Final

100 Percent Design Submittal
Shallow Groundwater Unit Remedial Action
Installation Restoration Program Site 24
Volatile Organic Compounds Source Area

FORMER MARINE CORPS AIR STATION
EL TORO, CALIFORNIA

March 2005

Prepared for:
Base Realignment and Closure
Naval Facilities Engineering Command
San Diego, California

Prepared by:
Weston Solutions, Inc.
1575 Treat Blvd, Suite 212
Walnut Creek, California

Prepared under:
Environmental Multiple Award
Contract Number N68711-01-D-6010
Contract Task Order 0004

WESTON SOLUTIONS

FINAL
100 PERCENT DESIGN SUBMITTAL

Shallow Groundwater Unit Remedial Action
Installation Restoration Program Site 24
Volatile Organic Compounds Source Area
Former Marine Corps Air Station
El Toro, California

March 2005

REGISTERED PROFESSIONAL ENGINEER
BERG KESHIAN
35071
Expires 6/30/06
CIVIL
STATE OF CALIFORNIA

Berg Keshian, P.E. — 3-21-05
Project QC Manager — Date

Approved by:

Tracy L. Walker, R.G. — 3-29-05
Senior Project Manager — Date

Approved by:

Emma P. Popek, Ph.D. — 3-30-05
Program Quality Control Manager — Date

Work Order Number 12954.002.004.0003.10
Contract Number N68711-01-D-6010
Contract Task Order 0004
Document Control Number 2019

FINAL
100 PERCENT DESIGN SUBMITTAL

Shallow Groundwater Unit Remedial Action
Installation Restoration Program Site 24
Volatile Organic Compounds Source Area
Former Marine Corps Air Station
El Toro, California

March 2005

Berg Keshian, P.E.
Project QC Manager

2/21/05
Date

Approved by:

Tracy L. Walker, R.G.
Senior Project Manager

REGISTERED GEOLOGIST
TRACY WALKER
No. 6808
Exp. 10/31/05
STATE OF CALIFORNIA

3/21/05
Date

Approved by:

Emma P. Popek, Ph.D.
Program Quality Control Manager

3/18/05
Date

Work Order Number 12954.002.004.0003.10
Contract Number N68711-01-D-6010
Contract Task Order 0004
Document Control Number 2019

TABLE OF CONTENTS

1. **INTRODUCTION** **1-1**
   - 1.1 PURPOSE, GOAL, AND SCOPE 1-1
   - 1.2 PROJECT DESCRIPTION 1-2
     - 1.1.1 SGU and Principal Aquifer 1-2
     - 1.2.1 Remedial Design 1-3
   - 1.3 SITE DESCRIPTION 1-3
   - 1.4 PROJECT SCHEDULE 1-4
   - 1.5 CONTRACTS AND AGREEMENTS 1-4
     - 1.5.1 Guidance Agreement 1-4
     - 1.5.2 Settlement Agreement 1-5
     - 1.5.3 Contract for the Shallow Groundwater Unit 1-5
     - 1.5.4 Periodic Reviews 1-6
   - 1.6 CURRENT AND FUTURE USE 1-7
   - 1.7 SITE CHARACTERIZATION 1-7
     - 1.7.1 Lithologic Data 1-7
     - 1.7.2 Potential Sources of Contamination 1-8
     - 1.7.3 Nature and Extent of Contamination 1-9
   - 1.8 PREVIOUS WORK 1-10
     - 1.8.1 Initial Investigation 1-10
     - 1.8.2 Phase I and Phase II RIs 1-10
     - 1.8.3 Feasibility Studies and Pilot Testing 1-11
     - 1.8.4 Vadose Zone Remediation, IRP Site 24 VOC Source Area 1-11
     - 1.8.5 Groundwater Modeling 1-12
     - 1.8.6 Pre-Design Investigation 1-13
2. **REMEDIAL ACTION OBJECTIVES** **2-1**
   - 2.1 NUMERICAL CLEANUP GOALS 2-1
   - 2.2 APPLICABLE OR RELEVANT AND APPROPRIATE REQUIREMENTS 2-1
     - 2.2.1 Chemical-Specific Applicable or Relevant and Appropriate Requirements 2-1
     - 2.2.2 Location-Specific ARARs 2-2
     - 2.2.3 Action-Specific ARARs 2-3
3. **ENGINEERING DESIGN** **3-1**
   - 3.1 SGU WELL FIELD DESIGN 3-1
   - 3.2 EXTRACTION WELL AND GROUNDWATER CONVEYANCE SYSTEM DESIGN 3-2

3.2.1 Mechanical Design Considerations 3-2
3.2.2 Electrical and Controls Design Considerations 3-9
3.2.3 Civil Design Considerations 3-13
3.2.4 Modified IDP System 3-15
3.3 INSTITUTIONAL CONTROLS 3-15
3.3.1 Land-Use Restrictions on Property Overlying the Plume 3-16
3.3.2 Additional Specific Requirements 3-16
3.4 IMPLEMENTATION OF INSTITUTIONAL CONTROLS 3-17
3.4.1 Environmental Restriction Covenant and Agreement (Chapter 6.5 and 6.8 of Division 20 of the California Health and Safety Code and California Civil Code Section 1471) 3-17
3.4.2 Environmental Restrictive Covenants in the Quitclaim Deed (California Civil Code Section 1471) 3-18
3.4.3 Monitoring and Reporting 3-19
3.5 SEISMIC AND WIND CALCULATIONS 3-20
3.6 DESIGN SPECIFICATIONS 3-20
4. IMPLEMENTATION 4-1
4.1 PROJECT ROLES AND RESPONSIBILITIES 4-1
4.1.1 Southwest Division Naval Facilities Engineering Command, San Diego 4-1
4.1.2 Base Closure Team 4-1
4.1.3 Remedial Design/Oversight Contractor 4-2
4.1.4 Remedial Design/Remedial Action Coordinator 4-2
4.2 PRE-MOBILIZATION ACTIVITIES AND SITE PREPARATION 4-4
4.2.1 Geophysical Surveys 4-4
4.2.2 Geotechnical Investigation 4-4
4.2.3 Permitting 4-5
4.3 WELL INSTALLATION 4-5
4.3.1 Drilling and Soil Sampling 4-5
4.3.2 Well Installation 4-5
4.3.3 Well Development 4-6
4.3.4 Well Contamination Prevention 4-7
4.3.5 Well Construction Sequencing 4-7
4.3.6 Well Vault Construction 4-7
4.4 PIPING NETWORK INSTALLATION 4-8
4.4.1 Trenching 4-8
4.4.2 Pipe Installation 4-9
4.4.3 Backfill and Resurfacing 4-9
4.4.4 Connection to Modified IDP System 4-10
4.5 ELECTRICAL CONNECTION 4-10
4.6 OTHER SITE OPERATIONS 4-10

4.6.1 Traffic Control and Site Security 4-10
4.6.2 Health and Safety Compliance 4-11
4.6.3 Decontamination 4-11
4.6.4 Remediation-Derived Waste Management 4-13

5. SYSTEM OPERATION 5-1

5.1 PROCESS CONTROL AND INSTRUMENTATION 5-1
5.1.1 System Description 5-1
5.1.2 Process Control 5-3
5.2 STARTUP 5-5
5.2.1 Initial Startup and Testing 5-5
5.2.2 Startup Procedure 5-7
5.2.3 Operation and Maintenance Plan 5-7
5.3 ROUTINE OPERATION AND MAINTENANCE 5-8
5.3.1 System Operation 5-8
5.3.2 Data Collection from System Instrumentation 5-8
5.3.3 Maintenance Requirements 5-9
5.3.4 Groundwater Sampling 5-10
5.3.5 Extraction and Conveyance System Performance Evaluation 5-11

6. GROUNDWATER REMEDIATION ENHANCEMENT USING SOIL VAPOR EXTRACTION 6-1

7. REMEDIAL PERFORMANCE MONITORING 7-1

7.1 PROPOSED MULTI-LEVEL MONITORING WELLS 7-3
7.2 HYDRAULIC CONTAINMENT MONITORING 7-4
7.3 AQUIFER RESTORATION MONITORING 7-4
7.4 COMPLIANCE WITH RAOS AND ECLS 7-5
7.5 SYSTEM OPTIMIZATION, MASS REMOVAL ENHANCEMENT AND REBOUND EVALUATION 7-6

8. SITE RESTORATION 8-1

8.1 PIPING ABANDONMENT 8-1
8.2 WELL ABANDONMENT 8-1

9. REFERENCES 9-1

FIGURES

Figure 1 Project Location Map

Figure 2 Site Plan

Figure 3 Project Schedule

Figure 4 Proposed SGU Extraction Well Locations

Figure 5 SVE Process Diagram

Figure 6 SGU Extraction and Monitoring Well Locations

Figure 7 Principal Aquifer Extraction and Monitoring Well Locations

Figure 8 Decision Flow Chart for Performance Monitoring Plan

Figure 9 Decision Flow Chart for Determining Groundwater Monitoring Frequency

TABLES

Table 1 ECLs for Contaminants of Concern in Groundwater

Table 2 Cleanup Standards for Contaminants of Concern in Groundwater

Table 3 Chemical-Specific ARARs for Remedial Action at IRP Site 24

Table 4 Location-Specific ARARs for Remedial Action at IRP Site 24

Table 5 Action- Specific ARARs for Remedial Action at IRP Site 24

Table 6 Screen Intervals for the Initial 35 SGU Extraction Wells

Table 7 Control Set Points and Response

Table 8 Wells To Be Used For Groundwater Remedy Enhancement Using SVE

Table 9 Wells Used in Operation and Maintenance Monitoring of the SGU Remedy

LIST OF APPENDICES

Appendix A	Evaluation Concentration Levels for Groundwater
Appendix B	Plate 1 - Map of TCE Plume, Extraction Wells, and Monitoring Wells
	Plate 2 - Lithologic Cross-Section along TCE Plume Axis
Appendix C	Design Drawings
Appendix D	Material Selection Report for Conveyance Piping
Appendix E	Equipment Seismic and Pump Size Calculations
Appendix F	Design Specifications
Appendix G	Response to Comments
Appendix H	Final Construction Quality Control Plan
Appendix I	Final Contingency Plan

ACRONYMS AND ABBREVIATIONS

(§)	Section
µg/L	microgram per liter
ARAR	applicable or relevant and appropriate requirements
BCT	BRAC Cleanup Team
BEC	BRAC Environmental Coordinator
bgs	below ground surface
BNI	Bechtel National, Inc
BRAC	Base Realignment and Closure
Cal/EPA	California Environmental Protection Agency
CCC	California Civil Code
CCMI	CERCLA Component of the Modified IDP
CCR	California Code of Regulations
CDWR	California Department of Water Resources
CERCLA	Comprehensive Environmental Response, Compensation, and Liability Act
CFR	Code of Federal Regulations
CLEAN	Comprehensive Long-Term Environmental Action Navy
CO	Contracting Officer
DCE	Dichloroethene
DHS	Department of Health Services (California)
DNAPL	dense, nonaqueous-phase liquids
DON	Department of the Navy
DOT	Department of Transportation, United States
DTSC	Department of Toxic Substances Control (Cal/EPA)
ECL	evaluation concentration level
EDR	Engineering Design Report
EPA	Environmental Protection Agency, United States
°F	Degree Fahrenheit
FFA	Federal Facilities Agreement
FOSET	finding of suitability for early transfer
FOSL	finding of suitability for lease
FOST	finding of suitability to transfer
FS	feasibility study
gpm	gallon per minute

ACRONYMS AND ABBREVIATIONS

HDPE	High-density polyethylene
HMI	human machine interface
IDP	Irvine Desalter Project
IRP	Installation Restoration Program
IRWD	Irvine Ranch Water District
JEG	Jacobs Engineering Group, Inc.
mA	milliAmps
MCAS	Marine Corps Air Station
MCL	maximum contaminant level
NFECSWSDIEGO	Southwest Division, Naval Facilities Engineering Command (formerly abbreviated as SWDIV)
O&M	operation and maintenance
OCHCA	Orange County Health Care Agency
OCWD	Orange County Water District
OU	Operable Unit
PCE	Tetrachloroethene
PDI	pre-design investigation
PDS	personal decontamination station
PID	Photoionization detector
PLC	programmable logic controller
POC	point of connection
PPE	personal protective equipment
psig	pound per square inch gauge
PVC	polyvinyl chloride
QA	Quality Assurance
QC	Quality Control
RA	remedial action
RAO	remedial action objective
RAWP	Remedial Action Work Plan
RCRA	Resource Conservation and Recovery Act
RD	remedial design
RDW	remediation-derived waste

ACRONYMS AND ABBREVIATIONS

RI	remedial investigation
ROD	record of decision
ROICC	Resident Officer in Charge of Construction
RPM	Remedial Project Manager
RWQCB	Regional Water Quality Control Board, Santa Ana
SAP	Sampling and Analysis Plan
SCADA	supervisory control and data acquisition
SCE	Southern California Edison
SEOR	system evaluation optimization report
SGU	shallow groundwater unit
SHSP	Site Health and Safety Plan
SOP	standard operating procedure
SSO	site safety officer
SVE	soil vapor extraction
SWPPP	storm water pollution prevention plan
TCE	trichloroethene
TDS	total dissolved solids
USACE	United States Army Corps of Engineers
USC	United States Code
UV	ultraviolet
VFD	variable frequency drive
VOC	volatile organic compound
WDR	Waste Discharge Requirement
WESTON	Weston Solutions, Inc.

1. INTRODUCTION

This Final 100 Percent Design Submittal of the Remedial Design (RD) provides the engineering design and drawings, specifications, and implementation methods for the remedial action (RA) at the volatile organic compound (VOC) source area of the shallow groundwater unit (SGU) at Operable Unit (OU)-2A, Installation Restoration Program (IRP) Site 24, at former Marine Corps Air Station (MCAS) El Toro.

This RD was prepared for Southwest Division Naval Facilities Engineering Command (NFECSW SDIEGO), under Task Order No. 0004 of the Environmental Multiple Award Contract No. N68711-01-6010. It complies with the Comprehensive Environmental Response, Compensation, and Liability Act (CERCLA), as amended by the Superfund Amendments and Reauthorization Act of 1986, and the National Oil and Hazardous Substances Pollution Contingency Plan in Title 40 of the Code of Federal Regulations (CFR), Part 300, and California Health and Safety Code, Section 6.8.

The *90 Percent Design Submittal* was prepared (WESTON, 2004) and submitted to the Department of the Navy (DON), the United States Environmental Protection Agency (EPA), the California Environmental Protection Agency (Cal/EPA) Department of Toxic Substances Control (DTSC), and the Santa Ana Regional Water Quality Control Board (RWQCB) in June 2004.

1.1 PURPOSE, GOAL, AND SCOPE

The purpose of the remedial action is to remove VOCs in the SGU pursuant to the *Final Record of Decision (ROD) for OU 1, Site 18 – Regional VOC Groundwater Plume OU 2A, Site 24 – VOC Source Area* (DON, 2002).

The goal of the design process is to produce plans that will accomplish the stated purpose in a cost-effective manner based on sound engineering principles.

1.2 PROJECT DESCRIPTION

1.1.1 SGU and Principal Aquifer

The ROD addressed groundwater at IRP Sites 18 and 24 together because VOCs in the principal aquifer at Site 18 and in the shallow groundwater unit at Site 24 originated in the vadose zone at Site 24. Former MCAS El Toro lies within the Irvine Forebay I Groundwater Subbasin (Irvine Subbasin). Investigation results demonstrated that VOCs migrated from their source at the Site 24 surface or subsurface to the shallow groundwater unit below. Downgradient of Site 24, the VOCs migrated into the principal aquifer to form the regional groundwater plume of Site 18. IRP Site 24 is in the southwest quadrant of the former station (Figure 1). The shallow groundwater plume associated with Site 24 originates at this site and extends off-station approximately to Sand Canyon Avenue. IRP Site 18 consists of the portion of the plume that extends off-station from the westernmost boundary of former MCAS El Toro approximately 3 miles west beneath the city of Irvine.

IRP Site 24 comprises two media: soil and groundwater. Contaminated soil at IRP Site 24 was addressed previously using soil vapor extraction (SVE) to remove VOC contamination, and a closure report was submitted to the Base Realignment and Closure (BRAC) Cleanup Team (BCT) (Earth Tech, 2002). The remedial action for the groundwater at Sites 18 and 24 includes extraction and treatment, as well as institutional controls (DON, 2002). The following remedial action objectives (RAOs) were established for groundwater at IRP Sites 18 and 24:

IRP Site 18

- Reduce concentrations of VOCs in the area of concern in the SGU and in the principal aquifer downgradient of the source areas to federal or state cleanup levels.
- Contain migration of VOCs above cleanup levels in the principal aquifer.
- Prevent domestic use of groundwater containing VOCs at concentrations above cleanup levels.

IRP Site 24

- Reduce concentrations of VOCs in the Site 24 SGU to federal or state cleanup levels.
- Prevent use of groundwater containing VOCs at concentrations above cleanup levels.

- Prevent VOCs at concentrations above cleanup levels from migrating beyond the SGU.

The VOC plume will be remediated by pump and treat methodology using groundwater extraction wells. The extraction well flow rates and locations were designed based on groundwater flow and contamination plume modeling (Earth Tech, 2003b) In addition, the Orange County Water District (OCWD) and Irvine Ranch Water District (IRWD) are conducting a parallel remedial design to address IRP Site 18, the principal aquifer plume, per the ROD (DON, 2002) and the settlement agreement (Settlement Agreement Among the Settling Federal Agencies, OCWD, and IRWD in regard to former MCAS Groundwater Remediation of September 7, 2001). Extracted groundwater from both Sites 18 and 24 will be treated at the modified Irvine Desalter Project (IDP) facility to remove VOCs using air stripping and activated carbon adsorption (DON, 2002). The modified IDP is a proposed water supply development project initiated by OCWD and IRWD. This RD addresses only the VOC contaminated groundwater within the SGU at IRP Site 24.

1.2.1 Remedial Design

The remedial design incorporates results from the groundwater flow and transport modeling (Earth Tech, 2003b) and the pre-design investigation that confirmed the extent of the on-station plume and input assumptions used in the groundwater model (Earth Tech, 2004b)

As part of the engineering design, a piping network has been designed to convey the extracted groundwater from the extraction wells to the treatment plant. The alignment of the conveyance system has been designed to protect and minimize relocation of existing subsurface utilities and reduce head losses to optimize pumping performance and cost effectiveness, while meeting minimum velocity requirements.

1.3 SITE DESCRIPTION

Former MCAS El Toro is located in a semi-urban, agricultural area of southern California, approximately 8 miles south of Santa Ana and 12 miles northeast of Laguna Beach (Figure 1).

IRP Site 24 is located in the southwest quadrant of former MCAS El Toro and encompasses approximately 200 acres (Figure 2). Planned future land-use at the former Marine air base consists of both residential and industrialized areas. The center of the former station consists of two runways surrounded by former aircraft maintenance and support facilities, including two large aircraft hangars (Buildings 296 and 297) that were identified as the source of the VOC contamination.

1.4 PROJECT SCHEDULE

Consistent with the Federal Facilities Agreement (FFA) deliverables schedule, the RD will be reviewed by the BCT at three stages. The RD work plan (30 Percent Design) was prepared and submitted by Earth Tech to the BCT for review in April 2003. The 90 percent design (WESTON, 2004) was prepared by Weston Solutions, Inc. (WESTON) and submitted to the BCT in June 2004. This Final 100 Percent Design Submittal has been prepared by WESTON for submittal in March 2005.

Installation of the extraction wells and construction of the conveyance system is currently scheduled to occur between February 26, 2005 and July 10, 2005. A current project schedule is presented in Figure 3.

1.5 CONTRACTS AND AGREEMENTS

1.5.1 Guidance Agreement

Former MCAS El Toro is a federal facility and is on the National Priorities List of the Superfund Program. The lead agency for remedial investigation (RI) and RA at this facility is the DON. Regulatory agencies providing support and oversight include the EPA, Cal/EPA, DTSC, and RWQCB. The DON, EPA, DTSC, and RWQCB entered into a FFA for former MCAS El Toro in 1990 and formed the BCT. The role of the BCT is to manage and coordinate environmental restoration and compliance programs related to the closure and disposal of former MCAS El Toro.

1.5.2 Settlement Agreement

The DON, OCWD, and IRWD have reached a settlement agreement regarding modification of the IDP to accept and treat groundwater from IRP Site 24 for VOC removal. Treatment of extracted groundwater contaminated with VOCs is considered the CERCLA component of the modified IDP (CCMI). Groundwater extracted from the SGU will be transported to the modified IDP for treatment. This agreement has been incorporated and is part of the ROD for OU-1 and OU-2A (DON, 2002). According to this agreement, the United States government will bear the VOC treatment costs, and OCWD and IRWD will continue to bear the costs associated with reclaimed water supply treatment requirements, including those for total dissolved solids (TDS) and nitrates. The conceptual modified IDP that is to receive and treat VOCs is referred to in the settlement agreement as the modified IDP. The agreement specifies the baseline quantity and quality of contaminated water that can be accepted/treated by the modified IDP and is independent of the cleanup criteria established for Site 24 or previous groundwater contaminant detections. These groundwater quality parameters are referred to as evaluation concentration levels (ECLs) for VOCs. Table 1 presents a summary of the ECLs for the primary constituents of concern, namely VOCs, at the point of connection (POC) of the DON's SGU conveyance pipeline to the pipe that will transport the groundwater to the modified IDP. The proposed POC for the SGU conveyance pipeline to the IDP is near the southwest corner of the former station. A full list of ECLs is provided in Appendix A of this document. The list of ECLs was obtained from Appendix E of the settlement agreement that was included in the ROD as Attachment E (DON, 20020).

The settlement agreement also specifies that the DON, OCWD, and IRWD will exchange copies of all validated reports of analytical data collected from groundwater monitoring wells, station extraction wells, and modified IDP production wells within 60 calendar days after such reports become available.

1.5.3 Contract for the Shallow Groundwater Unit

The DON, OCWD, and IRWD have entered into a separate contract for the OCWD and IRWD to accept, treat, and take ownership of the lesser of the volume furnished by the DON or 208,000,000 gallons per year at a maximum flow of 440–550 gallons per minute (gpm)

from the SGU. The OCWD and IRWD are required to provide VOC treatment services regardless of whether or not the groundwater can be used for a reclaimed water supply. If the OCWD and IRWD determine that the groundwater cannot be used for the reclaimed water supply after treatment, the OCWD and IRWD will be responsible for otherwise disposing of the treated groundwater at no additional cost to the DON. This contract is expected to remain in effect until the EPA, DTSC, and RWQCB agree that the requirements of the ROD (DON, 2002) for cleanup of the SGU have been met. According to the contract, permanent termination of SGU treatment activities before the completion of remediation at IRP Site 24 by the OCWD and IRWD will be considered a breach of contract unless the DON is relieved of its obligation to the EPA, DTSC, and RWQCB to remediate VOC contamination in the SGU by an amendment to the ROD.

1.5.4 Periodic Reviews

As required by CERCLA Section 121 (c) and consistent with DON policy, periodic reviews of Superfund sites will occur at least once every 5 years. The purpose of a five-year review is to determine whether the remedy at a site is, or upon completion will be, protective of human health and the environment. The technical assessment of the remedy will examine the following questions:

1. Is the remedy functioning as intended by the decision documents? The review at IRP Site 24 is expected to focus on whether the institutional controls are in place and are sufficient to assure protection of human health and the environment, and whether groundwater remediation is reducing contaminant concentrations and preventing migration of VOCs.
2. Are the exposure assumptions, toxicity data, and remedial action objectives used at the time of the remedy still valid?
3. Has any other information come to light that could call into question the protectiveness of the remedy?

The five-year review will be conducted by the DON, who will subsequently prepare and submit a report to the regulatory agency members of the BCT for review. The report will: 1) clearly state whether the remedy is expected to be protective; 2) document any deficiencies identified during the review; and, 3) recommend specific actions to ensure that the remedy will continue to be protective (DON, 2001). If necessary, the five-year report

will include descriptions of follow-up actions to achieve, or to continue to ensure, protectiveness, along with a timetable for these actions.

1.6 CURRENT AND FUTURE USE

A majority of the land immediately surrounding former MCAS El Toro has been used for plant nursery and agricultural activities. Areas located to the south, southeast, and southwest have been developed for commercial, light industrial, and residential uses. Future land uses of former MCAS El Toro are expected to include commercial, light industrial, park/recreational, and residential.

According to the Santa Ana Region Basin Plan, the groundwater beneath former MCAS El Toro has potential beneficial uses as municipal, agricultural, industrial, and industrial process water supplies (RWQCB, 1995). Groundwater near former MCAS El Toro is mostly used for irrigation of agricultural and greenbelt areas (i.e., parkways and parks). Potable water in the area is imported from various sources, and the remainder comes from local resources, including groundwater. In addition to the modified IDP, IRWD has also identified wells 51/52 and the Frances Mutual in the Irvine Subbasin for future potable water supplies.

1.7 SITE CHARACTERIZATION

1.7.1 Lithologic Data

The subsurface lithology at former MCAS El Toro consists of unconsolidated alluvial and stream-channel sediments overlying sandstone and siltstone bedrock. Holocene materials consist of isolated coarse-grained, stream-channel deposits contained in a matrix of fine-grained overbank deposits up to 300 feet in thickness (Herndon and Reilly, 1989). Holocene alluvial sediments overlie interlayered Pleistocene lagoonal and nearshore marine deposits. The Quaternary (Holocene and Pleistocene) deposits consist of a heterogeneous mixture of silts and clays with interbedded sands and fine gravels.

1.7.2 Potential Sources of Contamination

The VOCs in soil and groundwater at IRP Site 24 may have originated from solvents containing trichloroethene (TCE) and tetrachloroethene (PCE) that were used at the former base until approximately 1975. The precise origin, nature, and use of solvents released at the site and the specific circumstances and quantities of individual releases are not documented (BNI, 1998b). Active VOC sources are believed to no longer exist at the site. Potential subsurface and surface sources of VOC contamination were identified by reviewing the Resource Conservation and Recovery Act (RCRA) Facility Assessment Report (JEG, 1993a) and Phase I RI data (JEG, 1993b); reviewing station records; conducting interviews with former operations staff involved with solvent storage, use, and disposal; and inspecting facilities within IRP Site 24 (BNI, 1998a).

Potential subsurface source areas are located where permanent, man-made facilities designed into the infrastructure may have directed solvents to precise locations (point sources) of release. These include former degreaser pits and solvent tanks, storm drain lines, industrial wastewater lines, vehicle wash racks with associated drains and sumps, and underground storage tanks. These are areas and features where releases may have occurred at discrete point-source locations, at regular intervals, and directly into the subsurface. These facilities were designed to handle industrial waste at regular intervals as a function of the industrial activities they supported.

Potential surface sources of VOC contamination are located where practices, as opposed to infrastructure, resulted in intermittent releases at different locations on the station. These types of potential releases may have occurred at random locations on the ground surface because of aircraft washing, temporary waste storage, handling and disposal practices, surface runoff, and dust-suppression activities. Potential surface sources include hazardous waste storage areas, ditches that collected runoff adjacent to paved areas, areas where solvents may have been used with water for aircraft washing, and open areas of the ground where occasional dumping of liquid waste may have occurred. An aerial photograph of IRP Site 24 from 1980 was compared to shallow (0–20 feet below ground surface [bgs]) soil gas TCE concentrations from the Phase I RI. Correlations were found between areas with high

subsurface concentrations of TCE and visible evidence of storage areas at the surface (BNI, 1998b).

1.7.3 Nature and Extent of Contamination

The contaminants of concern at IRP Site 24 are VOCs, which are present in the soil and groundwater. The most commonly reported VOCs from samples collected in the project area are TCE, PCE, Freon 113, 1,1-dichloroethene (DCE), and carbon tetrachloride. A TCE plume map and lithologic cross-section along the axis of the plume have been included in Appendix B (Plate 1 and Plate 2).

The horizontal and vertical extent of VOCs in the vadose zone was characterized using soil gas sampling and analysis (BNI, 1998b). This characterization showed that the primary VOC source was present beneath Buildings 296 and 297, extending to the south with decreasing concentrations to the southern station boundary. Several smaller source areas existed in the soil beneath IRP Site 24, including a PCE soil gas plume located west of Building 297. The VOC concentrations in soil gas generally increased with depth, and the highest concentrations occurred near the water table. Measured soil gas and groundwater TCE concentrations demonstrated that TCE mass flux was from the vadose zone toward the groundwater, suggesting a depleting source at the surface that is consistent with the assumed end of TCE usage circa 1979.

The horizontal extent of VOCs in groundwater was characterized using Phase I RI data combined with additional Phase II monitoring well and HydroPunch analytical data, and regularly scheduled groundwater monitoring events conducted at the station. This characterization showed that VOCs from the soils at IRP Site 24 have impacted shallow groundwater beneath the site, but the deeper groundwater or principal aquifer is not affected beneath IRP Site 24. However, the principal aquifer west of the station boundary has low-level TCE contamination. Other VOCs were found in the groundwater, but only within the TCE plume.

The existence of dense, nonaqueous-phase liquids (DNAPL) at the site was investigated during the Phase I and II RIs because solvents in this form were formerly used at the station

as cleaning and degreasing agents. The conclusions reached by both investigations were consistent in that there was insufficient evidence to confirm the presence of DNAPLs at IRP Site 24 (DON, 2002). The VOC concentrations detected in soil, soil gas, and groundwater were well below the levels expected (EPA, 1991) if an active DNAPL source was present at the site.

1.8 PREVIOUS WORK

1.8.1 Initial Investigation

The first indication of contamination at former MCAS El Toro occurred during routine water quality monitoring in 1985, when OCWD discovered TCE in groundwater at an irrigation well approximately 3,000 feet downgradient of the former station. Following this, the DON began work on an Initial Assessment Study (Brown and Caldwell, 1986) to locate potentially contaminated sites on the former station.

From June 1989 to September 1993, an interim groundwater pump-and-treatment system was in operation at the boundary of the former station. Extracted groundwater had reported concentrations of TCE ranging from 10 to 160 micrograms per liter (µg/L) and PCE ranging from 25 to 100 µg/L. The extracted groundwater was treated with a granular-activated-carbon adsorption system and used to irrigate the station golf course. The pump-and-treatment system was shut down in September 1993 (JEG, 1996a).

1.8.2 Phase I and Phase II RIs

The Phase I RI was initiated by the DON in December 1989, and the results were documented in a draft report in 1993 (JEG, 1993b). Contaminants were identified in the groundwater, soil, surface water, and sediments at the former MCAS El Toro. Contaminants in the soil consisted primarily of low concentrations of semivolatile organic compounds, petroleum hydrocarbons, pesticides, herbicides, and polychlorinated biphenyls. During the Phase I RI, the source of contamination for regional groundwater was found to be in the southwest quadrant of the former station (IRP Site 24) (JEG, 1993b)

The Phase II RI/Feasibility Study (FS) was initiated in 1995 using the results of the Phase I RI as baseline data. The Phase II RI, conducted in 1995 and 1996, demonstrated that soil at IRP Site 24 was the source of the regional VOC contamination and that human health risk from exposure to the groundwater exceeded EPA guidelines (BNI, 1997b)

1.8.3 Feasibility Studies and Pilot Testing

RAOs for IRP Sites 18 and 24 were developed during the Phase II RI. The FS for groundwater at IRP Site 18 (JEG, 1996b) and FSs for soil and groundwater at IRP Site 24 (BNI, 1997a,c) identified and screened technologies to develop remedial alternatives capable of achieving the RAOs. Groundwater extraction and treatment was the technology selected for both sites to permanently remove VOCs from the shallow aquifer. SVE was recommended as an effective technology for the removal of VOCs from the soil at IRP Site 24 (DON, 1997).

Pilot test data from small-scale groundwater extraction (BNI, 1997c) and SVE tests (BNI, 1997d) were used to support the FS evaluations. Investigations performed during groundwater pilot testing helped demonstrate the migration pathway of VOCs from the SGU to the principal aquifer (DON, 2002). In addition, the pilot test data demonstrated that sustainable extraction rates in the range of 5 - 40 gpm could be achieved in the extraction wells around Buildings 296 and 297

1.8.4 Vadose Zone Remediation, IRP Site 24 VOC Source Area

In accordance with the *Draft Final Interim ROD for OU-2A – Site 24 VOC Source Area, Vadose Zone* (DON, 1997), the *Draft Final Engineering Design Report* [EDR] *Vadose Zone Remediation at IRP Site 24* (BNI, 1998a), and the *Draft System Evaluation and Optimization Report (SEOR), IRP Site 24 Vadose Zone Remediation* (Earth Tech, 1999), remediation of the vadose zone source area was implemented in April 1999. SVE was performed in three designated depth zones as outlined in the SEOR and the EDR:

- Shallow zone (0–40 feet bgs)
- Intermediate zone (40–70 feet bgs)
- Deep zone (70–115 feet bgs)

A total of 54 SVE wells were operated between May 1999 and February 2000. Of those wells, 15 were triple-completion, 12 were dual-completion, and 27 were single completion wells. At the end of February 2000, all soil gas concentrations for contaminants of concern had declined to less than the following threshold cleanup concentrations established in the ROD (DON, 2002):

- TCE at 27 µg/L
- PCE at 69 µg/L
- Carbon tetrachloride at 563 µg/L
- 1,1-DCE at 563 µg/L
- Chlorofluorocarbon-113 at 234,000 µg/L

Rebound samples collected from selected wells after 7 months of shutdown (in September 2000) remained below soil-gas threshold concentrations. The *Draft Final Site Closure Report, Vadose Zone Remediation, IRP Site 24, Volatile Organic Compounds Source Area* was issued in June 2002 (Earth Tech, 2002). FFA signatories concurred with the recommendation of no further action presented in the vadose zone closure report.

1.8.5 Groundwater Modeling

Simulation of groundwater flow and VOC transport in the shallow and principle aquifer units within the Irvine Subbasin has been performed to identify groundwater extraction strategies pursuant to the OU-1 and OU-2A ROD (DON, 2002). The final groundwater modeling technical memorandum was issued in October 2003 (Earth Tech, 2003b).

The model assumes sustainable extraction flow rates of 10 gpm per well within IRP Site 24, and 20 gpm per well along the station boundary. However, due to the lithologic heterogeneity of the SGU, the flow rates assigned to the extraction wells represented a significant source of model uncertainty. In addition, uncertainty existed in the vertical and horizontal distribution of TCE within the plume (Earth Tech, 2003b). These uncertainties were addressed during the pre-design investigation as described below.

1.8.6 Pre-Design Investigation

A pre-design investigation (PDI) was conducted by Earth Tech to reduce modeling uncertainties by further defining contaminant plume, aquifer characteristics, and to aid in the design of the selected groundwater remedy (Earth Tech, 2004b). The PDI included installation of two monitoring wells and ten extraction wells, groundwater sampling, and aquifer tests to estimate sustainable pumping rates. In addition, the PDI examined the potential for groundwater treatment enhancement using SVE and conducted surveying and pot-holing along the proposed conveyance pipe route to identify underground utilities and obstructions.

The results of the PDI were presented in the *Final Technical Memorandum, Pre-Design Investigation for Shallow Groundwater Unit Remedy, IRP Site 24, Volatile Organic Compound Source Area* (Earth Tech, 2004b) and are summarized below.

PDI Objectives

Groundwater sampling and extraction testing conducted at IRP Site 24 achieved the objectives of the pre-design investigation:

- Reduce uncertainties in the groundwater model by evaluating sustainable extraction rates and vertical VOC plume distribution.
- Assess whether SVE would be a technically feasible and cost-effective enhancement to the groundwater remedy.
- Select a layout for the conveyance pipe network.

Plume Delineation

Groundwater sampling using passive diffusion bags and the low-flow sampling method indicated that the plume is homogeneous with little stratification. Results are consistent with historical sampling results and plume delineation. The configuration of the TCE plume in the shallow groundwater unit has been modified slightly as follows based on the sampling results obtained from this pre-design investigation and the Round 17 *GMR* (CDM, 2003):

- The southern boundary of the 50-µg/L contour has been shifted north of well 24EX12A.

- The 5-µg/L extent at the northern boundary has been shifted south of 18_TIC55 and 24MW07.

Consistent with historical sampling results, the high TCE concentrations (above 50 µg/L) are found mainly in the upper portion of the SGU, from the potentiometric surface (approximately 80-100 feet bgs) to approximately 180 feet bgs. TCE concentrations in excess of the MCL are present to a maximum depth of approximately 210 feet bgs, within the lower portion of the SGU. Three hot spots were identified at IRP Site 24:

- One located near well 24EX60B2 (maximum TCE concentration of 960 µg/L)
- One located near wells 24MW03 and 09_DGMW75 (maximum TCE concentration of 1,270 µg/L at 24MW03)
- One located at well 24EX30Bl (maximum TCE concentration of 520 µg/L)

Sustainable Extraction Rate

Sustainable extraction rates at IRP Site 24 were obtained from a series of step-drawdown tests and 72-hour extraction tests. Extraction rates for the 72-hour tests ranged from 14 gpm to 40 gpm at the source area, 6.5 gpm to 41 gpm at the second hot spot near 09_DGMW75 and 24MW03, and approximately 15 gpm to 36 gpm at the station boundary. However, long-term extraction rates are expected to be lower as dewatering progresses. A screen slot size of 0.035-inch is appropriate for SGU extraction wells. Lithology is the apparent main limiting factor of sustainable flow rate.

Estimated transmissivity values range from 180 feet^2/day at 24EXll to 5,100 feet^2/day at 24EX13A, consistent with values used in the OU-l and OU-2A groundwater model.

Mass Removal Enhancement Using SVE

Mass removal rates estimated by the SVE test indicate that SVE may be a cost-effective option to enhance the groundwater remedy. The DON will utilize SVE for mass removal enhancement during implementation of the SGU remedy. SVE will be performed in the VOC source area hot spots after sufficient dewatering has occurred as a result of groundwater extraction.

2. REMEDIAL ACTION OBJECTIVES

As stated in Section 1, the remedial action for the groundwater unit at IRP Site 24 is extraction, treatment, and institutional controls (DON, 2002). The site-specific RAOs for IRP Site 24 are as follows:

- Reduce VOC concentrations in the IRP Site 24 SGU to federal or state cleanup levels.
- Prevent the use of groundwater containing VOCs at concentrations above cleanup levels.
- Prevent the migration of VOCs beyond the SGU at concentrations above cleanup levels.

2.1 NUMERICAL CLEANUP GOALS

The RAOs for IRP Site 24 as per the ROD are intended primarily to ensure the continued beneficial use of groundwater from the principal aquifer (DON, 2002). Groundwater from the principal aquifer is currently used for agriculture, but is also designated by the RWQCB as a potential source of drinking water. Table 2 presents numerical cleanup standards for groundwater established by the ROD. These standards are based on EPA and Cal/EPA maximum contaminant levels (MCLs) or were developed using risk-based criteria.

2.2 APPLICABLE OR RELEVANT AND APPROPRIATE REQUIREMENTS

2.2.1 Chemical-Specific Applicable or Relevant and Appropriate Requirements

Chemical-specific applicable or relevant and appropriate requirements (ARARs) are health- or risk-based numerical values or methodologies that, when applied to site-specific conditions, establish the acceptable amount or concentration of a chemical that may be found in, or discharged to, the ambient environment. If a chemical has more than one cleanup level, the most stringent level will be identified as an ARAR for this remedial action. Table 3 summarizes the chemical-specific ARARs. The substantive provisions of the following requirements were identified as the most stringent of the federal and state groundwater ARARs for the remedial action at IRP Site 24 (DON, 2002):

- RCRA groundwater protection standards in Title 22 of the California Code of Regulations (CCR)
- Federal MCLs listed in the Safe Drinking Water Act
- State primary and secondary MCLs in Title 22 CCR
- Water Quality Control Plan for the Santa Ana Region (RWQCB, 1995) (specifying water quality objectives, beneficial use, and waste discharge limitations)

The most stringent of these requirements are the RCRA groundwater protection standards and Title 22 CCR Section (§) 66264.94, which require restoration of affected groundwater to background conditions, if possible, or else attain the best water quality that is technically and economically feasible.

2.2.2 Location-Specific ARARs

Location-specific ARARs are restrictions on the concentrations of hazardous substances or on the conduct of activities solely because they are in specific locations. Special locations include floodplains, wetlands, historic places, and sensitive ecosystems or habitats. The selected remedial action will be implemented in compliance with location-specific ARARs.

Because some of the proposed groundwater extraction or monitoring wells may be located within a 100-year floodplain, actions within the floodplain will be required to avoid adverse effects, minimize potential harm, and restore and preserve natural and beneficial values. None of the planned activities should have adverse effects on the floodplain. However, the substantive provisions of the following requirements were identified as the most stringent of the potential federal and state location-specific ARARs for remedial actions at IRP Site 24:

- Title 22 CCR § 66264.18(b) (Hazardous Waste Control Act)
- 40 CFR Part 6, Appendix A (excluding Sections 6[a][2], 6[a][4], 6[a][6]), and 6.302 (Executive Order 11988 Protection of Floodplains)
- 16 United States Code (USC) 469(a)(1) (National Archaeological and Historical Preservation Act)

Table 4 summarizes the location-specific ARARs and addresses how the ARARs will be addressed during the design process.

2.2.3 Action-Specific ARARs

Action-specific ARARs are technology- or activity-based requirements or limitations for remedial activities. These requirements are triggered by particular remedial activities conducted at the site. Action-specific ARARs include but are not limited to RCRA and the following substantive provisions:

- California Civil Code (CCC) 1471
- California Health & Safety Code 25202.5, 25222.1, and 25233 (c)
- South Coast Air Quality Management District Rule 1401

Table 5 summarizes the action-specific ARARs and addresses how the ARARs will be complied with during remedy implementation.

3. ENGINEERING DESIGN

3.1 SGU WELL FIELD DESIGN

In accordance with the ROD, the well field design was updated and finalized. The design of the extraction well field for the SGU at IRP Site 24 is based on results of the extensive groundwater modeling (Earth Tech, 2003b) and the pre-design investigation (Earth Tech, 2004b). The modeling included simulation of groundwater flow and VOC transport in the shallow and principle aquifer units within the Irvine Subbasin. The primary objective of the model was to select extraction well locations within the shallow aquifer to fulfill RAOs within an average combined extraction rate of 400 gpm. The extraction rate is based on the OU-1 and OU-2A ROD (DON, 2002), which states "the modified IDP treatment plant will accept the lesser of the volume furnished by the DON or 208,000,000 gallons per year at a rate of 440 gpm through 550 gpm or such other rate as agreed to by the parties." The 208,000,000 gallons per year is approximately equivalent to an annual average flow rate of 395 gpm. The pre-design investigation results show that the VOC distribution and extraction rates are consistent with the model.

Based on the modeling effort, the well field layout focuses on mass removal within areas of highest VOC concentrations (i.e., IRP Site 24 source area) with progressive downgradient extraction and hydraulic containment. The system will consist of 39 new groundwater extraction wells and four existing monitoring wells that will be converted to groundwater extraction wells to enhance the groundwater remedy SVE mass removal. Initial installation will include 35 extraction wells plus the conversion of four wells dedicated to enhance mass removal using SVE. After approximately 30-40 years, four more extraction wells will be installed along the former station boundary to capture expected future migration. Drawing C-1 in Appendix C shows the 39 new extraction wells and the four existing wells to be used to enhance mass removal using SVE. Table 6 presents the estimated well completion details for the 35 new SGU extraction wells to be installed initially under this remedial action. The wells located near the SGU hot spots (wells 24SGU01 through 24SGU25) are designed to maximize mass removal. Therefore, the screen intervals span from the water table to the vertical 5 µg/L TCE limit, and are located primarily within the 50 µg/L TCE zone. Further

downstream, the wells are alternately screened within the upper and lower SGU for hydraulic capture in the 5µg/L TCE zone. The well screen depths will be confirmed in the field after evaluating the lithology at each location.

3.2 EXTRACTION WELL AND GROUNDWATER CONVEYANCE SYSTEM DESIGN

The extraction and conveyance system presented in this document is designed to extract TCE-contaminated groundwater from the SGU wells and pump it to the modified IDP for treatment The extraction and conveyance system consists of four main components:

- Extraction well field
- Conveyance piping
- Pump station (i.e., compound)
- Monitoring well network

Design criteria and specifications for operational units and ancillary systems are provided in Appendix F to this Design Submittal.

3.2.1 Mechanical Design Considerations

Mechanical design components include the well, downwell equipment, and wellhead components including the discharge piping, valves, level sensor, and flow meter/totalizer. Detail drawings of well and well vault construction and layout are provided in Appendix C Also included in the mechanical design are conveyance pipe material selection and sizing. Material selection was based on the technical report (included in Appendix D) researched and prepared by Earth Tech Calculations for pump sizing are provided in Appendix E WESTON added, as a factor of safety to the calculated pump head, a summary of pump head with selected Grundfos Model S Series pumps for each well. This pump head summary is shown in Appendix E.

3.2.1.1 Codes, Standards, and References

Equipment, materials, and installation will conform to good engineering practice and applicable codes and standards. Applicable codes and standards are listed in the project specifications as provided in Appendix F.

3.2.1.2 Materials of Construction

The construction materials of pumps, well casings and screens, and conveyance piping are subject to the following criteria:

- An anticipated minimum of 50 years of service
- Compatibility with the contaminants of concern
- Field installation methods and sequence considerations, such as installation methods to discourage biofouling
- Minimization of maintenance requirements, such as protection from excessive corrosion, encrustation, and fouling
- Ability to withstand maintenance procedures such as wire brushing, swabbing, sonic jetting, chemical treating, surging, and baling

3.2.1.3 Extraction Wells and Wellhead Completions

The extraction wells will be constructed according to the construction specifications and as shown in Drawing M-1, Appendix C. Extraction wells will be built to maximize groundwater extraction efficiency based on the following criteria:

- 6-inch casing diameter
- 316 stainless-steel blank casing
- 316 stainless-steel, continuous-wrap well screen with a 0.035-inch slot size to maximize the open area and retain filter pack
- Placement of screens to maximize hydraulic capture and minimize biofouling
- Centralizers installed at 20-foot intervals
- Filter pack to match formation attributes
- Minimum of 3 feet of bentonite seal placed above the filter pack
- Cement grout mixed with 5 percent bentonite installed above the bentonite seal to the well vault
- Disinfection of drilling solution and filer pack to follow Specification 02525 (Well Installation)

The wells will be equipped with the following:

- A pressure transducer for groundwater level measurement
- A submersible electrical pump
- A well cap made of Schedule 80 polyvinyl chloride (PVC) and equipped with ports for the pump power cable, pressure transducer and discharge pipe, sounding tube, and an eyebolt for the pump support cable

The discharge from the pump will be connected to a Schedule 80 PVC threaded pipe of equal inside diameter, capable of handling the maximum pressure from the pumps. The type of pipe was selected based on the discussion on material compatibility with groundwater contaminants presented in Appendix D, which indicates the low concentration of contaminants will not affect material integrity At the wellhead, the discharge pipe will be coupled to Schedule 80 PVC pipe. The pipe will be equipped with a sample port, a globe valve, flow meter/totalizer, and check valve, and will be connected to the underground conveyance pipe via a PVC-to-HDPE transition fitting or flanges. The valves will provide flow control and section isolation, so that individual well maintenance can be performed.

The following is an equipment list for the well and vault components, excluding the extraction pump, which is described in Section 3.2.1.4:

1. **Pump Discharge and Wellhead Transfer Pipe**
   Purpose: Pipe to transfer groundwater from pump to wellhead (inside well)
   Pressure rating: 240 pounds per square inch gauge (psig) minimum
   Sizes: 1 inch to 1.5 inch nominal outside diameter
   Product: Schedule 80 PVC pipe conforming to ASTMD-1784 Class 12454-B

2. **Well Cap**
   Purpose: Well cover to accommodate down-well equipment
   Material: PVC conforming to ASTMD-1784 Class 12454-B
   Custom items: Well cover shall have holes drilled for down-well equipment and supplied with appropriate fittings without affecting well cover strength. Well cover to accommodate AC power cable, pump discharge hose, cable for pressure transmitter, sounding tube, and pump support cable

3. **Flow Meter/Totalizer**
   Purpose: An inline flow meter capable of measuring and transmitting instantaneous groundwater flow rates and tracking total volume of groundwater discharged from the extraction well
   Description: 1-inch diameter, magnetic flowmeter, flange connections, accuracy of ±0.5% (full range), 4-20 milliamps (mA), range of 5–50 gpm, rated for 150 psig at 120 degrees Fahrenheit (°F)
   Product: Sparling Tigermag FM625 or similar

4. **Flow Control Valve**
   Purpose: To control pump discharge rate from well
   Type: Globe
   Material: PVC flanged with EPDM seals
   Pressure rating: 150 psig at 120 °F
   Connection: Flange
   Size: 1-inch nominal at well heads
   Product: ASAHI America Model #1262-010

5. **Check Valve**
   Purpose: Prevent backflow into well; installed downstream of flow meter
   Type: check (ball)
   Material: PVC with EPDM seals
   Pressure rating: 150 psig at 70 °F
   Connection: Flange or true union
   Size: Pipe nominal outside diameter
   Product: ASAHI America

6. **Sample Port Valve**
   Purpose: Collect groundwater samples
   Type: Ball
   Material: Nylon
   Pressure rating: 125 psig at 120 °F
   Port: Full
   Union: True union (double union)
   Connection: NPT with Barb
   Size: .025-inch pipe size
   Product: McMaster-Carr or similar

7. **Pressure Transducer for Water Level Measurement**
   Purpose: measure groundwater level and transmit a signal to the supervisory control and data acquisition (SCADA) system for remote monitoring and data acquisition
   Pressure range: minimum 150 psig
   Output: 4–20 mA
   Accuracy: minimum ±0.25% full scale
   Material: All-welded, titanium wetted parts (or similar)
   Cable: Vented polyurethane cable with reinforced support cable
   Products: Pressure transducer manufactured by KPSI, Model 700-140 or equal

3.2.1.4 Extraction Well Pumps

Pump selection was based on the following criteria:

- Submersible electrical pump curve meets total discharge head required

- Typical nominal flow rate of 10 gpm for on-station wells near IRP Site 24
- Typical nominal flow rate of 20 gpm for wells at the station boundary
- Capacity to pump from a depth of up to 200 feet and overcome head and friction losses of conveyance piping and equalization tank
- Available 480/460 volt power supply
- Minimize cavitation and agitation
- Low maintenance and resistance to corrosion, encrustation, and fouling

The selected pumps are manufactured by Grundfos, Model S Series. Motors will be 480/460-volt, 3-phase 1½ to 2-horsepower submersible, as manufactured by Grundfos. Motor starters will be located inside a NEMA 6P panel in the well vaults.

3.2.1.5 Conveyance Piping

Conveyance piping will be used to transport extracted groundwater from the wells to the SGU compound (see Drawing C-1). At the compound, the conveyance pipe will be connected to the SGU discharge pipe for final conveyance to the modified IDP treatment system. Conveyance pipelines will be below grade and above grade.

Some segments of below grade conveyance pipe will be double contained along specific well head laterals to the main header line. The double contained lateral lines are shown on Drawing C-1. A segment of the main header will be double contained from EX2403 to the junction of Line B with lateral Line M (see Drawing C-1 in Appendix C). For double contained pipe, a leak detection view port will be installed at low points. The view ports will have a 1-inch riser pipe that will be used for local testing for presence of moisture (see Drawing M-4 for a detail of the leak detection port).

The following criteria were used in the selection of pipe material, layout, and size:

- Service life
- Maintenance requirements
- Minimize overall pipe length
- Minimize head and friction losses
- Minimize installation costs

- Maintain an extracted groundwater velocity greater than 3 feet per second to avoid sedimentation and scale build-up in the pipe network
- Minimize the occurrence of water hammer by maintaining the extracted groundwater velocity to less than 8 feet per second and by installing air release valves
- Material compatibility with the contaminants of concern
- Compatibility with other materials used for valves, discharge pipe, and fittings.
- Valves selected for application (e.g., shutoff, modulating, blocking)
- Field installation procedures, including welding of joints
- Incorporation of maintenance points (e.g., flushing ports, air release valves, isolation valves, cleanout ports, and leak detection ports) that are easily accessible from the surface without requiring excavation and exposure of piping

Underground conveyance piping will be high-density polyethylene (HDPE). Aboveground piping at the compound will be Schedule 80 PVC and painted to protect it from ultraviolet (UV) radiation, or will be UV-rated. The pipe material selections were based on the results of the *Material Selection Report* (Earth Tech, 2003a) researched and prepared by Earth Tech; the report is included in Appendix D. The report ranks the available pipe materials according to the design criteria and operating conditions. The major conclusion of the report was that although thermoplastic materials such as PVC and polyethylene are not compatible with concentrated solutions of TCE, the concentrations of TCE in the groundwater are low enough that there will be no damaging effect to the pipe during the life of the remedial action.

HDPE was selected for the conveyance pipe because of its low cost, light weight, ease of handling, flexibility, and ease of joining by heat-fusion welding. The flexible nature of the material will make it possible to join lengths of pipe at the surface and lower into the trench afterwards or to bend to avoid existing utilities.

HDPE has a high expansion coefficient when exposed to heat from sunlight, making it unsuitable for aboveground applications. PVC pipe is more rigid than HDPE and does not expand and contract as much when exposed to temperature variations. However, it is susceptible to ultraviolet light and must be painted to protect against it. PVC pipe can be solvent welded (glued) and fitted with flanges to connect to other equipment.

Down-well pipe sizes were determined based on the outlet size of the pumps, velocity constraints, and head loss constraints. Well head PVC pipe will be 1-inch. Underground HDPE conveyance pipe size was selected to maintain fluid velocity and to minimize head loss due friction. Underground HDPE conveyance pipe ranges in nominal outside diameter from 1-½ through 6 inches.

3.2.1.6 Double-Contained Equalization Tanks

Two double-contained equalization tanks will be used as a buffer to mitigate delivery flow and pressure fluctuations from the SGU well field during startup and maintenance. Interior capacity of the combined tanks is 10,800 gallons, which is equivalent to about 19 minutes residence time at the peak flow rate of 550 gpm. Secondary containment will have the capacity to hold the entire volume of the interior tank. The water level in the equalization tanks will be monitored with ultrasonic level sensors and level switches to protect the transfer pumps from running dry and to protect against tank overflow.

The equalization tanks will be constructed of crosslinked polyethylene and equipped with a seismic and wind restraint system designed for seismic Zone 4 and 100-mile per hour wind. The tank will be protected against UV radiation, and will be equipped with a vent pipe at the top connected to a carbon filter to remove VOCs from the vented air stream. The tank will have access hatches to permit cleaning and inspection of the interior. Nozzles and fittings will be included for instrument and pipe connections.

3.2.1.7 Transfer Pump

The transfer pump will convey the accumulated groundwater from the equalization tank to the POC at the design conditions of 550 gpm at 55 psig. The following considerations were taken into account in selecting an appropriate pump for the system:

- Pump design conditions of 550 gpm at 55 psig
- Required connection pressure at the POC of 50 psig (required operating pressure at the modified IDP of 40 psig)
- One pump in operation and one on stand-by
- Electrical power supply of 480-volt, 3-phase

- Type of instrumentation and controls
- Maintenance requirements including resistance to corrosion, encrustation, and fouling

The selected pumps will be centrifugal pumps powered by variable frequency drive (VFD) motors able to operate from 200 to 600 gpm and capable of providing a discharge pressure of 55 psig at 550 gpm at the pump outlet. Pumps will be manufactured by Goulds Pump, or a similar manufacturer.

3.2.2 Electrical and Controls Design Considerations

The SGU extraction network and pump station (i.e., compound) will have two electrical service panels: one near the compound (Service No. 1) and a second near well 24_SGU-12 (Service No. 2). Service No. 1 will be 480-volt, 3-phase, 200 Amps. Service No. 2 will be 480-volt, 3-phase, 100 Amps. Primary power will be supplied from Southern California Edison's (SCE) existing energized Pole No. 1502590E, located at the corner of South 8th and G Streets.

The SGU extraction network monitoring and telecommunication selections were based on the need for continuous and automated operation with once-weekly personnel maintenance visits. The control philosophy minimizes unscheduled shutdowns, maximizes operational safety, and coordinates operations with the modified IDP.

3.2.2.1 Codes, Standards, and References

Equipment, materials, and installation will conform to applicable codes and standards, including the following:

- National Electric Code, latest edition
- National Electric Safety Code, latest edition
- National Electric Manufacturers Association
- National Fire Protection Association
- Instrument Society of America

3.2.2.2 Instrumentation, Controls, and Control Building

The communication system includes instruments, control systems, communication cable and conduit, and a control building. Control of the extraction and conveyance system will be designed to allow automated and continuous operation with minimal operator supervision. The system will be equipped with sensors, transmitters, and control devices to detect alarm conditions, to notify personnel via an auto dialer system, and if applicable to shut down the SGU system. Instrumentation and data acquisition devices, in conjunction with sampling and analysis of various process streams, will provide information for personnel to evaluate the performance of the system, design objectives, and system optimization.

The SGU system will have a programmable logic controller (PLC) and SCADA system for system control and data tracking. The PLC will receive inputs from instruments and control devices located throughout the systems (including the modified IDP); it will respond to inputs based on control set points by activating or deactivating equipment in accordance with a predefined control program.

The Process and Instrumentation drawings (Drawings P-1, P-2, and P-3), located in Appendix C, present an overview of the instruments, sensors, switches, alarms, set points, interlocks, and controls for the SGU system with interlock from the modified IDP. The well field and compound equipment will be under direct control by a PLC located in the control room at the compound.

The control building will be adjacent to the compound and will house the VFD, communications devices, and the PLC. The control building will be 8 x 12-feet, will have insulation, air conditioning, 480-volt 3-phase power (for VFDs), and 110-volt 1-phase power (for the PLC and lightings).

This PLC will be in communication with the modified IDP control system and will share pertinent SGU data with the modified IDP SCADA system. The control philosophy has the following characteristics:

- Maintain automatic operation of the SGU process in the event of an individual well or multiple well shutdown

- Provide automatic notification in the event of alarm conditions
- Ease trouble-shooting by individual control of well pumps
- Remote display and control of individual wells including pump motor, water level, flow rate and flow total
- Remote display and control of the compound pumps, discharge pressure, discharge flow rate/total, VFDs, and tank water levels
- The general control philosophy has the following objectives:
- Control the SGU system via PLC and SCADA
- Provide a control and data acquisition system to operate with minimal personnel supervision
- Detect and prevent the occurrence of alarm conditions
- Provide automatic dial-out to personnel in the event of an alarm condition,
- Provide for the safety of personnel and the environment
- Provide for protection of the equipment
- Integrate SGU PLC and SCADA system with the modified IDP treatment plant

3.2.2.3 Programmable Logic Control and Supervisory Control and Data Acquisition

Graphic screens will display process information and allow control action through an operator interface, referred to as the human-machine interface (HMI) via a personal computer situated in the control room. The HMI will consist of a screen with a selection of graphic symbols and displays that represent the SGU system. Process information will be readily available on the HMI and will include the following elements:

Initial Graphic Display at the HMI

- Overview of entire well field and compound
- Summary information such as totalized discharge flow rate and pressure

Individual Well Graphic Display (3–6 wells per screen)

- Well pump/motor status – online/offline
- Pump motor selection control for on/off/auto
- Pump flow rate (gpm) – numerical
- Cumulative totalized flow by day, week, month, year (gallons) – graphical
- Pump motor runtime in hours

- Selection buttons to switch to the following graphic display screens: (1) return to well field display, (2) return to initial display, and (3) switch to compound display

Compound Graphic Display

- Overview of entire compound with display of tanks, pumps, pressure gauge, flow meter, and VFD
- Operating status of modified IDP – online/offline
- Selection buttons to switch to the following graphic display screens: (1) view equalization tanks display, (2) view transfer pump display, (3) view discharge pressure gauge display, (4) view flow meter display, (5) return to well field display, and (4) return to initial display

Equalization Tanks Graphic Display

- Water Level in Tank – real-time visual (in feet) and historical graphical
- Buttons to (1) return to compound display, (2) return to initial display, or (3) switch to transfer pump display

Transfer Pump Graphic Display

- Pump motor status – online/offline and impeller speed (in RPM)
- Pump motor selection button to turn motor on/off/auto
- Discharge flow meter flow rate/total (gpm and gallons) – numerical below online pump and graphical for historical data
- Totalized and cumulative flow pumped by day, week, month, year (gallons) – graphical
- Discharge pressure (psig) – numerical below online pump and graphical for historical data
- Graphical selection buttons to (1) return to compound display, (2) return to initial display, and (3) switch to equalization tank display

3.2.2.4 Electrical Primary Power

A new primary power source has been designed by SCE and will be installed for the SGU remedy. The primary power will originate from SCE's existing overhead source at Pole No. 1502590E. The power line will be installed underground from SCE's pole to the SGU-24 trenches (in the vicinity of well SGU_24-28); cable for power will then follow the SGU-24 trench lines, underground, to the transformers. Transformer locations are shown on the electrical drawings in Appendix C. Transformers will step down SCE's power to 480 volts.

The 480-volt power will be distributed across the system as shown on the electrical drawings.

3.2.3 Civil Design Considerations

3.2.3.1 Codes, Standards, and References

- Uniform Building Code 1997
- American Society for Testing and Materials
- American Concrete Institute Building Code Requirements for Reinforced Concrete
- American Welding Society Structural Welding Code
- Occupational Safety and Health Act, 29 CFR Part 1926

3.2.3.2 Vault Design

The well vault will be constructed to allow flexibility during system operation, including access to globe vales and sample ports, access to the instrument, and maintenance of down-hole pumps. Well vaults will be constructed as follows:

- Pre-cast structural concrete well vault with inside dimensions 4 feet by 4 feet by 3 feet deep, following Specification Section 02525 (paragraph 2.8.1) of the design specifications included in Appendix F.
- Vaults and covers will be designed to meet H-20 traffic loading specifications, will have a gasket, and will be sized for accessibility for wellhead equipment and components.
- Vaults will be visibly labeled with a permanent, durable, rustproof, and weatherproof identification plate.

3.2.3.3 Compound Concrete Pad

A concrete pad has been sized for the two (double contained) equalization tanks. The foundation for the equalization tank and process piping supports have been designed to Seismic Zone 4 structural standards as shown in Drawing S-1 in Appendix C. Transfer pumps will be anchored on concrete housekeeping pads. The equalization tanks, transfer pumps, and piping will be located as shown in Drawing M-3 in Appendix C.

3.2.3.4 Excavation, Slope Stability, and Site Grading

The following items will be put into action during field work:

- During trenching and earth work, a competent person, as defined in Title 8 of the CCR, Subchapter 4, Construction Safety Orders Article 6, will evaluate the slope stability of the soil and will implement appropriate precautions to protect workers.
- Depth of piping will be installed as shown on the civil design drawings.
- Surface water drainage will be controlled to prevent accumulation of standing water in construction areas at all times (refer to the Erosion, Sediment, and Stormwater Control section in the RAWP for additional details).
- Soil from the onsite excavation will be considered for backfill. If determined to be unsuitable based on staining, odor, or evidence of VOCs via photoionization detector (PID) screening, then unusable soil will be segregated and stored according to procedures in the *Final Remedial Action Work Plan* (RAWP) and the *Final Sampling and Analysis Plan* (SAP) (WESTON, 2005), an appendix to the RAWP.

3.2.3.5 Utilities

Existing utilities were identified as part of the pre-design investigation from existing drawings, maps, utility locator markings, a geophysical survey, and potholing performed along the pipeline alignment during the pre-design investigation (Earth Tech, 2004b). Plans and profiles of the proposed conveyance pipe showing locations of existing utilities are provided in Drawings C-1 to C-10 in Appendix C.

3.2.3.6 Security Fencing

Chain-link fencing with locks will be used to control access and to protect and secure aboveground ancillary systems. The proposed maximum height of the chain-link fence is 6 feet.

3.2.3.7 Surface Water Drainage – National Pollution Discharge Elimination System Requirements

An erosion, sediment, and stormwater control plan is included in the *Final RAWP* (WESTON, 2005). This plan provides guidelines for implementing stormwater controls to reduce the amount and duration of soil exposed to erosion by wind, rain, runoff, and vehicle traffic, and it incorporates California stormwater best management practices.

3.2.3.8 Dust and Erosion Control

The contractor will monitor construction activities and provide dust controls, such as watering during work hours, after-work hours, holidays, and weekends

Erosion control measures will be required to minimize the potential for soil loss, both immediately following construction and in the long term Immediate control may include the use of mulch and erosion control mats. Long-term control may be provided by the DON by planting vegetation.

3.2.4 Modified IDP System

The extracted groundwater from IRP Site 24 will be conveyed by pipeline to the modified IDP treatment plant located off site. Per the settlement agreement, the OCWD and IRWD are required to provide VOC treatment services for the groundwater extracted and conveyed to the modified IDP. Water treatment processes currently selected for the modified IDP is air stripping and granular activated carbon treatment for removal of VOCs (CERCLA component). A "shutdown" interlock and "run status OK" will be provided via two twisted shielded pair conductors that are hard-wired between the modified IDP plant and the SGU control room. The modified IDP will be able to activate an SGU system shutdown for certain conditions, as agreed upon by the DON and IRWD. An ethernet cable between the SGU control room and the modified IDP plant will transmit data to the modified IDP plant control station.

3.3 INSTITUTIONAL CONTROLS

Institutional controls in the form of land-use restrictions will be used to limit the exposure of future landowner(s) and/or user(s) of the property to hazardous substances and to maintain the integrity of the remedial action until remediation is complete and federal and state cleanup levels have been met. Monitoring and inspections will be conducted to ensure that the land-use restrictions are being followed. Land-use control objectives to be achieved through the land-use restrictions include the following:

- Prevent the use of VOC-contaminated groundwater until cleanup objectives have been achieved
- Protect the groundwater extraction and monitoring wells, and associated piping and equipment

Institutional controls will also be used to ensure access to the site by the DON and regulatory agencies to ensure implementation of construction, operation, and maintenance; monitoring of the final remedy; and any further investigation and response action. Land-use restrictions will be applied to the property and included in findings of suitability to transfer (FOSTs), findings of suitability for early transfer (FOSETs), findings of suitability for lease (FOSLs), covenant agreement(s) between the DON and DTSC, and any quitclaim deeds or leases conveying or leasing real property containing the IRP Site 24 shallow groundwater plume.

3.3.1 Land-Use Restrictions on Property Overlying the Plume

The following are land-use restrictions on property overlying the IRP Site 24 SGU plume:

1. No new wells of any type shall be installed within the IRP Site 24 shallow groundwater plume or buffer zone without prior review and written approval from the DON, DTSC, EPA, and RWQCB. The transferee/lessee shall also obtain permits for such wells as required by Orange County Health Care Agency (OCHCA) and IRWD, as described in Section 8.1.2.3 of the ROD (DON, 2002).
2. Extraction and monitoring wells, and associated piping and equipment that are included in the remedial action, shall not be altered, disturbed, or removed without the prior review and written approval from the DON, DTSC, EPA, and RWQCB.
3. The DON, EPA, DTSC, RWQCB, and their authorized agents, employees, contractors, and subcontractors shall have the right to enter upon the premises to conduct investigations, tests, or surveys; inspect field activities; or construct, operate, and maintain the remedial action or undertake any other remedial response or remedial action as required or necessary under the cleanup program, including but not limited to monitoring well, pumping wells, and treatment facilities.

3.3.2 Additional Specific Requirements

The DON will also include the following specific requirements in the FOST, FOSET, and/or FOSL covenant agreement(s), and quitclaim deed(s) or lease(s):

- The transferee/lessee and future transferees/lessees must comply with all terms and conditions relating to land-use restrictions set forth in the ROD (DON, 2002).
- The transferee/lessee and future transferees/lessees must notify subsequent future transferees/lessees of all land-use restrictions and access provisions set forth in the ROD.
- The transferee must notify the DON, DTSC, EPA, and RWQCB of any transfer of all or a portion of that property by the transferee not later than 30 days after the conveyance.

3.4 IMPLEMENTATION OF INSTITUTIONAL CONTROLS

The on-station land-use restrictions set forth in the ROD (DON, 2002) will be incorporated into and implemented through two separate legal instruments:

- One or more covenant agreements with DTSC addressing on-station real property containing the Site 24 Shallow Groundwater Plume and associated buffer zone
- One or more quitclaim deeds/leases between transferee(s)/lessee(s) and the DON conveying/leasing on-station real property containing the Site 24 Shallow Groundwater Plume and associated buffer zone

The covenant agreement(s) will incorporate the land-use restrictions into restrictive covenants that will be conveyed with the land and that are enforceable by DTSC against future transferees. The deed(s) will include the identical land-use restrictions in environmental restrictive covenants that run with the land and that will be enforceable by the DON against future transferees. In essence, the DON and DTSC will each have the legal authority to enforce the land-use restrictions and will share responsibility for their enforcement.

3.4.1 Environmental Restriction Covenant and Agreement (Chapter 6.5 and 6.8 of Division 20 of the California Health and Safety Code and California Civil Code Section 1471)

The DON and DTSC shall enter into good-faith negotiations to enter into an Environmental Restriction Covenant and Agreement(s) pursuant to the substantive requirements of California Health and Safety Code division 20, chapters 6.5 and 6.8, and CCC § 1471 regarding environmental land-use restrictions, restrictive covenants, and access provisions. The Environmental Restriction Covenant and Agreement(s) will be consistent with and

serve as a mechanism to implement the restrictions set forth in Section 8.2.2.2 of the ROD (DON, 2002), in accordance with DON policy. Once the Environmental Restriction Covenant and Agreement(s) is finalized, it will be executed and recorded immediately prior to the recordation of a quitclaim deed for conveyance of the property pursuant to the Defense Base Closure and Realignment Act of 1990, 10 USC § 2687.

The Environmental Restriction Covenant and Agreement(s) will be executed by the DON on behalf of the United States and assigns (the covenantor) and DTSC and its successors and assigns, who shall be identified in the Environmental Restriction Covenant and Agreement(s) as the covenantee, pursuant to CCC § 1471. The Environmental Restriction Covenant and Agreement(s) will provide for access as set forth in Section 8.2.2.2 of the ROD (DON, 2002). The Environmental Restriction Covenant and Agreement(s) will include the legal description of the property overlying the on-station Site 24 Shallow Groundwater Plume and associated buffer zone, and the location of extraction and monitoring wells that are included in the remedial action. The Environmental Restriction Covenant and Agreement(s) will be binding upon all future owners and/or occupants until legally terminated; that is, it will be conveyed with the land. The Environmental Restriction Covenant and Agreement(s) will include information summarizing the remedial actions at Site 24 and provisions for terminating or modifying the Environmental Restriction Covenant and Agreement(s) when cleanup levels established in the ROD (DON, 2002) have been achieved and the remedial equipment has been removed. The Environmental Restriction Covenant and Agreement(s) will be recorded by the DON in the office of the county recorder for the County of Orange. The DON will provide a copy to DTSC following recording.

3.4.2 Environmental Restrictive Covenants in the Quitclaim Deed (California Civil Code Section 1471)

Pursuant to CCC § 1471, the DON shall include in the quitclaim deed(s) between the United States and the transferee(s) the same land-use restrictions and equivalent access provisions that are set forth in Section 8.2.2.2 of the ROD (DON, 2002) and the Environmental Restrictive Covenant and Agreement(s). All such provisions shall use the language contained therein.

The deed(s) will include the legal description of the property overlying the Site 24 shallow groundwater plume and associated buffer zone, and the location of extraction and monitoring wells required for the remedial action. The land-use restrictions and access provisions in the deed(s) will be binding upon all future owners and/or occupants until legally terminated; that is, they will be conveyed with the land. The deed(s) will include information summarizing the remedial actions at Site 24 and provisions for terminating or modifying the restrictive covenants in the deed(s) when cleanup levels established in the ROD (DON, 2002) have been achieved and the remedial equipment has been removed.

The DON will provide DTSC, EPA, and RWQCB with a copy of the relevant language for the proposed deed for review and comment by DTSC, EPA, and RWQCB in connection with DTSC's and EPA's review of the FOST or FOSET documents, as appropriate. The scope of DTSC's and EPA's review of the deed would be to evaluate whether the use restrictions set forth in the Environmental Covenant and Agreement(s) and Section 8.2.2.2 of the ROD (DON, 2002) have been incorporated into the deed language in accordance with the DON's commitments in the ROD. The deed will be recorded in the office of the county recorder for the County of Orange. A copy of the record deed will be provided to DTSC, EPA, and RWQCB following recording.

3.4.3 Monitoring and Reporting

Subject to their respective powers and jurisdictions, OCHCA and IRWD shall have the lead in ensuring that appropriate permits are obtained for construction of newer water wells in the VOC groundwater plume and taking any necessary enforcement action to ensure that such permits are obtained and complied with. The DON shall annually provide EPA, DTSC, and RWQCB with copies of permit applications and permits that it has received from OCHCA and IRWD during the previous year, beginning one year from date of issuance of the ROD and ending when remediation of the plume has been completed. The DON will provide these copies to EPA, DTSC, and RWQCB within 60 days of receipt from OCHCA and IRWD.

The DON shall monitor and inspect the status of compliance with the land-use restrictions in the Environmental Restriction Covenant and Agreement(s) and quitclaim deed(s) protecting on-station extraction and drinking water wells, monitoring wells, and associated piping and

equipment concurrent with inspections of such engineering controls and equipment, as provided in the operations and maintenance (O&M) plan. The DON shall report the results of the inspections to the EPA, DTSC, and RWQCB. The O&M plan shall address the frequency of such reporting and the contents of the reports of the inspections.

If a violation of such an on-station land-use restriction is identified and/or documented by either the DON or DTSC, the entity identifying the violation will notify the others within 10 working days of identifying the violation. The DON, EPA, DTSC, and RWQCB shall then consult to determine what, if any, action(s) should be taken, which of them shall undertake the action(s), and when action shall be undertaken. The results of such a consultation shall be formally documented in writing. DTSC may enforce the Environmental Restriction Covenant and Agreement provisions.

3.5 SEISMIC AND WIND CALCULATIONS

Seismic, wind, and anchorage calculations for the tanks, equipment, and foundations are included in Appendix E.

3.6 DESIGN SPECIFICATIONS

A list of the design specifications for the project is provided below, and has been included as Appendix F of this document. Division 01 specifications are consistent with the basic contract between the DON and WESTON. If the specifications differ from the contract, the contract will take precedence.

DIVISION 01 - GENERAL REQUIREMENTS

01110	Summary of Work
01310	Administrative Requirements
01330	Submittal Procedures
01355	Environmental Protection
01450	Construction Quality Control
01525	Safety and Occupational Health Requirements
01770	Closeout Procedures
01781	Operation and Maintenance Manual

DIVISION 02 - SITE WORK

02120	Transportation and Disposal of Remediation Derived Wastes
02222	Excavation, Trenching, and Backfill
02525	Well Construction
02821	Chain Link Fence and Gates

DIVISION 03 - CONCRETE

03300	Cast In Place Concrete

DIVISION 11 - EQUIPMENT

11211	Centrifugal Transfer Pumps
11212	Grundfos Submersible Extraction Well Pumps and Motors
11246	High-Density Crosslinked Polyethylene Tanks

DIVISION 15 - MECHANICAL

15050	Hydrostatic Testing of Pipe and Manifold
15051	Valves, Fittings, Flanges, and Instruments for Vaults
15064	PVC Pipe, Fittings, Flanges for Compound
15065	HDPE Pipe, Fittings, and Flanges
15101	Granulated Activated Carbon Vessel

DIVISION 16 - ELECTRICAL

16010	General Electrical Requirements
16050	Basic Electrical Materials and Methods
16400	Service and Distribution

DIVISION 17 - CONTROLS

1734	Allen Bradley Control Logix Remote PLC
1756	Allen Bradley Control Logix Host PLC

4. IMPLEMENTATION

Project roles and responsibilities, field procedures to install extraction wells, conveyance piping, and utilities include pre-mobilization and site preparation, extraction well preparation, piping network installation, and utility (i e., electrical) connections

4.1 PROJECT ROLES AND RESPONSIBILITIES

Personnel for the project include representatives from NFECSW SDIEGO, the BCT, the Remedial Design and Oversight Contractor, and the Remedial Design/Remedial Action Contractor. The roles and responsibilities are outlined in the following paragraphs.

4.1.1 Southwest Division Naval Facilities Engineering Command, San Diego

The positions and responsibilities of the Southwest Division, Naval Facilities Engineering Command, San Diego (NFECSW SDIEGO) project management are as follows:

- **Contracting Officer (CO)**—Responsible for the negotiation and execution of the construction contract. The CO is responsible for providing technical direction to WESTON.

- **Remedial Project Manager (RPM)**—Provides governmental oversight of technical issues for the project. Interfaces with the BCT, community representatives, and the contractor to meet project objectives.

- **Resident Officer in Charge of Construction (ROICC)**—Coordinates all work that takes place at MCAS El Toro. Specific tasks include approving vendor submittals, verifying personnel qualifications, conducting constructability reviews, and overseeing construction

- **Quality Assurance Officer**—Responsible for government oversight of the Quality Assurance (QA) program and provides quality-related direction for the project. Has authority to suspend project activities if the contract quality requirements are not met.

4.1.2 Base Closure Team

The positions and responsibilities of key BCT personnel are as follows:

- **BRAC Environmental Coordinator (BEC)**—The BEC is the NFECSW SDIEGO representative who chairs the BCT and is responsible for coordinating environmental restoration and compliance programs and updating the BRAC Cleanup Plan at MCAS El Toro.

- **U.S. EPA RPM, DTSC RPM, and RWQCB RPM**—These agency RPMs are responsible for overseeing and monitoring the progress of remedial design and remedial action, and conformance of these activities with the requirements of the FFA and ROD.

4.1.3 Remedial Design/Oversight Contractor

The remedial design and oversight contractor is contracted by NFECSW SDIEGO for preparation of the 60 percent design package and for oversight of preparation of the 90 Percent Design Submittal, the 100 Percent Design Submittal, and during the construction phase. Earth Tech, Inc. is the remedial design/oversight contractor for the project. The position and responsibilities of key remedial design/oversight contractor are as follows:

- **Program Manager**—The program manager is responsible for all aspects of the CLEAN II program.

- **Program Quality Manager**—The program quality manager is responsible for developing the QA process and supervising audits within the CLEAN II program for compliance with program and project specific procedures and specifications.

- **Health and Safety Manager**—The health and safety manager is responsible for supporting NFECSW SDIEGO in the review and oversight of the program health and safety.

- **Project Manager**—The project manager has overall responsibility for work performed for the remedial design and in duties related to oversight support.

- **Project QA Engineer**—The project QA engineer has final responsibility for QA activities within the project. The project manager and QA engineer may be the same person, providing that the person is a registered Professional Engineer in the State of California. The QA engineer is responsible for activities stated for the QA staff, daily direction of the QA staff, and testing laboratories

4.1.4 Remedial Design/Remedial Action Coordinator

WESTON has been contracted by NFECSW SDIEGO to construct the extraction wells, conveyance piping, compound, and other ancillary systems in accordance with the Final 100

Percent Design Submittal. WESTON's responsibilities will include, but not be limited to, the following: conducting all fieldwork, implementing the project-related tasks and specifications, and preparing the 90 Percent and 100 Percent Design Submittals. WESTON'S staff will include the following positions:

- **Program Manager**—The program manager is responsible for all aspects of the EMAC remedial action program.

- **Program Quality Control (QC) Manager**—The Program QC manager is responsible for developing the QC process and supervising audits of projects within the remedial action program for compliance with program and project-specific procedures and specifications.

- **Health and Safety Manager** — The Health and Safety Manager is a Certified Industrial Hygienist and has the following responsibilities: ensure that the Site Health and Safety Plan (SHSP) complies with all federal, state, and local health and safety requirements; evaluate and authorize any changes to the SHSP; implements and oversees the Health and Safety Program; and assists in acting as liaison with government officials regarding health and safety related site matters.

- **Project Manager** — The Project Manager will be responsible for all work performed in support of the Remedial Action. Responsibilities include project planning, review of this CP, preparation of activity specific work instructions, scheduling, staffing, execution of tasks and subcontracts, and communication with the RPM/ROICC and the remedial design/oversight contractor.

- **Project Engineer** — The Project Engineer oversees the development of the 90 and 100 Percent Design Submittals.

- **Project QC Engineer**—The Project QC Engineer is responsible for ensuring that field staff, subcontractors, and vendors comply with project requirements and contractual obligations for all field activities as defined by the project plans, drawings, and specifications.

- **Site Manager** — The Site Manger reports to the Project Manager and is responsible for supervising the implementation of all field operations He provides direct supervision of field staff and subcontractors

- **Site Health and Safety Officer** — The site safety officer is responsible for establishing and maintaining communications with all site personnel concerning the SHSP, verifying adherence to site safety requirements, organizing and conducting safety meetings (tailgate meetings) and recording and documenting safety incidents on site.

4.2 PRE-MOBILIZATION ACTIVITIES AND SITE PREPARATION

Preliminary tasks include geophysical surveys, geotechnical investigations, and acquisition of work clearances.

4.2.1 Geophysical Surveys

At each location where drilling, backhoe trenching, or other intrusive investigations are to be conducted, utility clearance procedures will be followed to minimize potential damage to existing utilities. After each location is selected and located in the field, utility maps obtained from the former MCAS El Toro caretaker office will be used to determine the approximate location of nearby buried utilities.

Geophysical surveys, using a combination of ground-penetrating radar, magnetic surveys, and electromagnetic methods, will be used to mark the locations of subsurface utilities in the field. Maps depicting all known utilities will be completed prior to initiating any subsurface activity and included in the final design report. The maps will include plan and cross-sectional views of utility locations and elevations (where available) along the proposed extraction well locations and routes for conveyance pipe trenches. The maps will be generated using data from existing as-built drawings, field observation, and inspection.

Prior to any intrusive activity, work clearances will be obtained from the station caretaker office designated by the DON. In addition, prior to drilling, a hole will be hand-augured to a depth of 5 feet to help assess the presence of subsurface utilities that may not have been detected by the geophysical survey. In case of a utility emergency, the designated caretaker will be immediately notified.

4.2.2 Geotechnical Investigation

A geotechnical investigation was performed in 2004 by a professional geotechnical engineer licensed in the State of California. The Draft Geotechnical Memorandum (Earth Tech, 2004a) was used to design the subgrade, steel reinforcements, and concrete mix design for the concrete pad.

4.2.3 Permitting

Remedial actions taken under CERCLA §§ 104, 106, or 122 that are conducted entirely on site do not require federal, state, or local permits. However, the DON will prepare a permit equivalency package demonstrating compliance with all substantive requirements.

4.3 WELL INSTALLATION

This section presents procedures and instructions for installing groundwater extraction wells, including the following:

- Drilling and soil sampling
- Well installation
- Well contamination prevention
- Well construction sequencing
- Wellhead and manifold vault construction

4.3.1 Drilling and Soil Sampling

Drilling and soil sampling will be conducted in general accordance with Comprehensive Long-Term Environmental Action Navy (CLEAN) II Standard Operating Procedures (SOPs) 2, *Drilling Method Evaluation* and SOP 4, *Soil Sampling* (BNI, 1999), respectively, or their equivalents. Soil samples will be visually classified according to the Unified Soil Classification System. Soil logging will be completed under the supervision of a California Registered Geologist. Records of soil borings will be kept in the field logbook and on a boring log form.

4.3.2 Well Installation

Groundwater extraction wells will be installed in general accordance with appropriate industry guidelines. Field construction details will be documented on the well construction record. The well will be constructed in the following sequence:

- The casing string with centralizers will be lowered in the borehole.
- The filter pack will be emplaced below and around the casing string to above the screened area.
- The silica sand and bentonite seals will be emplaced.
- The cement grout will be tremied within 3–5 feet of the ground surface.

The estimated volume of filter pack sand, bentonite, and grout will be calculated. All materials will be on site before well construction. The materials will be new and will remain in their shipping containers until ready for use.

4.3.3 Well Development

Well development is the final step in well construction that serves to accomplish the following:

- Remove formation damage caused by the borehole drilling process.
- Develop the filter pack.
- Establish the optimal hydraulic contact possible between the well and the aquifer formation supplying fluids to (or accepting fluids from) the well (USACE 2000)

Following installation, measurements of total well depth and static water level will be taken with an accuracy of 0.01 feet with a tape measure equipped with an electronic water detector. Measurements and calculated total well volume will be recorded in each well development log. Following 24 hours of grout curing time, the same measurements will be taken and entered into each well development log. Field equipment (e.g., pH meter, conductivity meter, water level recorders) will be calibrated prior to use each workday and promptly serviced, if required, in accordance with manufacturers' instructions. Specific conductivity, temperature, and pH will be monitored during well development to demonstrate that these properties are stabilized. These data will also be entered into each well development log. Well development will use one or a combination of the following established methods, depending on site conditions:

- Overpumping
- Surging and bailing

- Surging and pumping
- Hydraulic jetting
- Air development
- All equipment used in the wells during development will be decontaminated between each well to prevent cross-contamination.

4.3.4 Well Contamination Prevention

To reduce the effects of biofouling during drilling and well construction, care will be taken to avoid introducing iron bacteria into the wells. This will be accomplished by using chlorinated drilling fluids and by disinfecting all drilling tools with chlorine solution between each use. Filter pack material will also be disinfected before emplacement, which can be accomplished by adding dry calcium hypochlorite to the packing material before it is placed in the well or using chlorinated water if the packing material is pumped into the well as slurry. Disinfection procedures are located in Design Specification 02525 of Appendix F.

4.3.5 Well Construction Sequencing

Thirty-five groundwater extraction wells will be constructed initially. Additionally, four existing monitoring wells will be converted to multiphase extraction wells for groundwater and soil vapor extraction during construction of the 35 wells. The location of the first 35 proposed extraction wells and the four multiphase wells are shown on Figure 4. It is anticipated that four wells, to be located along the station boundary, will be installed toward the end of the 50-year operational period, after approximately 30–40 years of operation.

4.3.6 Well Vault Construction

All wellheads will be installed below grade. Well vaults used to house the well and wellhead components (e.g., shutoff valves, pressure gauges, flow meters, power connections, and monitoring ports) will consist of pre-cast concrete with traffic-rated steel covers. Details of the well vaults are provided in Drawing M-1 in Appendix C.

4.4 PIPING NETWORK INSTALLATION

A piping network will be installed to convey groundwater from the extraction wells to the modified IDP. Conveyance piping between the extraction wells and the equalization tank will be installed below ground. Drawing C-11 in Appendix C presents a typical trench cross-section of the conveyance pipe, power, and communication conduits. The route of the underground pipe is based on extraction well locations shown in the groundwater modeling report. As part of the pre-design investigation, a geophysical survey was conducted on the conveyance pipe route to identify underground utilities and obstructions. In addition, potholing to confirm the locations of underground utilities and obstructions was also performed as part of the pre-design investigation. This fieldwork was used to generate plans and profiles for each run of the conveyance piping and these are presented in Drawings C-1 through C-10 in Appendix C. The piping design is flexible enough to allow for adjustments should previously unidentified utilities or obstructions be found during construction.

4.4.1 Trenching

4.4.1.1 Excavation

All applicable provisions of Title 8 of the CCR, Subchapter 4, Construction Safety Orders, Article 6 will be complied with during trenching and excavation. All trenches will be inspected by a Competent Person as defined in CCR Title 8. Trenches will be evaluated by this Competent Person for shoring or sloping measures required to ensure the protection of workers. The Competent Person will inspect all trenches into which workers may enter, regardless of depth, to ascertain if there is a potential for cave-in. Workers will not enter a trench that is greater than five feet deep unless that trench has been properly shored and the Competent Person has agreed that the trench has been properly shored. Trenches will be excavated while ensuring that the sides are stable at all times. Trench depth will be determined based on existing underground utilities, obstructions, and minimum burial requirements. Excavated material will be stockpiled a minimum of 2 feet from the trenches, sidewalks, or driveways. Trenches will be backfilled as soon as is practical. At the end of each day, and as required during work, open trench areas will be appropriately barricaded or covered.

4.4.1.2 Trench Width

The trench width will be determined based on the pipe diameter and the width required for effective pipe laying, joining, and backfill. The space between the pipe and the trench wall will allow for safe placement of pipe and adequate compaction of haunching. The trench width will be constant for the full trench depth unless otherwise noted in the design drawings. The trench width will depend on pipe diameters and the number of utilities to be installed. A typical trench cross section is shown in Drawing C-11, located in Appendix C.

4.4.1.3 Surface Water Control

Control of surface water runoff and runon will be maintained as described in the RAWP, Section 3.5.7, Erosion, Sediment, and Stormwater Control.

4.4.1.4 Trenchless Installation

Where appropriate, trenchless installation techniques, such as horizontal, directional drilling or guided boring, may be used to go under and around obstructions. While performing trenchless installations, excess spoils will be handled in accordance with the Waste Management Plan and the Erosion, Sediment, and Stormwater Control Plan as described in the RAWP

4.4.2 Pipe Installation

General guidance for pipe installation has been provided in Section 15200 of the design specifications included in Appendix F. This specification covers items such as delivery, storage, and handling; pipe materials; fittings descriptions; installation of above-ground and below-ground piping; piping support systems design; and field quality control. Quality control procedures will include visual inspection of joints and leak tests. Leak tests may be either hydrostatic or pneumatic.

4.4.3 Backfill and Resurfacing

All trenches will be backfilled and resurfaced to match existing conditions and as shown on the drawings. Backfill materials, trench bottom, bedding material, placing and compacting,

and final backfill will be done as shown on the Drawings (Appendix C) and as described in the Specifications (Appendix F).

4.4.4 Connection to Modified IDP System

Connection of the SGU system to the modified IDP system will include connection of the SGU discharge pipe and signal/controls wiring to a point of connection adjacent to the modified IDP plant.

The SGU system will be interlocked with the modified IDP treatment system controls to ensure that groundwater transfer is halted when the modified IDP system is offline.

4.5 ELECTRICAL CONNECTION

Each field instrument will be connected and terminated individually to its corresponding receiver instrument. To provide accurate measurement and control, instrument signal cables and conduits will be spaced away from power cables and conduits. Coaxial cable, AC, and DC wiring will be installed in separate conduits. Electronic instruments will be grounded to reduce the effect of electrical noise. All wiring and cable associated with instruments will be numbered at their respective panel and termination points.

4.6 OTHER SITE OPERATIONS

Other general site operations include security, traffic control, health and safety, decontamination, and management of residuals generated during the construction process.

4.6.1 Traffic Control and Site Security

Traffic Control and Site Security will be maintained as described in the RAWP. Traffic control, where necessary (e.g., trenching across Perimeter Road), will be performed in accordance with the Section 3 5 6, Traffic Control Plan, of the RAWP. Traffic controls will be used to provide for the efficient completion of work activities in a safe working environment while minimizing the impact on the normal traffic flow. Cones, signs, barricades, lights, or other traffic control devices and personnel required to control traffic will be provided if necessary. Prior to the start of work, a traffic control plan will be

submitted detailing the proposed controls on traffic movement. Site security will be performed in accordance with Section 3.5.1, Site Layout and Security, of the RAWP.

4.6.2 Health and Safety Compliance

The SSO or equivalent will be responsible for verifying that all work is performed in accordance with the SHSP. The SSO or equivalent will also document daily tailgate safety meetings, breathing zone air monitoring during drilling, and implementation of required personal protective equipment (PPE), as directed in the SHSP. The SHSP presents procedures to be employed during all onsite work activities. The practices and procedures presented in the SHSP are mandatory for all contractor and subcontractor employees while engaged in work operations at the site. The SHSP also requires that all visitors to areas under control of the contractor abide by these procedures.

4.6.3 Decontamination

Decontamination will be required for all personnel and equipment that are exposed to substances of concern. A decontamination area will be established for this purpose.

4.6.3.1 Decontamination Area

A decontamination area will be established prior to initiation of any drilling. The base of the decontamination area will consist of two layers of 10-mil heavy-duty plastic sheeting. The plastic sheeting will be bermed with sandbags in order to form a basin for rinsate containment. A wash rack will be placed on the plastic sheeting to allow decontamination of sharp materials without damage to the liner. The rinsate will be pumped from the decontamination area into United States Department of Transportation (DOT)-approved 55-gallon drums or a temporary storage tank.

The size of the decontamination area and liner will be sufficient to accommodate the largest piece of equipment that may come in contact with contaminants.

4.6.3.2 Equipment and Personnel Decontamination

Equipment will be decontaminated by steam cleaning or by a non-phosphate detergent scrub, followed by fresh water and distilled or deionized water rinses. Decontamination will take place on pallets or on plastic sheeting. Clean equipment will be stored on plastic sheeting in an uncontaminated area. Equipment stored for an extended period will also be covered by plastic sheeting. Except in emergency circumstances, transport of contaminated field equipment off site is forbidden. Similarly, storage of contaminated field equipment that has not been decontaminated either on site or off site is forbidden.

All liquid and solid wastes (e.g., purged groundwater, decontamination water, and soil cuttings) will be treated as potentially hazardous and handled in accordance with the protocols.

Drilling rigs and augers used for borehole and well construction will be decontaminated using a high-pressure sprayer and detergent. Augers will be decontaminated after completion of each well. Drill rigs will be decontaminated prior to exit from the exclusion zone or more frequently as required.

Heavy equipment that comes into contact with contaminated soil during trenching and construction activities will be decontaminated using a pressure washer and detergent at the decontamination area if contaminants are encountered. Decontamination will be performed prior to exit from the exclusion zone or more frequently as necessary.

All sampling equipment will be decontaminated before and between sampling points to avoid contaminant dispersion and cross contamination. Split-spoon samplers will be scrubbed in a detergent solution, rinsed in two stages, and air-dried.

The field team (including the drilling crew) will perform personnel decontamination prior to leaving the work site at the conclusion of each workday. Under no circumstances (except emergency evacuations) will personnel be allowed to leave a controlled work area where contaminants are exposed without performing decontamination.

A personal decontamination station (PDS) will be established at the exit location of each controlled work area. The PDS will allow a soap and water washing and water rinse of exterior protective gear to remove contaminants, followed by doffing of the gear. To accomplish this, the specific PDS set up/procedures will be established based on the level of protective equipment in use as specified in the SHSP.

4.6.4 Remediation-Derived Waste Management

Remediation derived waste will be handled and disposed as described in Section 3.9, Waste Management, of the RAWP, applicable regulations, and laws. Remediation-derived waste (RDW) consists of all materials that may be contaminated with contaminants of concern during the installation of wells and associated piping. It is anticipated that the field work will generate the following wastes:

- Soil cuttings
- Well development and purged groundwater
- Spoils from trenching
- Decontamination water
- Disposable PPE, sampling equipment, and miscellaneous debris encountered during well installation

RDW will be sampled, analyzed, characterized, labeled, managed, and disposed of in accordance with applicable regulations (e.g., 40 CFR 261 and Title 22 CCR 66261), WESTON'S protocols, and Specification Section 02120 ("Transportation and Disposal of Remediation Derived Wastes") in Appendix F. RDW will be managed so that the waste does not pose unacceptable risk to potential onsite or offsite receptors and in accordance with the applicable EPA regulations, such as 40 CFR 300.440, "Procedures for Planning and Implementing Off-Site Response Actions" (CERCLA Off-Site Rule). Different management strategies will be implemented depending upon whether the RDW is hazardous or nonhazardous. If the RDW generated during construction activities is determined to be hazardous waste, then 40 CFR and Title 22 CCR 66261 storage, transport, and disposal requirements will apply. Hazardous RDW will be transported to an approved waste

treatment, storage, and disposal facility within 90 days of accumulation, in accordance with CERCLA Off-Site Rule.

In general, proper implementation of RDW procedures requires Contract Task Order managers, field managers, and their designees to perform the following tasks:

- Minimize RDW as it is generated
- Segregate RDW by matrix and source location
- Follow proper procedures for RDW container handling and labeling
- Prepare an RDW container inventory
- Update and report changes to the RDW container inventory

4.6.4.1 Soil, Decontamination Water, Well-Development Water, and Purged Groundwater

Soil cuttings, decontamination water, well-development water, and purged groundwater may be generated at the site during construction. Soil cuttings from the boreholes will be placed in DOT-approved 55-gallon drums or 20 cubic yard roll-off bins pending characterization. The cuttings will either be spread on-site or disposed at an appropriate off-site facility. Roll-off bins of soil will be labeled and covered with a tarp while on-site.

Decontamination water will be generated during drilling activities. Drilling augers, non-disposable sampling equipment, the backhoe bucket, and PPE will be cleaned and decontaminated between each sample or activity location. Decontamination water will be collected in DOT-approved 55-gallon drums and transferred daily into aboveground storage tanks. Drums containing liquid RDW will be left with a headspace of 5 percent by volume to allow for any expansion of the liquid.

Well-development water and purged groundwater will be temporarily stored in a 5,000 gallon storage tank located adjacent to the well being developed/purged. Water from the temporary 5,000 gallon tank will be transferred, via tanker truck, to 20,000 gallon storage tanks located adjacent to Buildings 296. Stored water will be sampled and analyzed. After analysis has been completed, the water will be characterized for proper disposal methods.

Disposal may include on-site treatment (liquid-phase granulated activated carbon for removal of VOCs and polishing with resin for removal of perchlorates) with discharge to ground for percolation under the CRWQCB, Santa Ana Region, Waste Discharge Requirement (WDR) Order No. R8-2003-0033 adopted on May 30, 2002; and amendments to this order (WDR Order No. R8-2003-0085).

Drums and tanks will be labeled with the date and the boring number in accordance with applicable regulations. Upon completion of fieldwork, a final inventory of the drums and/or tanks will be conducted to ensure that they are labeled correctly. Wastewater characterization, along with appropriate approvals, will determine the mode of disposal.

4.6.4.2 Disposable PPE and Sampling Equipment

If based on the professional judgment of the field manager, the PPE and disposable sampling equipment can be rendered nonhazardous after decontamination procedures, then this equipment will be collected in double plastic bags and will be disposed off site as municipal waste. Equipment that is potentially contaminated will be stored in drums, labeled, inventoried, characterized, and disposed according to applicable regulations. All waste materials generated in the support zone are considered non-RDW trash and will be properly disposed as municipal waste.

5. SYSTEM OPERATION

Operation of the SGU extraction system includes maintaining the process control philosophy, startup and testing procedures, and routine O&M procedures (including data collection and sampling).

5.1 PROCESS CONTROL AND INSTRUMENTATION

Aside from routine shutdowns for maintenance of the extraction system and modified IDP treatment plant, the system will be designed to operate continuously. Once the system has been started, it will operate unattended except for routine O&M visits, system shutdown, and clearing alarm conditions/restarting the system.

5.1.1 System Description

The SGU extraction and conveyance system is designed to extract TCE-contaminated groundwater from the SGU wells, and to pump the water to the modified IDP for treatment. The system is designed to extract an average of 400 gpm of contaminated groundwater from the SGU. The process system design is presented in Section 3. The extraction and conveyance system consists of four main components:

- Extraction well field
- Conveyance piping
- Compound
- Monitoring well network

Drawings P-1, P-2, and P-3 (Appendix C) present piping and instrumentation information for control of the system. Each of the main components is described in more detail in the following sections.

5.1.1.1 Extraction Well Field

Groundwater will be extracted from wells using submersible electric pumps and motors. Based on the groundwater model, 35 of the wells will be installed initially to extract the groundwater with the highest concentration of TCE for source control. In addition, four

existing monitoring wells will be converted to extraction wells in order to enhance mass removal using SVE. It is anticipated that an additional 4 groundwater extraction wells will be installed after approximately 30–40 years along the southwest corner of the former station boundary. Each well will be supplied with 480-volt, 3-phase electric power. Single-phase, 110-volt power and/or direct current will be provided for instrumentation, power, and/or lighting where required. A down-well pressure transducer will be used to monitor the groundwater level in the well. Access to each well will be via a vault designed to accommodate the instruments, junction boxes, and conduits, discharge piping, valves, and sample port. The discharge pipe from the well will be equipped with a check valve to prevent backflow into the wells and a globe valve to modulate flow and to isolate the piping during maintenance.

5.1.1.2 Conveyance Piping

Groundwater will be pumped out of the extraction well; it will be conveyed to the compound (to be located near the southwest boundary of the former station) via a network of underground piping. All wells will have lateral pipelines that are joined to the main header pipe. The main header pipe will transect the well field and terminate at the compound. The piping system is designed to avoid low and high points that could result in the collection of solids at the low points and air at the high points. Flushing ports will be installed at the end of each lateral line and along the main header line to allow for periodic high-pressure flushing to clear out solids. Air release valves will be installed at high points to allow any air buildup in the system to be released.

5.1.1.3 Compound

The compound is within a fenced area near the northwest corner of the station boundary as shown in Drawings C-11 and C-12 in Appendix C. The compound includes the concrete pad, transfer pumps, tanks, instruments, and a control building.

The main components of the transfer equipment are the equalization tank and centrifugal transfer pumps, anchored to the concrete pad. The groundwater from the conveyance piping will flow through equalization tanks. The equalization tank will also serve as a settling

chamber for any suspended solids carried by the water. The water level in the tank will be monitored via a pressure transducer and ultrasonic level sensor that communicate with the PLC. The water level will be used to control the impeller speed of the transfer pump

The compound will have two centrifugal transfer pumps to convey water from the SGU system to the modified IDP system A single pump will be on duty at any one time. The pumps will be rotated on a regular schedule, based on motor runtime in hours. Pump redundancy is designed to ensure a constant supply of water to the modified IDP in case of scheduled or emergency shutdown of one of the pumps. Pump motors will be operated with a variable frequency drive. Per the requirements of the modified IDP system design, each pump will be designed to provide a discharge pressure of 50 psig at the POC at a flow rate of 550 gpm.

The control building will contain the PLC, HMI, personal computer, VFD controllers, SCADA system, office equipment, and storage cabinets. A layout of the control building is shown in Drawing E-1.3

5.1.1.4 Monitoring Well Network

A monitoring well network was selected based on the ability to monitor the plume as it changes/shrinks during the extraction remedy. Easements to these wells will be obtained to allow for access during the duration of the remedial action. This network is further discussed in Section 7, Remedial Action Monitoring.

5.1.2 Process Control

The extraction pumps, transfer pumps, variable frequency drives, and water level in the equalization tank will be controlled by instrument signals sent to and interpreted by the PLC.

The PLC will activate or deactivate the pumps based on the required combined well field flow, groundwater levels in the wells, water level in the equalization tank, and discharge flowrate. A SCADA system will accumulate data on groundwater levels, individual extraction well flow rates, cumulative extracted volumes for each well, and the cumulative online time. The PLC will shut down the system if control parameters are exceeded. Table 7

has a preliminary list of control parameters. An auto dialer will have a list of contact phone numbers to call in a predetermined sequence in the event that the auto dialer system is activated by alarms or other conditions.

The extraction pump motors will be controlled via the PLC in response to the water levels in the extraction wells, water levels in the equalization tank, transfer pump discharge flowrate, or shutdown signals from the IDP. The tank water level sensors in the equalization tank will be used to control the transfer pump impeller speed (via the VFD), and will be used stop and start the pump motors.

The tanks will have one fail-safe level switch (one high-high water level) and an ultrasonic level sensor. The ultrasonic level sensor will be 4-20 mA output with dual purpose: (1) it will vary the speed of the pump impeller based on water levels in the tank and (2) it will be used to shut down or turn on the system pumps based on pre-determined set points. The set points will do the following:

- High level will turn on the centrifugal transfer pumps
- Low level will turn off the centrifugal transfer pumps.
- Low-low level will shut off power to the centrifugal transfer pumps and will activate an alarm and the auto dialer contact sequence.
- High-high level will activate the well field pump shutdown

If the water level reaches the high-high level fail-safe switch, the switch will activate a shut down sequence of the extraction well field, the alarm system, and the auto dialer contact sequence.

Discharge pressure, temperature, and flow rate will be measured downstream of the centrifugal transfer pump. Flow rate information will be used as inputs for transfer pump control and will be communicated to the modified IDP as needed. A low flowrate will activate the system shutdown interlock, the alarm system, and the auto dialer contact sequence. The low flow rate alarm is used to protect the pump.

An interlock between the modified IDP and the SGU compound will provide an emergency shutdown of the SGU system by the modified IDP.

PLC alarms will activate the telephone auto dialer for call-out of the personnel on the contact list.

5.2 STARTUP

5.2.1 Initial Startup and Testing

This section describes startup and testing of the extraction and conveyance system. System startup and sequencing will be coordinated with the IRWD. Testing and verification of interlock between the SGU and the IRWD will be performed. The objectives of the startup phase include the following (USACE 1999):

- Verify that mechanical systems, controls, and interlocks are operating in accordance with design criteria
- Verify design assumptions
- Evaluate sustainable extraction rates
- Identify design flaws (if any)
- Identify unforeseen operational or hydrogeologic issues that may require adjustments to design or operating procedures
- Finalize detailed O&M protocols for maintenance, mechanical operation, monitoring, and adjustment of controls to optimize performance

Information collected at startup will also serve as a baseline for future performance. As the performance of the system varies over time, the change with respect to the baseline will allow the system operators to monitor performance, troubleshoot any system problems, and adjust operating parameters to optimize system effectiveness. Specific elements of startup procedures include the following:

- Check well vault, transfer pump, piping, and equalization tank for leaks
- Monitor drawdown for each well
- Measure extraction flow rates

- Initiate the sampling program
- Test each well for flow capacity to verify design assumptions
- Test start/stop from all control mechanisms
- Test if current draw/voltage matches specifications for all phases
- Test high/low shutoff and alarms
- Monitor chemical characteristics at station boundary and compare to ECLs

5.2.1.1 Submersible Pumps

Pump operation will be checked by comparing the extraction flow rate and operating pressure to the pump performance curve. This comparison will be documented on copies of the manufacturer pump performance curves and incorporated into the site O&M Manual. The flow rate will also be compared to the design basis for expected sustainable flow rate.

The transfer pumps will also be monitored for excessive noise or vibration, which could be indicative of a manufacturing or operating problem.

5.2.1.2 Wells

Water levels will be monitored prior to and after system startup to ensure that extraction rates are optimized at each well. However, this optimization process is expected to take several weeks. Once steady state is observed in each well, baseline monitoring will be performed. The monitoring will include measurements of flow rate and water level, and collection of groundwater samples for laboratory analysis to determine baseline contaminant levels in each well.

5.2.1.3 Conveyance Piping

Once installed, the conveyance piping and wellhead connections will be inspected and tested for leaks, and the results recorded on test logs. Double-contained piping will be used for the lateral lines where shown on Drawing C-1; double-contained pipe (where indicated on the Drawings) will extend from the well vault to the main header. A leak detection view port will be installed at the low point of these double-contained lateral lines. The main header will be double-contained from the eastern end of the line (near 24EX03) to the junction of line B with lateral line M (see Drawing C-1).

5.2.2 Startup Procedure

Startup of the system will be performed in accordance with the O&M Manual. However, if actual startup and shutdown procedures differ from those specified in the O&M Manual due to unforeseen circumstances during initial system operation, the O&M Manual procedures will be refined and the actual startup/shutdown procedures documented and incorporated into the manual. The following is a general start-up sequence to be used.

Start up of the extraction wells will be performed with groups of 5 to 10 wells coming on line one-at-a-time, starting with the boundary extraction wells followed by the on-station wells. As each pump is started up, it will be observed for proper operation. Once all pumps have been started up, a shakedown (shutdown and start-up) will be performed as necessary and operating conditions recorded. Start-up operations at the compound shall be as follows:

1. Groundwater from the extraction well field will be routed into the equalization tanks. Groundwater will be discharged from the tanks via the centrifugal transfer pump.
2. The transfer pump will be operated at 100 gpm, then 200 gpm, then 300 gpm, and then 400 gpm, for specified time intervals that match the rate at which the extraction wells and their associated flows are brought on line. This shall be done to minimize the amount of on-off cycling of the transfer pump during start-up.
3. When the well field and transfer pump outputs are brought up to the desired operational flow rate of 400 gpm, and after the desired set point has been met, groundwater drawdown levels in each well will be monitored and individual well extraction flow rates adjusted to maintain a constant drawdown. This period of adjustment can be expected to take several weeks.
4. When the combined well field pumps and the centrifugal transfer pump are operating at or near 400 gpm, the system will be considered to be at steady state.

5.2.3 Operation and Maintenance Plan

A draft O&M Plan will be prepared for the extraction and conveyance system. The manual will contain the following information:

- Description of startup procedures
- Description of normal O&M procedures at design operating conditions
- A troubleshooting guide
- Complete system as-built drawings

- Spare parts list
- Emergency shutdown procedures
- Record keeping and testing requirements include the following elements:
  - Flow rate measurements
  - Extraction and conveyance system power consumption
  - Extraction and conveyance system inspection checklists and calibration records
    - Extraction and conveyance system optimization procedures
    - Description of O&M equipment and replacement components
      - Manufacturers' literature, procedures, and repair manuals

5.3 ROUTINE OPERATION AND MAINTENANCE

The system will be operated and maintained as described in the O&M Manual. Operation of the system will be optimized, and maintenance of the equipment will be performed as recommended by the manufacturers. Operating performance will be monitored to ensure optimization of the system to meet the performance criteria of the remedy. This optimization process is expected to be an ongoing process continuing over the life of the remedy.

Topics covered under routine O&M are summarized below; and will be presented in more detail in the O&M Manual.

5.3.1 System Operation

The operation of the extraction system will be optimized to maximize extraction of contaminated water and minimize cost while maintaining the safety of the workers, the public, and the environment in highest priority

5.3.2 Data Collection from System Instrumentation

In order to monitor the performance of the extraction process, data will be routinely downloaded from the SCADA system. This data will include water levels (tanks and wells) flow rates (submersible and transfer), cumulative totalized volumes from individual wells and the transfer pumps, motor runtimes, and extracted groundwater total volumes from individual wells. Cumulative mass of contaminants pumped from wells will be calculated based on laboratory analytical concentrations and volume of water removed for each well.

The data will be used to optimize the remedial action as well as evaluate the performance of the system extraction and conveyance system with respect to contaminant mass removal.

5.3.3 Maintenance Requirements

Routine maintenance will be performed on all components of the system. Routine service and preventive maintenance will be performed on all serviceable items according to manufacturers' specifications. Any repairs to the system will be made as soon as possible after the need is identified.

5.3.3.1 Maintenance Logs

Maintenance logs will be kept, recording such occurrences as equipment replacement, calibration, or repair, equalization tank cleanouts, conveyance pipe flushings, and any physical or operational changes to the system.

5.3.3.2 Lubrication of Rotating Equipment

A schedule for maintaining and lubricating all rotating equipment will be established based on the manufacturer requirements. In addition, the material to be used for maintenance and replacement (if required) will be specified. Adequate supply of spare parts will be maintained on site.

5.3.3.3 Replace System Pumps

The well pumps and transfer pumps will have a finite service life. Pump or motor replacements should be scheduled according to manufacturer recommendations in order to minimize system disruptions and maximize uptime.

5.3.3.4 Check Control System Logic and Alarms

Procedures and frequencies for checking control system logic and alarms will be specified to ensure that the control system is functioning as required and to prevent false alarms or alarm failures. Records of maintenance performed, including failures, will be maintained with the O&M manual.

5.3.3.5 Wells, Wellheads, and Piping

All wellheads and piping areas, well boxes, manways, and access areas will be kept neat, clean, and free of trash, debris, waste materials, liquids, and rainwater. Any leaks found in wellheads or piping will be repaired immediately. All valves will be kept operable and properly adjusted, and all sampling ports maintained in usable condition. During routine inspections, pipe hold-downs and pipe supports will be checked, and bolts tightened as necessary. Underground piping will be monitored on a routine basis that will be specified in the O&M Plan.

In addition, well fouling by iron bacteria has been identified as a persistent problem for wells installed in the subject area (BNI, 1998b). To mitigate this problem, a well monitoring and maintenance program will be developed. This program will assist in prolonging the life of the wells and ensuring optimal extraction rates during the life of the project through a scheduled, budgeted program. Field test kits will be used to indicate if a well is biofouled and to indicate which wells may need diagnostic evaluation (i.e., analysis of extracted groundwater for microbial plate counts). Wells found to be in the early stages of biofouling should be treated sooner rather than later. A formal well monitoring and maintenance program will be developed and included in the O&M Manual.

5.3.3.6 Conveyance Piping and Equalization Tank Sediment Control

The conveyance pipe and equalization tank will undergo periodic cleaning to remove sediment and scale. Flushing ports will be installed at strategic locations along the conveyance pipeline to permit connection to a high-pressure water source to clear the line of sediment and scale. The equalization tanks will be cleaned out during scheduled maintenance.

5.3.4 Groundwater Sampling

Groundwater sampling will be conducted as a component of remedial action monitoring, and is discussed in Section 7.

5.3.5 Extraction and Conveyance System Performance Evaluation

5.3.5.1 Evaluation of Wellhead Data

Wellhead data, including flow rate, pressure, and water levels, will be used to optimize mass removal while meeting ECL requirements. Wellhead data will be combined with hydrogeologic data to optimize the removal of TCE and other constituents.

5.3.5.2 Rebound Testing

Rebound testing will be performed when wellhead concentrations have reached asymptotic levels to evaluate the mass transfer of the remaining TCE. Rebound testing will be performed by shutting down the entire extraction system or individual groups of wells. Water samples will be collected and compared to pre-shutdown concentrations to evaluate if there is residual contamination in the previously dewatered soil.

6. GROUNDWATER REMEDIATION ENHANCEMENT USING SOIL VAPOR EXTRACTION

Groundwater remediation enhancement using SVE was evaluated by Earth Tech as part of a pilot test at wells 24EX3OB1 and 24EX6OB2 to evaluate the viability of SVE as a means of accelerating contaminant mass removal. Wells 24EX3OB1 and 24EX6OB2 were selected because they are located in an area of elevated TCE concentrations in groundwater. The primary mechanism of remedial enhancement resulting from SVE is removal of vapor-phase VOCs from dewatered soil in the capillary fringe and the upper portion of the aquifer.

To enhance the mass removal of VOCs as part of the groundwater remedy, a SVE system will be operated in the hot spots near Buildings 296 and 297. Wells 24EX3OB1 and 24EX6OB2 will be used as the primary vapor extraction wells because of the elevated concentrations of TCE detected in these wells. Other wells that may be used as extraction points include: 24EX3, 24EX3OB2, 24EX4, 24EX4OB1, 24EX4OB2, 24EX5OB2, 24EX6, and 24EX6OB1. Table 8 presents the well construction details for these wells.

Vapor extraction is planned to occur sequentially and at one well at a time using a trailer-mounted SVE system. Extraction of soil vapor from a particular well will be continued until influent vapor concentrations decrease and it becomes apparent that mass removal is no longer effective. If mass is not being removed effectively, the vapor extraction system will be moved to the next well in the sequence. Rebound effects will be examined for each well and will be used to determine if additional mass removal should be performed.

Based on the results of step-drawdown tests reported in the *Final Technical Memorandum Pre-Design Investigation* (Earth Tech, 2004b), it is anticipated that vapor extraction flow rates will range from 50 to 70 standard cubic feet per minute with a vacuum ranging from 5.5 to 10.5 inches mercury. VOC concentrations are anticipated to be in the range of 5 - 30 microgram per liter.

The extraction system will include the existing wells, 1-½-inch conveyance piping or hose, a trailer-mounted 100 standard cubic feet per minute blower unit with control panel, and two

1,000 pound carbon vessels (piped in series) as vapor control equipment. A conceptual SVE process diagram is shown in Figure 5.

The influent, midpoint, and effluent vapor will be regularly monitored and sampled. Vapor samples will be collected monthly for off-site laboratory analysis of VOCs using EPA Method TO-15. At startup and shutdown of each vapor extraction well, vapor samples will be obtained in Summa canisters; routine monthly samples for laboratory analysis will be obtained in Tedlar bags.

Field tests for VOC concentrations will be performed weekly with a PID. Influent sample results will be used to estimate extraction time for a particular well, to adjust flow rates, to terminate extraction from a particular well, or to rotate through the sequence of wells. Midpoint and effluent samples results will be used to estimate vessel carbon change-outs and to comply with substantive requirements. Spent carbon generated during the change-outs will be sampled and analyzed for disposal to a facility permitted to accept CERCLA waste. For waste characterization of the spent carbon, a sample will be analyzed for VOCs using EPA Methods 1311/8260. Disposal options will be evaluated based on the analytical results. Based on spent carbon analyses reported in the *Final Technical Memorandum, Pre-Design Investigation* (Earth Tech, 2004b), it is anticipated that the carbon will be non-hazardous and suitable for regeneration.

As listed in the ROD, the applicable or relevant and appropriate requirements for the vapor treatment units are the South Coast Air Quality Management District's Rule 1303 and 1401. Rule 1303 is applicable when the net emissions increase exceeds 1 pound per day of any non-attainment air contaminant for a given unit; the guidelines generally require the use of a carbon adsorber to control off-gas. Rule 1401 requires that the applicant demonstrate that the cumulative impact of emissions from a new or modified source and all other permitted units owned or operated by the applicant within 100 meters of a source are below a maximum individual risk of 10^{-6}.

7. REMEDIAL PERFORMANCE MONITORING

The SGU remedy involves groundwater extraction and treatment to remove VOCs (primarily TCE) dissolved in groundwater. Additionally, groundwater extraction and treatment will be performed for the principal aquifer off-station in association with the IDP.

The SGU remedy has been designed to result in compliance with the following RAOs specified in the OU1 and OU2A ROD:

- Reduce VOC concentrations in the SGU to federal or state cleanup levels;
- Prevent use of groundwater containing VOCs at concentrations exceeding cleanup levels;
- Prevent VOCs at concentrations above cleanup levels from migrating beyond the SGU.

The locations of the extraction wells and the proposed extraction strategy are based upon the results of a comprehensive groundwater flow and contaminant transport model developed for the SGU and principal aquifer (Earth Tech, 2003b). The results of the groundwater modeling indicate that the proposed groundwater extraction strategy will result in compliance with RAOs. Due to a limitation in the average total extraction rate allowed by the IDP settlement agreement (400 gpm), the SGU remedy will not result in capture of all VOCs in the off station portion of the SGU plume, although the highest off station concentrations will likely be captured. However, groundwater modeling results suggest that off station VOCs not removed by the SGU extraction wells will ultimately be captured by the principal aquifer extraction wells (i.e., ET-1 and ET-2).

The SGU remedy utilizes aggressive extraction and hydraulic isolation in the high concentration source area, coupled with hydraulic containment at the station boundary. The SGU is lithologically heterogeneous, especially in the source area, with alternating coarse and fine-grained zones. Although water and contaminants can be readily removed from the coarse-grained zones, extended remediation times are likely in the source area as contaminants diffuse from the fine-grained zones to the coarse-grained zones. However, since contaminants migrate down gradient primarily due to advection within the coarse-grained units, and concentration gradients are subdued beyond the source area, diffusion-limited conditions are not anticipated down gradient of the source area. The proposed SGU

extraction wells have been designed to extract groundwater from the entire vertical zone of contamination. Although the majority of water will be produced from the coarse-grained units, contaminants from the fine-grained units will be removed as they diffuse into the coarse-grained units.

Performance monitoring of the SGU remedy will be performed in accordance with EPA guidance (EPA, 1994) to achieve the following objectives:

- Evaluate the extent of hydraulic containment
- Assess the status of aquifer restoration
- Allow for the optimization of system performance
- Appraise compliance with RAOs

The wells proposed for performance monitoring are listed on Table 9 and are shown on Figures 6 and 7. The extraction well locations and screened intervals were selected using the OU1 and OU2A groundwater flow and transport model (Earth Tech, 2003b) The extraction wells were designed in order to aggressively remove and hydraulically isolate the source area, and provide hydraulic containment at the station boundary. Predicted groundwater flow pathlines resulting from extraction from the SGU and principal aquifer extraction wells are shown on Figures 6 and 7. The SGU extraction wells will be sampled and monitored as part of the regular O&M of the extraction and conveyance system.

The extraction well vaults are not considered a confined space according to the OSHA definitions in 20 CFR 1926.21 B iii. However, prior to entering the well vaults, safety precautions will be performed: air within the vaults will be monitored (via PID , 4-gas, and LEL/O2 meter) for the presence of a toxic, flammable, and oxygen deficient atmosphere Well vaults will be entered only after air monitoring indicates it is safe to do so.

Extracted VOC concentrations will be used to optimize system performance. In addition to the monitoring wells specified on Table 9, extraction wells shutdown due to low concentrations at system startup or due to remedy progression will be utilized as monitoring wells for measurement of VOC concentrations and groundwater elevations.

Although specific monitoring well locations and monitoring parameters are presented in this monitoring plan, revisions to this monitoring plan may be necessary during the course of remedial action. Implementation and optimization of the SGU remedy will be a dynamic and iterative process based upon monitoring data collected after startup. Therefore, a certain degree of flexibility has been incorporated into the monitoring plan by including decision flow. This will allow successive monitoring events to be based on the results of previous monitoring, thereby minimizing the collection of unnecessary data, maximizing data quality, and optimizing system performance. In addition, the performance monitoring program will be reviewed during the five-year review process mandated by CERCLA. The decision flow chart for the performance monitoring plan is shown on Figure 8, and is based directly on EPA guidance (EPA, 1994). The decision flow chart for determining monitoring and sampling frequency is shown on Figure 9.

7.1 PROPOSED MULTI-LEVEL MONITORING WELLS

Ten multi-level monitoring wells are proposed in order to eliminate data gaps, allow for accurate assessment of remedy performance, and to provide data for remedy optimization. The locations of the proposed wells (24MW08, 24MW09, 24MW10, 24MW11, 24MW12, 24MW13, 24MW14, 24MW15, 24MW16, and 24MW17) are shown on Figure 6. The wells will be constructed using multi-level ports (i.e., West-Bay, Solinst, or equivalent) or nested one- or two-inch diameter PVC screens. Wells 24MW08, 24MW16, and 24MW17 will likely be constructed using multi-level ports, and 24MW09 through 24MW15 will likely be constructed using nested PVC. Each screen/port will be 10 feet or less in length, and each monitoring well location will consist of approximately 4 to 6 screens/ports for accurate vertical resolution of VOC concentrations and hydraulic heads. The wells will be completed primarily within the SGU, although 24MW08, 24MW16, and 24MW17 will extend into the principal aquifer. Estimated screen intervals for each proposed multi-level well are listed on Table 9. The screen intervals have been estimated based upon current lithologic interpretation, and are subject to change based upon conditions encountered during drilling. For example, a screen would be more advantageously placed directly above a fine-grained unit rather than completely within a fine-grained unit.

24MW08 will be used to monitor VOC concentrations and groundwater elevations immediately down gradient of the VOC source area (i.e., 500 µg/L hotspot). 24MW09, 24MW10, 24MW11 and 24MW12 will be used to fill data gaps and monitor system performance between the source area and the station boundary. 24MW13, 24MW14, and 24MW15 are located between extraction wells at the station boundary, and will be used to confirm hydraulic containment and evaluate VOC concentrations at the station boundary. 24MW16 and 24MW17 will provide data to evaluate on-station plume capture, and to assess the fate of the off-station VOCs in the SGU, most notably TCE in excess of 50 µg/L.

7.2 HYDRAULIC CONTAINMENT MONITORING

Groundwater elevations will be measured in order to determine the flow regime induced by groundwater extraction. Groundwater elevations will be measured weekly from the on-station monitoring and extraction wells upon system startup until steady-state conditions have been established. The steady-state elevations will be mapped and used to generate flow nets. In accordance with EPA guidance (EPA, 1994), the flow nets will be used to evaluate hydraulic gradients, groundwater flow directions, and capture zones of individual wells and the cumulative area of on-station hydraulic containment. Vertical gradients will also be evaluated using differential heads measured from nested monitoring wells screened at varying depths.

Monitoring of groundwater elevations will be performed quarterly upon establishment of steady-state conditions. However, elevations will be measured more frequently as required if the groundwater extraction strategy is significantly modified, or after a prolonged shutdown of the wellfield. The elevation monitoring would then resume on a quarterly schedule upon dissipation of observed transient effects and reestablishment of steady-state conditions.

7.3 AQUIFER RESTORATION MONITORING

VOC concentrations will be monitored to assess the status of aquifer restoration. VOC concentrations will be measured from the extraction wells and monitoring wells prior to system startup to establish a baseline plume configuration. The extraction wells will be

sampled monthly during the first year of system operation The measured VOC concentrations and extraction well flow rates will be used to calculate the mass removal rates from each extraction well. On-station and off-station monitoring wells will be sampled quarterly during the first year of system operation to evaluate the effects of groundwater extraction on the VOC plume

After the initial year of system operation, the frequency of sampling will be based on the decision flow chart presented in Figure 9. In accordance with this flow chart, based on the initial four rounds of sampling results, it is anticipated that groundwater sampling at each monitoring well/port will be conducted quarterly, semiannually, and/or annually until the RAOs have been met. Monitoring locations, frequencies, and durations will be determined based on observed VOC trends. Analytes will include VOCs, general chemistry/TDS, and natural attenuation parameters

7.4 COMPLIANCE WITH RAOS AND ECLS

The results of remedial performance monitoring will establish system function versus RAOs. The evaluation of hydraulic containment and VOC concentration distribution will determine if the SGU remedy is preventing VOCs in excess of MCLs from migrating beyond the SGU. The measured VOC concentrations will be compared to state and federal cleanup levels to gauge remedial progress and project remedial durations

In addition to RAOs, the contaminant concentrations in the cumulative flow from all extraction wells will be monitored to ensure compliance with the ECLs at the point of connection of DON's SGU conveyance pipeline to the modified-IDP pipeline. Extracted groundwater from the SGU remedy wells will be sampled downstream of the transfer pump and upstream of the point of connection to the modified-IDP pipeline. The parameters to be monitored are presented in Appendix A of this design submittal as well as in Appendix 2 of the Settlement Agreement (Attachment E to the ROD [June 2002]). The proposed initial monitoring frequency for VOCs at the point of connection to the IDP will be weekly for the first month and monthly thereafter for the first year; the other analytes will be monitored monthly for the first year.

ECLs will be used as evaluation criteria for temporary shutdown of the IDP. If the concentrations or equivalent mass levels at the point of connection of the DON's SGU conveyance pipeline are reported in excess of the concentrations listed in the Settlement Agreement, the party discovering the exceedances will promptly notify the DON, EPA, DTSC, Department of Health Services (DHS), and RWQCB. In this case, OCWD/IRWD may temporarily shut down the operation of CCMI without further notice.

Within 7 calendar days following the initial notification, the parties will determine whether through adjusting flow rates, blending, or similar measures the CCMI can continue to adequately treat extracted groundwater to ensure compliance with applicable federal and state drinking water standards at the point of distribution into the water supply infrastructure following treatment. If the standards can be met, the OCWD/IRWD will immediately resume operations

If OCWD/IRWD determines that the drinking water standards cannot be met at the point of distribution into the water supply infrastructure following treatment, OCWD/IRWD may continue temporary shutdown of the IDP. In such case the OCWD/IRWD will develop a response plan within 60 calendar days for approval by DON and concurrence by EPA and Cal/EPA (including DTSC, DHS, and RWQCB). The response plan will propose all practicable means available to minimize the extent and duration of termination of all or a portion of the CCMI groundwater extraction and/or treatment activities, along with a timetable for resumption of operations.

7.5 SYSTEM OPTIMIZATION, MASS REMOVAL ENHANCEMENT AND REBOUND EVALUATION

The capture zone analysis, mass removal rates, and VOC plume distribution will be used to optimize system performance. Extraction strategies will be revised based on performance data to maximize mass removal and provide effective hydraulic containment Potential optimization considerations include alternate pumping to prevent the development of stagnation zones, and pulsed pumping during diffusion-limited conditions. The OU1 and OU2A groundwater flow and contaminant transport model (Earth Tech, 2003b) may be used to evaluate potential optimization strategies.

SVE will be performed at wells located in the source area to enhance the mass removal of VOCs as part of the groundwater remedy by removing VOCs from the dewatered soil in the capillary fringe and upper portion of the aquifer. SVE will be implemented for mass removal at locations and durations determined to be technically and economically beneficial. Wells likely to be used during SVE evaluation include but are not limited to the well clusters associated with 24EX3, 24EX4, 24EX5, and 24EX6 located in the former VOC source area (i e , hangars 296 and 297).

Rebound evaluation will be performed at individual wells when VOC concentrations in groundwater reach an asymptote. Extraction will be terminated and VOC concentrations and groundwater elevations will be measured every month until the transient effects of shutdown have dissipated. If concentrations increase significantly compared to steady-state concentrations during pumping, extraction will be resumed. Multiple cycles of dewatering, SVE, and re-saturation may be required to mobilize residual VOCs from fine-grained sediments. Extraction will be terminated when concentrations no longer rebound significantly, or when it is no longer technically or economically beneficial.

8. SITE RESTORATION

Following verification of cleanup, a technical report will be issued to the FFA signatories requesting closure. Upon approval of the closure request, the SGU extraction system will be decommissioned. Major tasks to be accomplished as part of system decommissioning are abandonment of the extraction piping network and the wells. These tasks are described in the following sections.

8.1 PIPING ABANDONMENT

Aboveground components will be flushed, dismantled, cut into convenient lengths for transport, and disposed of. Disposal alternatives such as landfill disposal, recycling, or salvage will be explored during the decommissioning process.

Easily accessible belowground piping will be removed, and inaccessible piping will be abandoned-in-place according to the standards of the County of Orange. All surface connections of abandoned-in-place piping will be plugged and capped. Surfaces will be refinished as necessary to match existing pavement, concrete, or landscape

8.2 WELL ABANDONMENT

The SGU extraction wells will be abandoned upon closure approval. Well abandonment will conform to the well-abandonment standards of the County of Orange per Article 2 of the Orange County Code (County of Orange, 2003), the Water Well Standards (CDWR, 1981) and the California Well Standards (CDWR, 1991). Removable equipment will be collected from each well vault. Where no possibility of cross contamination between different zones exists, wells may be abandoned by first removing the well vault, and the first five feet of the well casing followed by pressure-grouting with an approved sealing material that flows through the well screen perforations and fills the well casings.

Where cross-contamination is a concern, wells will be destroyed by over-drilling the entire well, and removing the well casing, filter pack, annular seal, and well box. The borehole will then be filled with an approved sealing material.

9. REFERENCES

Bechtel National, Inc. (BNI). 1996. *Draft Groundwater Remediation Pilot Test Report, Marine Corps Air Station, El Toro, California*. San Diego, California: NFECSW SDIEGO. December.

BNI. 1997a. *Draft Final Phase II Groundwater Feasibility Study Report, Operable Unit 2A – Site 24, Marine Corps Air Station, El Toro, California*. San Diego, California: NFECSW SDIEGO. December.

BNI. 1997b. *Draft Final Phase II Remedial Investigation Report, Operable Unit (OU) 2A – Site 24, Marine Corps Air Station, El Toro, California*. San Diego, California: NFECSW SDIEGO. June.

BNI. 1997c. *Draft Final Phase II Vadose Zone Feasibility Study Report, Operable Unit 2A – Site 24, Marine Corps Air Station, El Toro, California*. San Diego, California: NFECSW SDIEGO. March.

BNI. 1997d. *Draft Soil Vapor Extraction Pilot Test Summary Report, Site 24 – VOC Source Area, Marine Corps Air Station, El Toro, California*. San Diego, California: NFECSW SDIEGO. November.

BNI. 1998a. *Draft Final Engineering Design Report, Vadose Zone Remediation, Site 24, Marine Corps Air Station, El Toro, California*. San Diego, California: NFECSW SDIEGO. December.

BNI. 1998b. *Draft Groundwater Remediation Pilot Test Report – Site 24, Marine Corps Air Station, El Toro, California*. San Diego, California: NFECSW SDIEGO. December.

BNI. 1999. *CLEAN II Program Procedures Manual*. San Diego, California: NFECSW SDIEGO.

Brown and Caldwell. 1986. *Initial Assessment Study of Marine Corps Air Station, El Toro, California*. CLE-C01-01F018-A2-016. May.

California Department of Water Resources (CDWR). 1981. *Water Well Standards: State of California, Bulletin 74-81*. Sacramento, California.

CDWR. 1991. *California Well Standards. State of California, Bulletin 74-90*. Sacramento, California.

California Regional Water Quality Control Board, Santa Ana Region (RWQCB). 1995. *Santa Ana Region Basin Plan*.

CDM Federal Programs Corporation. 2003. *Final Groundwater Monitoring Report, March 2003 Monitoring Round 17, Marine Corps Air Station, El Toro, California*. San Diego, California. July.

County of Orange. 2003. *Codified Ordinances*. California. March.

Department of the Navy (DON). 1997. *Draft Final Interim Record of Decision (ROD), Operable Unit 2A – Site 24 – VOC Source Area, Vadose Zone, Marine Corps Air Station, El Toro, California*. San Diego, California: Naval Facilities Engineering Command. September.

DON. 2000. *Guide for Architectural-Engineering Firms, A-E Guide*. San Diego. January.

DON. 2001. *Policy for Conducting Comprehensive Environmental Response, Compensation, and Liability Act (CERCLA) Statutory Five-Year Revisions*. November.

DON. 2002. *Record of Decision, Operable Unit 1, Site 18 – Regional Volatile Organic Compound Groundwater Plume, Operable Unit 2A, Site 24 – VOC Source Area, Former Marine Corps Air Station, El Toro, California*. San Diego, California: NFECSW SDIEGO. June.

Earth Tech, Inc (Earth Tech). 1999. *Draft System Evaluation and Optimization Report (SEOR), IRP Site 24 Vadose Zone Remediation, Marine Corps Air Station, El Toro, California*. San Diego, California: NFECSW SDIEGO. April.

Earth Tech. 2002. *Draft Final Site Closure Report, Vadose Zone Remediation, IRP Site 24, Volatile Organic Compounds Source Area, Former Marine Corps Air Station, El Toro, California*. San Diego, California: NFECSW SDIEGO. June.

Earth Tech. 2003a. *60 Percent Design Submittal, Marine Corps Air Station, El Toro, California*. San Diego, California: NFECSW SDIEGO. December.

Earth Tech. 2003b. *Technical Memorandum, Groundwater Modeling, Operational Unit 1 and Operational Unit 2A, Marine Corps Air Station, El Toro, California*. San Diego, California: NFECSW SDIEGO. October.

Earth Tech. 2004a. *Draft Geotechnical Memorandum, Shallow Groundwater Unit Remedy, IRP Site 24, Volatile Organic Compound Source Area, Former Marine Corps Air Station, El Toro, California*. San Diego, California: NFECSW SDIEGO. July.

Earth Tech. 2004b. *Final Technical Memorandum, Pre-Design Investigation for Shallow Groundwater Unit Remedy, IRP Site 24, Volatile Organic Compound Source Area, Former Marine Corps Air Station, El Toro, California*. San Diego, California: NFECSW SDIEGO. November.

Environmental Protection Agency, United States (EPA). 1991. *Estimating Potential Occurrence of DNAPL at Superfund Sites*. Quick Reference Fact Sheet.

EPA, United States. 1994. *Methods for Monitoring Pump-and-Treat Performance*, EPA/600/R 94/123. June.

EPA, United States, Region IX. 2002. *EPA Region 9 PRGs* [Preliminary Remediation Goals] *Tables*. October. San Francisco.

Herndon, R. L., and J. F. Reilly. 1989. *Phase I Report – Investigation of Trichloroethylene Contamination in the Vicinity of the Marine Corps Air Station, El Toro*. Prepared for Orange County Water District. March.

Jacobs Engineering Group Inc. (JEG). 1993a. *Marine Corps Air Station, El Toro, California Installation Restoration Program Final RCRA Facility Assessment Report*. July.

JEG. 1993b. *Marine Corps Air Station, El Toro, California. Installation Restoration Program Phase I Remedial Investigation Draft Technical Memorandum*. May.

JEG. 1996a. *Marine Corps Air Station, El Toro, California. Installation Restoration Program Draft Final Operable Unit 1 Interim Action Remedial Investigation/Feasibility Study*. Volume II of IX, Remedial Investigation Report. August.

JEG. 1996b. *Marine Corps Air Station, El Toro, California. Installation Restoration Program Draft Final Operable Unit 1 Interim Action Remedial Investigation/Feasibility Study*. Volume IV of IX, Interim Action Feasibility Study Report. August.

United States Army Corps of Engineers (USACE). 1999. *Design Guidance for Ground Water/Fuel Extraction and Ground Water Injection Systems*. Washington, D.C. November.

USACE. 2000. *Engineering and Design Operation and Maintenance of Extraction and Injection Wells at HTRW Sites*. Washington, D.C. January.

U.S. Marine Corps, U.S. EPA Region IX, Cal/EPA Department of Toxic Substances Control, and California Regional Water Quality Control Board. 1990. *Federal Facility Agreement*.

Weston Solutions, Inc. (WESTON). 2004. *Draft 90 Percent Design Submittal Shallow Groundwater Unit Remedy, IRP Site 24, Volatile Organic Compound Source Area, Former Marine Corps Air Station, El Toro, California*. San Diego, California: NFECSW SDIEGO. September.

WESTON. 2005. *Final Remedial Action Work Plan, Shallow Groundwater Unit Remedy, IRP Site 24, Volatile Organic Compound Source Area, Former Marine Corps Air Station, El Toro, California*. San Diego, California: NFECSW SDIEGO. January.

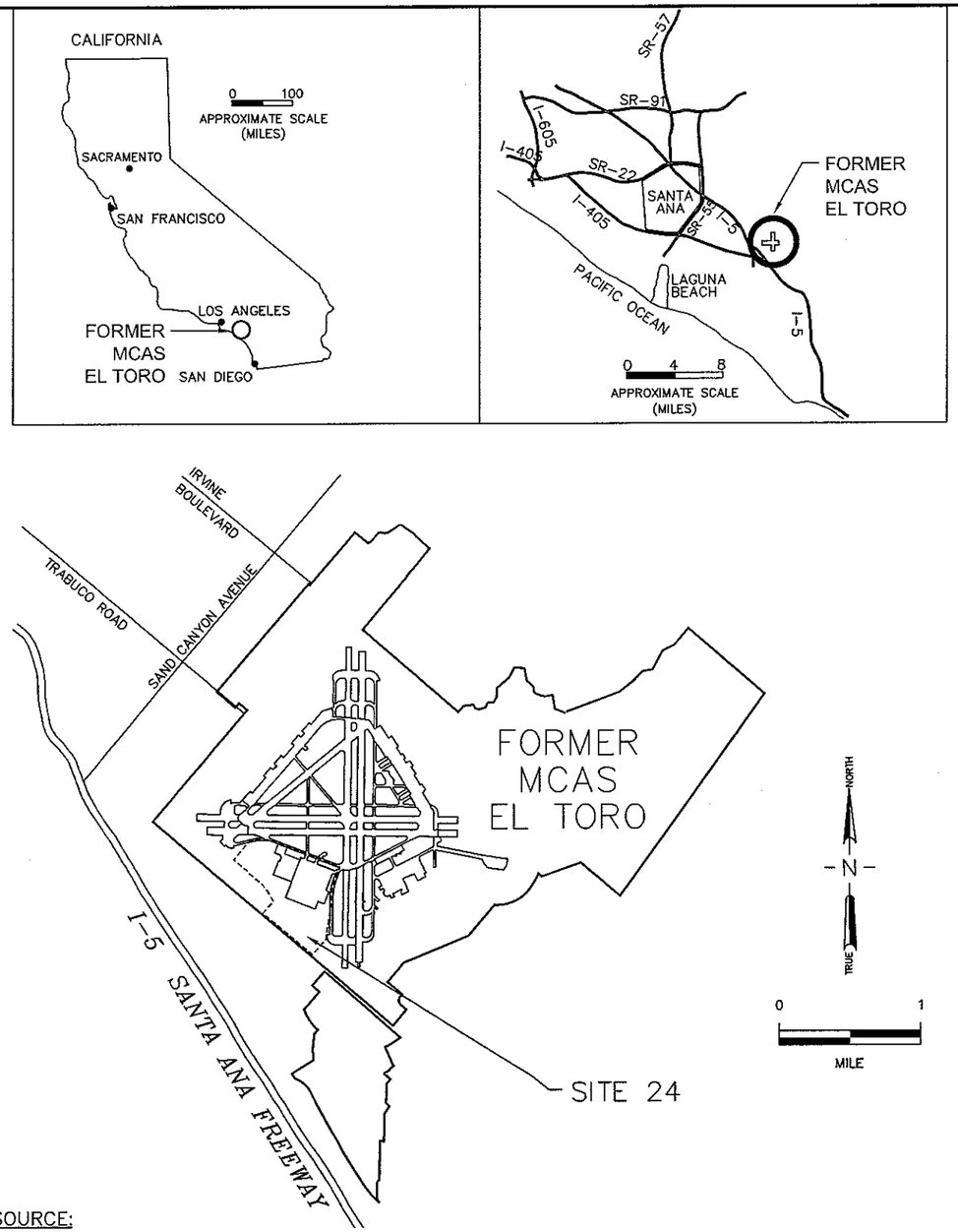

SOURCE:
EARTH TECH, INC. 60% DESIGN SUBMITTAL, REMEDIAL DESIGN SHALLOW GROUNDWATER UNIT REMEDY, IRP SITE 24, DECEMBER 2003, NAVAL FACILITIES ENGINEERING COMMAND CONTRACT N6272-94-D-0048.

FIGURE 1

WESTON SOLUTIONS

1575 Treat Boulevard
Suite 212
Walnut Creek, California
94598

PROJECT LOCATION MAP
IRP SITE 24 VOC SOURCE AREA, SGU REMEDY
FORMER MCAS EL TORO
Irvine, California

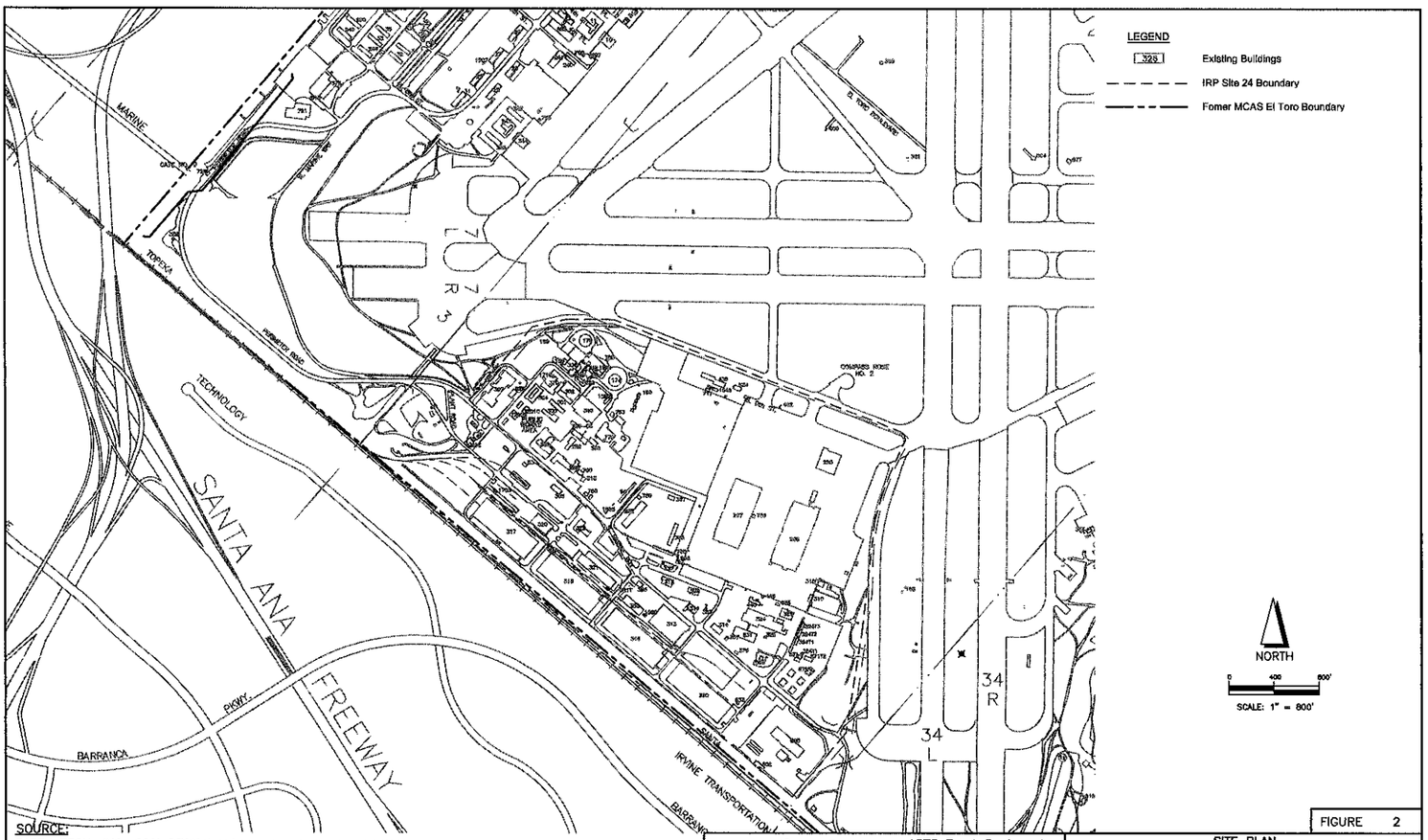

SOURCE:
EARTH TECH, INC. 60% DESIGN SUBMITTAL, REMEDIAL DESIGN SHALLOW GROUNDWATER UNIT REMEDY, IRP SITE 24, DECEMBER 2003, NAVAL FACILITIES ENGINEERING COMMAND CONTRACT N6272-94-D-0048.

WESTON SOLUTIONS
1575 Treat Boulevard
Suite 212
Walnut Creek, California
94598

FIGURE 2

SITE PLAN
IRP SITE 24 VOC SOURCE AREA, SGU REMEDY
FORMER MCAS EL TORO
Irvine, California

Activity ID	Activity Description	Orig Dur	Early Start	Early Finish
2100	Meetings	1,185	29SEP03A	30DEC06
2220	Draft RAWP	14	01NOV03A	13NOV03A
2230	Agency Review Draft RAWP	30	15NOV03A	03AUG04A
2240	Draft Final RAWP	60	01JUN04A	17SEP04A
2250	Agency Review Draft Final RAWP	30	18SEP04A	04NOV04A
2260	Final RAWP	30	05NOV04A	16DEC04
2320	Draft 90% Design	45	19APR04A	01JUN04A
2340	Agency Review Draft 90% Design	60	07JUN04A	02AUG04A
2350	Draft Final 90% Design/BCT Review	60	03AUG04A	01OCT04A
2382	Draft 100% Design Submittal	73	02OCT04A	13DEC04
2392	Final 100% Design Submittal	38	14JAN05	20FEB05
2400	Site Work	175	21FEB05	15AUG05
2500	Well Installation	205	26FEB05	20SEP05
2600	Piping Network Installation	60	11APR05*	09JUN05
2700	Point of Connection	30	24MAY05	22JUN05
2800	Instrumentation, Process Control	90	11APR05	10JUL05
2900	O&M	474	31AUG05	31DEC06
2910	O&M Reports	330	30JAN06*	31DEC06
21000	Drawings & Specifications	1,025	01NOV03A	29OCT05
21105	Draft O&M Manual	85	07MAR05	30MAY05*
21110	Draft Final O&M Manual	90	01JUN05	30AUG05
21120	Final O&M Manual	60	31AUG05	30OCT05

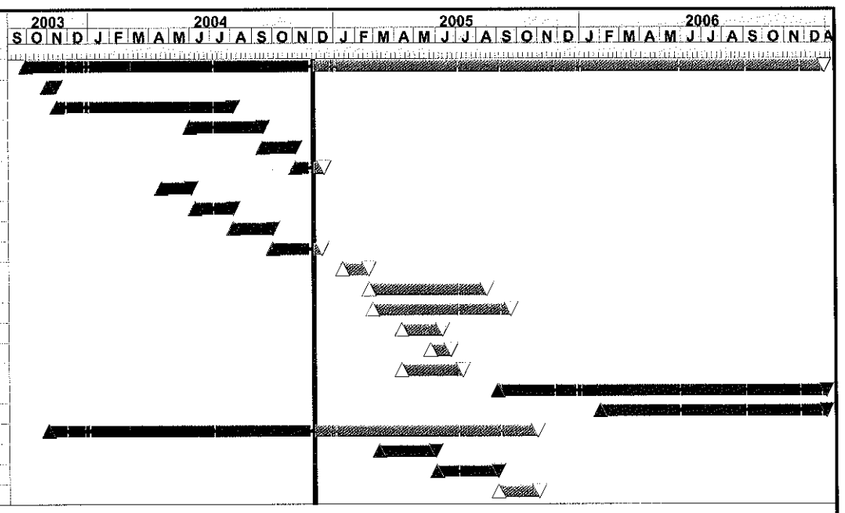

Start Date	29SEP03
Finish Date	31DEC06
Data Date	01DEC04

Early Bar
Progress Bar
Critical Activity

© Primavera Systems, Inc.

Sheet 1 of 1

El Toro MCAS - IRP Site 24
Project Schedule
Figure 3

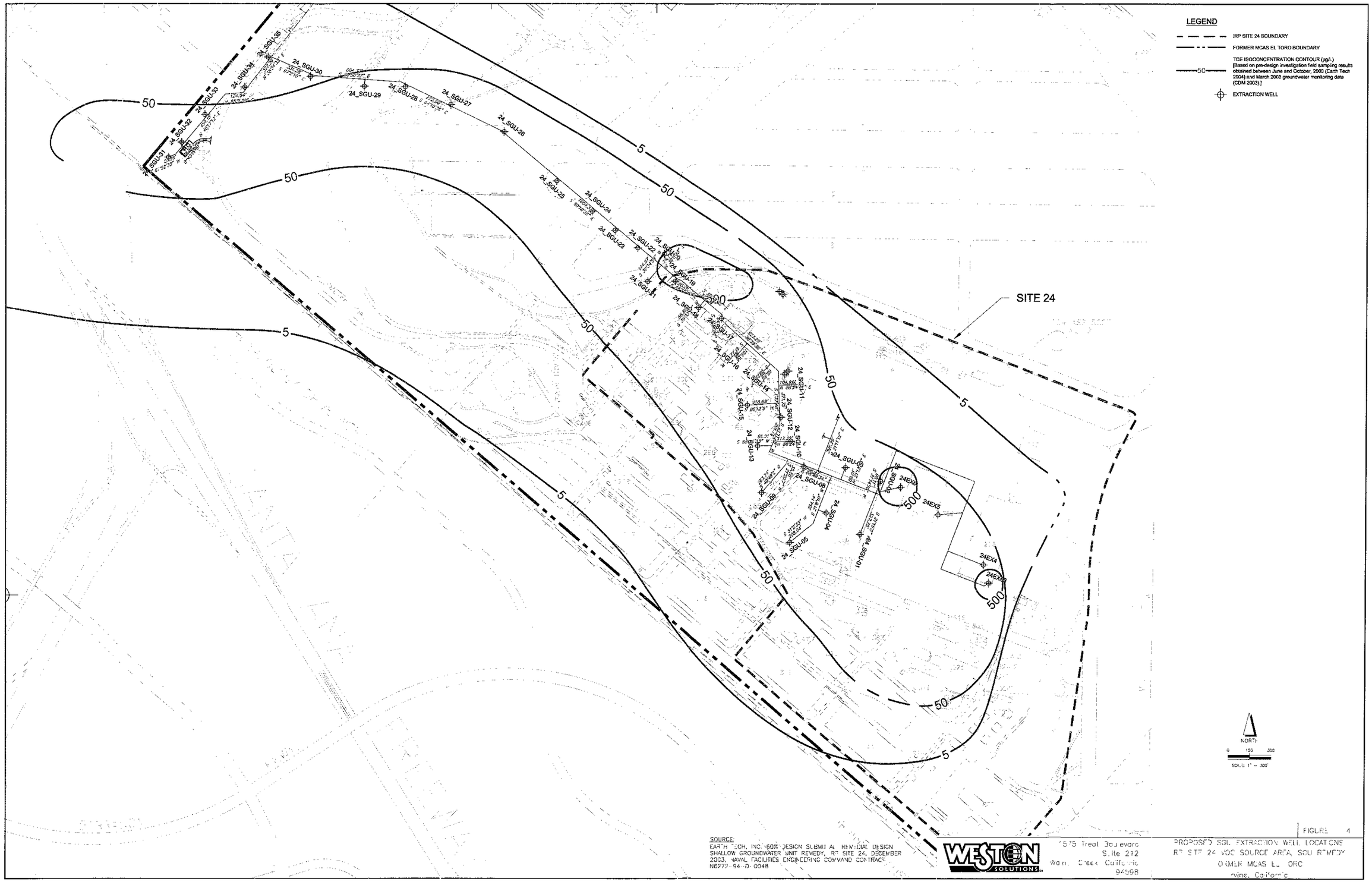

SOURCE:
EARTH TECH, INC. 60% DESIGN SUBMITTAL REMEDIAL DESIGN SHALLOW GROUNDWATER UNIT REMEDY, RP SITE 24, DECEMBER 2003, NAVAL FACILITIES ENGINEERING COMMAND CONTRACT N6779-94-D-0048

WESTON SOLUTIONS

1575 Treat Boulevard
Suite 212
Walnut Creek, California
94598

FIGURE 1

PROPOSED SGU EXTRACTION WELL LOCATIONS
RP SITE 24 VOC SOURCE AREA, SGU REMEDY
FORMER MCAS EL TORO
Irvine, California

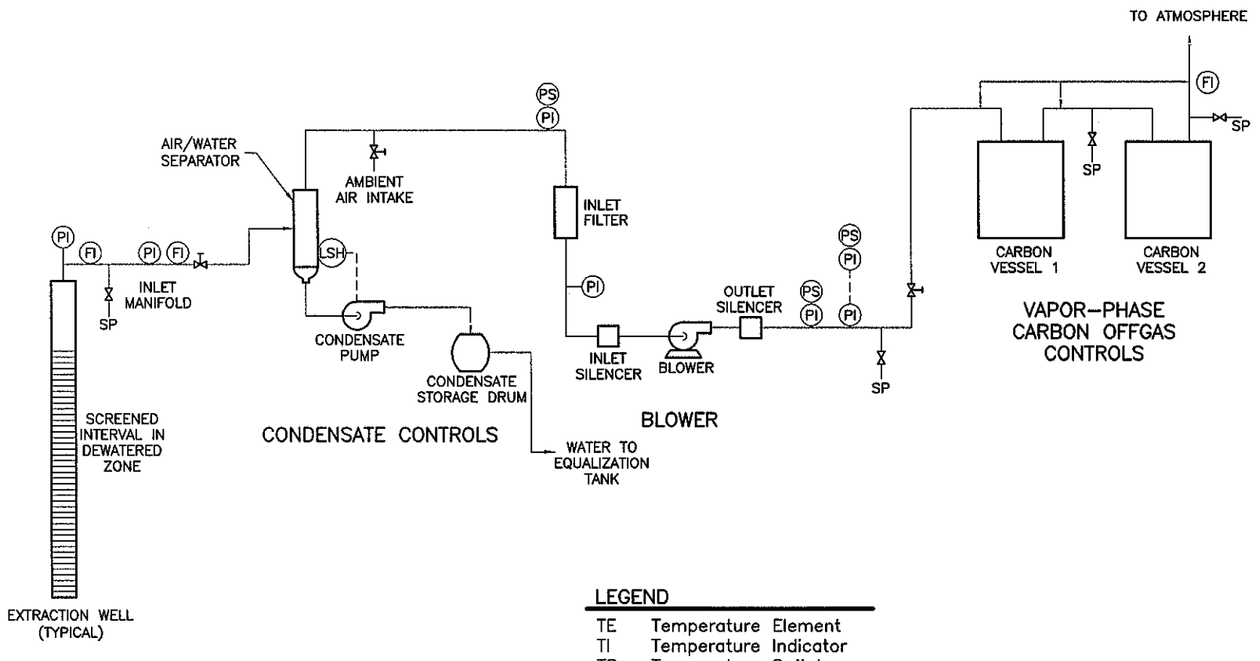

LEGEND

TE	Temperature Element
TI	Temperature Indicator
TS	Temperature Switch
FI	Flow Indicator
LSH	Level Switch High
PS	Presssure Switch
PI	Pressure Indicator
	Manual/Vacuum Relief Valve
SP	Sampling Port

FIGURE 5

WESTON SOLUTIONS

1575 Treat Boulevard
Suite 212
Walnut Creek, California
94598

SVE PROCESS DIAGRAM
IRP SITE 24 VOC SOURCE AREA, SGU REMEDY
FORMER MCAS EL TORO
Irvine, California

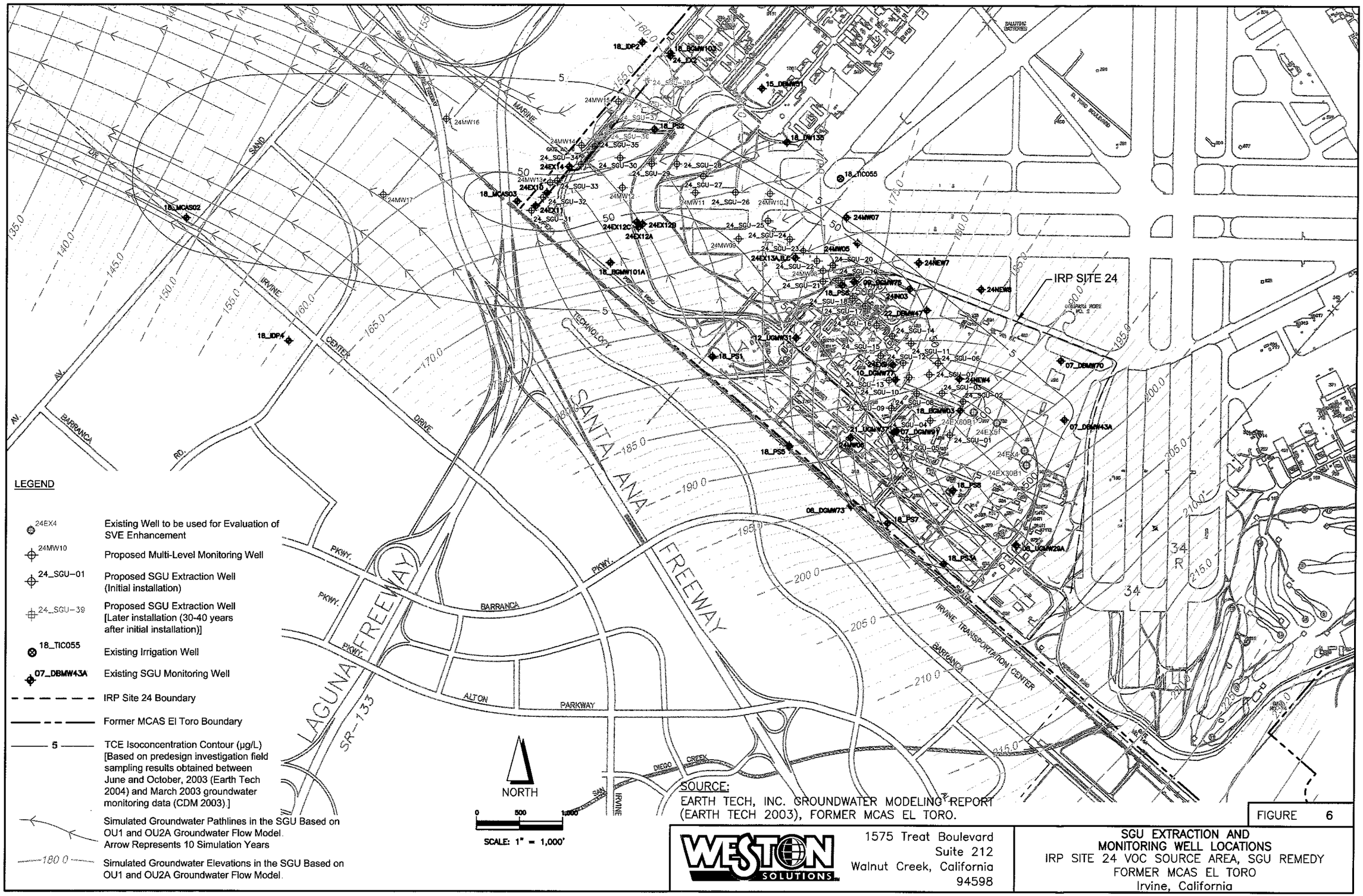

SOURCE:
EARTH TECH, INC. GROUNDWATER MODELING REPORT (EARTH TECH 2003), FORMER MCAS EL TORO.

FIGURE 6

WESTON SOLUTIONS

1575 Treat Boulevard
Suite 212
Walnut Creek, California
94598

SGU EXTRACTION AND MONITORING WELL LOCATIONS
IRP SITE 24 VOC SOURCE AREA, SGU REMEDY
FORMER MCAS EL TORO
Irvine, California

LEGEND

- ET-1 — Principal Aquifer Plume Extraction Well
- 18_MCAS-01 — Existing Groundwater Monitoring Well
- Former MCAS El Toro Boundary
- IRP Site 24 Boundary
- —5— TCE Isoconcentration Contour in the Shallow Groundwater Unit (µg/L) [Based on predesign investigation field sampling results obtained between June and October, 2003 (Earth Tech 2004) and March 2003 groundwater monitoring round (CDM 2003)]
- —5— TCE Isoconcentration Contour in the Principal Aquifer (µg/L) [Based on March 2003 groundwater monitoring data (CDM 2003)]
- Simulated Groundwater Pathlines in the Principal Aquifer Based on OU1 and OU2A Groundwater Flow Model (Earth Tech, 2003) and the Modified IDP's as Described in the 60% Supplemental Design Memorandum (Tetra Tech 2004)

NORTH

0 1,000 2,000 FEET

SCALE: 1" = 2,000'

SOURCE:
EARTH TECH, INC. TECHNICAL MEMORANDUM, PRE-DESIGN INVESTIGATION FOR SHALLOW GROUNDWATER UNIT REMEDY, IRP SITE 24, FORMER MCAS EL TORO. NOVEMBER 2004.

WESTON SOLUTIONS

1575 Treat Boulevard
Suite 212
Walnut Creek, California
94598

FIGURE 7

PRINCIPAL AQUIFER EXTRACTION AND MONITORING WELL LOCATIONS
IRP SITE 24 VOC SOURCE AREA, SGU REMEDY
FORMER MCAS EL TORO
Irvine, California

J:\EL-TORO-90-PERCENT\12-04\FIGURE-7.dwg

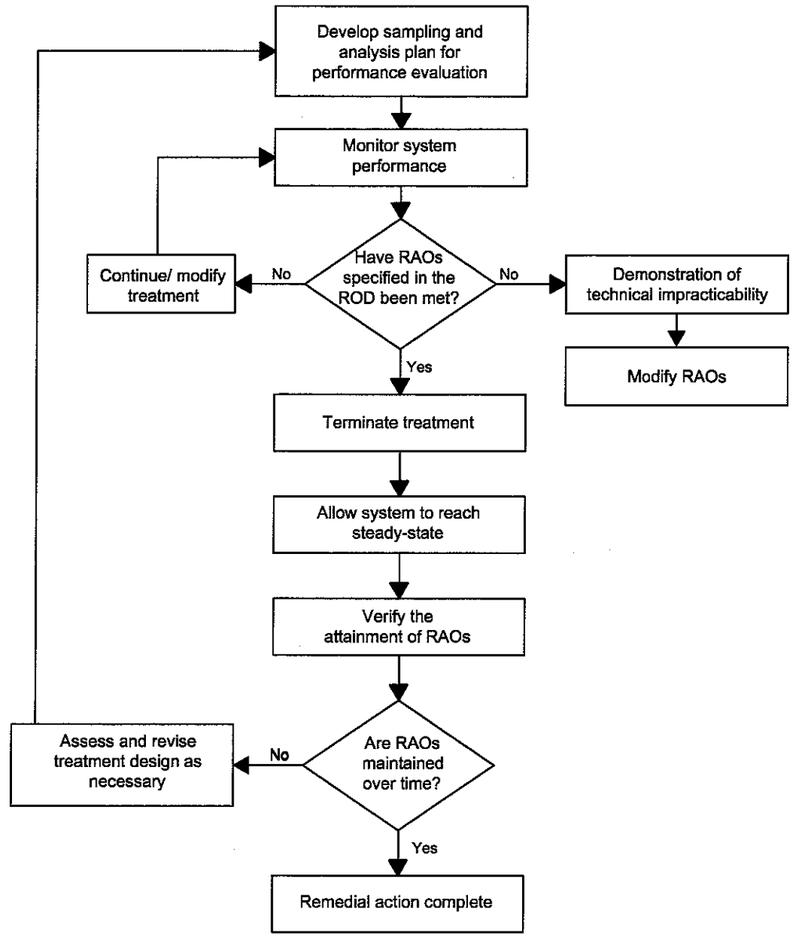

SOURCE:
EARTH TECH, INC. TECHNICAL MEMORANDUM, PRE-DESIGN INVESTIGATION FOR SHALLOW GROUNDWATER UNIT REMEDY, IRP SITE 24, FORMER MCAS EL TORO NOVEMBER 2004

FIGURE 8

WESTON SOLUTIONS

1575 Treat Boulevard
Suite 212
Walnut Creek, California
94598

DECISION FLOW CHART FOR PERFORMANCE MONITORING PLAN
IRP SITE 24 VOC SOURCE AREA, SGU REMEDY
FORMER MCAS EL TORO
Irvine, California

J:\EL-TORO-90-PRCENT\12-04\FIGURE-8.dwg

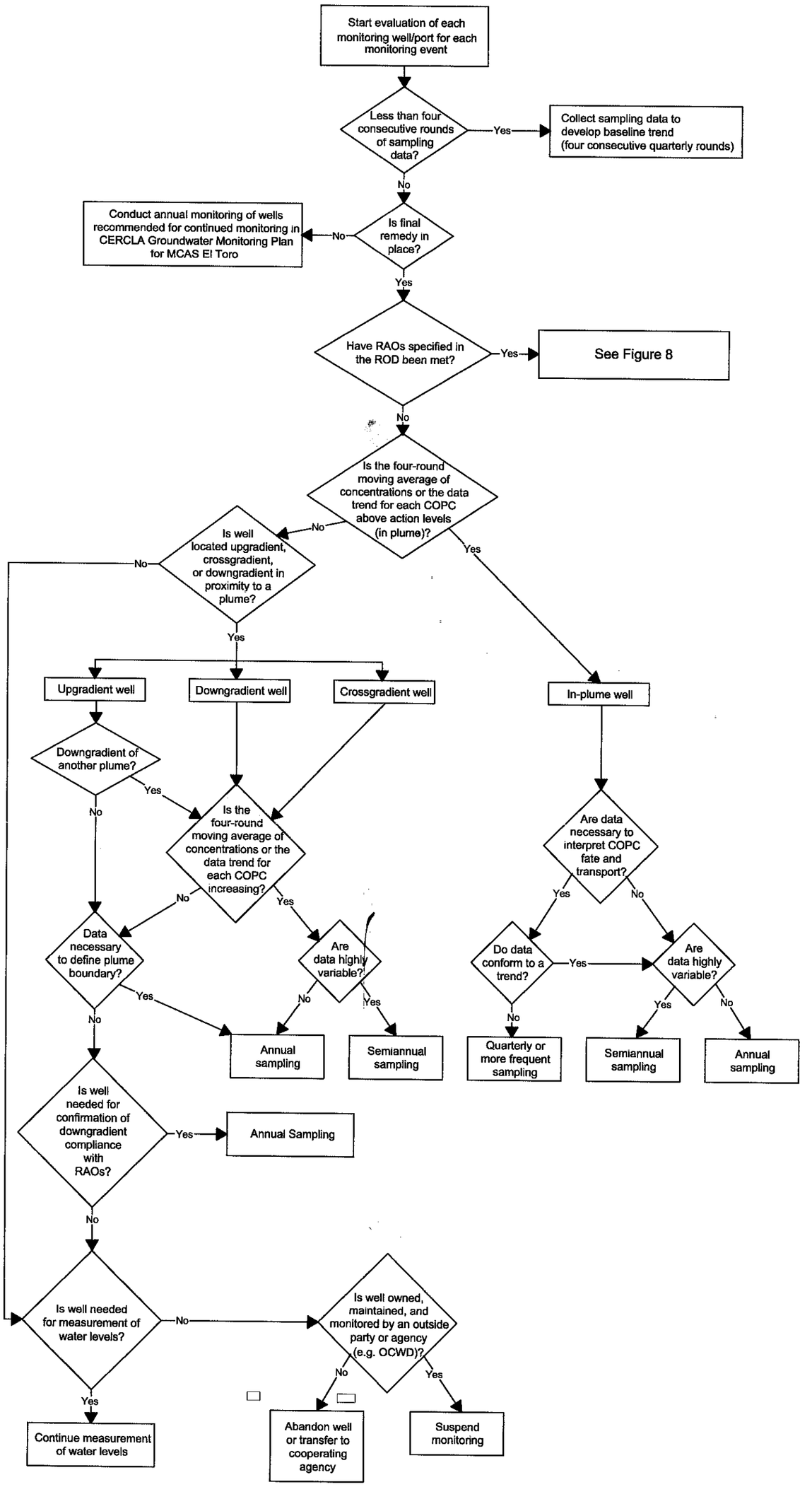

SOURCE:
EARTH TECH, INC. TECHNICAL MEMORANDUM, PRE-DESIGN INVESTIGATION FOR SHALLOW GROUNDWATER UNIT REMEDY, IRP SITE 24, FORMER MCAS EL TORO. NOVEMBER 2004

FIGURE 9

WESTON SOLUTIONS

1575 Treat Boulevard
Suite 212
Walnut Creek, California
94598

DECISION FLOW CHART FOR DETERMINING GROUNDWATER MONITORING FREQUENCY
IRP SITE 24 VOC SOURCE AREA, SGU REMEDY
FORMER MCAS EL TORO
Irvine, California

..:\EL-TORO-90-PERCENT\12-04\FIGURE-9.dwg

Table 1

ECLs for Contaminants of Concern in Groundwater
At Point of Connection of DON's SGU Conveyance Pipeline [a]

Volatile Organic Compound	ECL Concentration (µg/L)
1,1,1-TCA	200
1,1,2-TCA	5
1,1,2-Trichloro-1,2,2-trifluoroethane	0.2
1,1-DCA	5
1,1-DCE	6
1,2-DCA	1.8
1,2-DCE (total)	10
cis-1,2-DCE	6
Benzene	4.5
Carbon Disulfide	1.8
Carbon Tetrachloride	3.6
Chloroform	80
Ethylbenzene	680
Methyl Chloride	2.8
Methylene Chloride	5
PCE	5.2
Phenol	17.7
TCE	237
Toluene	150
Xylene (total)	1750

µg/L *microgram per liter*
DCA *dichloroethane*
DCE *dichloroethene*
DON *Department of the Navy*
ECL *Evaluation Concentration Levels*
NA *not applicable*
PCE *tetrachloroethene*
SGU *Shallow Groundwater Unit*
TCA *trichloroethane*
[a] *Based on the ROD and settlement agreement (DON 2002)*

Table 2

Cleanup Standards for Contaminants of Concern in Groundwater

Volatile Organic Compound	Concentration (µg/L)	
	Federal MCL [a]	California MCL [b]
Benzene	5	1
Bromodichloromethane	100 [c]	100
Carbon Tetrachloride	5	0.5
Chloroform	100 [c]	100
Chloromethane	1.5 [d]	NA
Dibromochloromethane	100 [c]	100
1,2-Dichloromethane	5	0.5
1,1-Dichloroethene	7	6
1,2-Dichloropropane	5	5
Tetrachloroethene	5	5
1,1,2-Trichloroethane	5	5
Trichloroethene	5	5

µg/L *micrograms per liter*
MCL *Maximum Contaminant Level*
NA *No MCL has been established for this chemical.*
[a] *Source: EPA Safe Drinking Water Act, 40 CFR § 141. 01 July 1992*
[b] *Source: California Code of Regulations, Title 22, § 64439, Requirements, and § 64444, Maximum Contaminant Levels*
[c] *MCL for total trihalomethanes is the sum of the concentrations of chloroform, bromodichloromethane, dibromochloromethane, and bromoform.*
[d] *Risk-based concentration is the EPA Region IX (2002) preliminary remediation goal for chloromethane*

Table 3

Chemical-Specific ARARs for Remedial Action at IRP Site 24

Action/Requirement	Citation	ARAR [a] Determination	Comments
FEDERAL			
Resource Conservation and Recovery Act [b]			
TCLP regulatory levels; persistent and bioaccumulative toxic substances TTLCs and STLCs	Title 22 CCR § 66261.24(a)(1)	Applicable	Using the RCRA definition of hazardous waste, groundwater extracted from IRP Site 24 extraction wells would not be a listed waste. However, there is the potential for groundwater from some of the on-station extraction wells to exceed TCLP limits for TCE, making it a characteristic hazardous waste. None of the off-station extraction wells could exceed TCLP limits. Also, the maximum estimated influent concentrations for both the on-station and off-station treatment systems are below TCLP limits. In addition, there is the potential for some of the spent carbon to exceed TCLP limits for TCE, making it a characteristic hazardous waste.
Groundwater and vadose zone protection standards: owners/operators of RCRA treatment, storage, or disposal facilities must comply with conditions in this section designed to assure that hazardous chemicals entering the groundwater from a regulated unit do not exceed the concentration limits for contaminants of concern set forth under § 66264.94 in the uppermost aquifer underlying the waste management area.	Title 22 CCR § 66264.94, except § 66264.94(a)(2) and 94(b)	Relevant and Applicable	Applicable for hazardous waste TSD facilities; potentially relevant and appropriate in site-specific circumstances, such as when the source of the waste is unknown but the waste is similar in composition to listed waste or when waste constituents have released or have the potential to release to groundwater. IRP Sites 18 and 24 are not TSD facilities. However, because the waste in groundwater, in particular TCE, is similar in composition to listed waste, this requirement is determined to be relevant and appropriate.
Safe Drinking Water Act (Federal)			
National primary drinking water standards are health-based standards for public water systems (MCLs).	40 CFR 141.61 (a) and (c)	Relevant and Appropriate	The NCP defines MCLs as relevant and appropriate for groundwater determined to be a current or potential source of drinking water. MCLs are relevant and appropriate for Class II aquifers such as the Irvine Forebay I aquifer. The Santa Ana RWQCB has designated the Irvine Forebay I aquifer for municipal/domestic use (potential drinking water) in addition to other uses. Only the primary standards for organic chemicals (40 CFR 141.61), specifically VOCs, are ARARs for this action. MCLs for inorganics specified in 40 CFR § 141.11 and 40 CFR § 141.62 are not identified as ARARs because inorganics are outside the scope of this action. Furthermore, it has been determined that former MCAS El Toro has not contributed to inorganics contamination in regional groundwater.

Table 3

Chemical-Specific ARARs for Remedial Action at IRP Site 24

STATE			
Cal/EPA, Department of Toxic Substances Control			
Definition of "non-RCRA hazardous waste."	Title 22 CCR §§ 66261.22 (a)(3) and (4), 66261.24(a)(2) to (a)(8), 66261.101, 66261.3(a)(2)(C), or 66261.3(a)(2)(F)	Applicable	Using the state definition for hazardous waste, groundwater extracted from IRP Site 24 wells and soil removed during well construction are determined not to be listed non-RCRA hazardous waste, but will be tested to determine if they meet the criteria for characteristic non-RCRA hazardous waste. If the waste is found to be characteristic non-RCRA hazardous waste, generator requirements are applicable.
State MCL list for drinking water.	Title 22 CCR § 64444	Relevant and Appropriate	Like federal MCLs, state MCLs are tap water standards that are relevant and appropriate for Class II aquifers like Irvine Forebay I. Only the primary standards for organic chemicals (Title 22 CCR § 64444), specifically VOCs, which are more stringent than primary federal standards, are ARARs for this action. MCLs for inorganics specified in Title 22 CCR § 64431 are not identified as ARARs because former MCAS El Toro has not contributed to inorganics contamination in regional groundwater.
State and Regional Water Quality Control Board			
Authorizes the SWRCB and RWQCB to establish, in water quality control plans, beneficial uses and numerical and narrative standards to protect both surface and groundwater quality. Authorizes regional water boards to issue permits for discharges to land, surface, or groundwater that could affect water quality, including NPDES permits, and to take enforcement action to protect water quality.	CWC Div.7, §§ 13241, 13243, 13263(a), 13269, and 13360 (Porter-Cologne Water Quality Act)	Applicable	The DON accepts the substantive provisions of sections 13241, 13243, 13263(a), 13269, and 13360 of the Porter-Cologne Water Quality Act enabling legislation, as implemented through beneficial uses, WQOs, waste discharge requirements, and promulgated policies of the Basin Plan for the Santa Ana Region as ARARs. During the implementation of the remedy, DON will comply with the substantive requirements of the sections cited above.
Describes the water basins in the Santa Ana Region, establishes beneficial uses of groundwater and surface water, establishes WQOs, including narrative and numerical standards, establishes implementation plans to meet WQOs and protect beneficial uses, and incorporates statewide water quality control plans and policies.	Comprehensive Water Quality Control Plan for the Santa Ana Region (Basin Plan) (CWC 13240)	Applicable	Substantive provisions of Chapter 2 through 4 (Plans and Policies, Beneficial Uses, Water Quality Objectives) are applicable. The beneficial uses for the Irvine Forebay I aquifer designated in the Water Quality Control Plan are municipal/domestic use (potential drinking water), agricultural supply, industrial service supply, and industrial process supply.

Table 3
Chemical-Specific ARARs for Remedial Action at IRP Site 24

Incorporated into all regional board basin plans. Designates all groundwater and surface waters of the state as drinking water except where the TDS is greater than 3,000 ppm, the well yield is less than 200 gpd from a single well, the water is a geothermal resource or in a water conveyance facility, or the water cannot reasonably be treated for domestic use using either best management practices or best economically achievable treatment practices.	SWRCB Res. 88-63 (Sources of Drinking Water Policy)	Applicable	Substantive provisions are ARARs. The Irvine Forebay I aquifer has been identified as a source of drinking water.

Notes:

[a] Where MCLs are not available, chemical-specific concentrations used to establish cleanup levels may be based upon the following:
Human health risk-based concentrations (40 CFR § 300.430[e][A][1] and [2])
Ecological risk-based concentrations (40 CFR § 300.430 [e][G])
Practical quantitation limits of contaminants (40 CFR § 300.430[e][A][3]);
Many potential action-specific ARARs contain chemical-specific limitations and are addressed in the action-specific ARAR tables.
[b] Statutes and policies, and their citations, are provided as headings to identify general categories of potential ARARs for the convenience of the reader. Listing the statutes and policies does not indicate that the Department of the Navy accepts the entire statutes or policies as potential ARARs. Specific potential ARARs are addressed in the table below each general heading; only substantive requirements of the specific citations are considered potential ARARs.

§ – section
CWC – California Water Code
Div. – Division
gpd – gallons per day
NPDES – National Pollutant Discharge Elimination System
ppm – parts per million
STLC – soluble threshold limit concentration
SWRCB – State Water Resources Control, California
TCLP – toxicity characteristics leaching procedure
TSD – treatment, storage, and disposal
TTLC – total threshold limit concentration
WQO – water quality objective

Table 4

Location-Specific ARARs for Remedial Action at IRP Site 24

Action/Requirement	Citation	ARAR Determination	Comments
FEDERAL			
Hazardous Waste Control Act*			
Facility within 100-year floodplain must be designed, constructed, operated, and maintained to avoid washout.	Title 22 CCR § 66264.18(b)	Applicable	This requirement is applicable because some groundwater extraction and monitoring wells may be located within the 100-year floodplain.
Executive Order 11988, Protection of Floodplains*			
Actions taken within a floodplain should avoid adverse effects, minimize potential harm, and restore and preserve natural and beneficial values.	40 CFR § 6, Appendix A; excluding §§ 6(a)(2), 6(a)(4), 6(a)(6); 40 CFR § 6.302(b)	Applicable	This requirement is applicable because some groundwater extraction and monitoring wells may be located within the 100-year floodplain.
National Archaeological and Historical Preservation Act*			
Construction within an area where action may cause irreparable harm, loss, or destruction of significant artifacts.	Substantive requirements of 36 CFR § 65, 40 CFR § 6.301(c), 16 USC § 469	Applicable	Construction on previously undisturbed land would require records searches for cultural resources information or an archaeology survey of the area. Further evaluations of compliance with these requirements will be conducted when exact well locations are identified during engineering design work.

Note:
** Statutes and policies, and their citations, are provided as headings to identify general categories of potential ARARs for the convenience of the reader. Listing the statutes and policies does not indicate that the DON accepts the entire statutes or policies as potential ARARs. Specific potential ARARs are addressed in the table below each general heading; only substantive requirements of the specific citations are considered potential ARARs.*

Table 5

Action-Specific ARARs for Remedial Action at IRP Site 24

Action/Requirement	Citation	ARAR Determination	Comments
FEDERAL			
Resource Conservation and Recovery Act, 42 USC § 6901 et seq.			
Onsite waste generation. Persons who generate waste shall determine whether that waste is a hazardous waste.	Title 22 CCR §§ 66262.10(a), 66262.11	Applicable	Applicable for any operation where waste is generated. The determination of whether wastes generated during remedial activities, such as soil cuttings from well installation and treatment residues, are hazardous will be made when the wastes are generated.
Pre-transport Requirements			
Hazardous waste must be packaged in accordance with DOT regulations prior to transport.	Title 22 CCR § 66262.30	Applicable	Applicable for any operation where hazardous waste is generated and transported. The determination of whether wastes generated during remedial activities are hazardous waste will be made when the wastes are generated.
Hazardous waste must be labeled in accordance with DOT regulations prior to transport.	Title 22 CCR § 66262.31	Applicable	Applicable for any operation where hazardous waste is generated and transported. The determination of whether wastes generated during remedial activities are hazardous waste will be made when the wastes are generated.
Provides requirements for marking hazardous waste prior to transport.	Title 22 CCR § 66262.32	Applicable	Applicable for any operation where hazardous waste is generated and transported. The determination of whether wastes generated during remedial activities are hazardous waste will be made when the wastes are generated.
A generator must ensure that the transport vehicle is correctly placarded prior to transport of hazardous waste.	Title 22 CCR § 66262.33	Applicable	Applicable for any operation where hazardous waste is generated and transported. The determination of whether wastes generated during remedial activities are hazardous waste will be made when the wastes are generated.
Establishes requirements for a generator to accumulate hazardous waste on site for 90 days or less without a permit or grant of interim status.	Title 22 CCR § 66262.34	Applicable	Applicable for any operation where hazardous waste is generated and transported. The determination of whether wastes generated during remedial activities are hazardous waste will be made when the wastes are generated.
Monitoring Requirements			
Requirements that contaminants of concern be identified.	Title 22 CCR § 66264.93	Relevant and Appropriate	Relevant and appropriate for IRP Sites 18 and 24. Not applicable because these sites are not regulated units. Table 2-1 identifies

Table 5

Action-Specific ARARs for Remedial Action at IRP Site 24

Action/Requirement	Citation	ARAR Determination	Comments
			chemicals of concern at IRP Sites 18 and 24.
Requires that a groundwater monitoring system be established and provides requirements the system must meet.	Title 22 CCR § 66264.97(b) and (e)(1)-(5).	Relevant and Appropriate	Relevant and appropriate for IRP Sites 18 and 24. Not applicable because these sites are not regulated units. A groundwater monitoring plan will be developed during the remedial design phase.
Requires that the owner or operator of a regulated unit develop a detection monitoring program that will provide reliable indication of a release.	Title 22 CCR § 66264.98	Relevant and Appropriate	Relevant and appropriate for IRP Sites 18 and 24. Not applicable because these sites are not regulated units. A groundwater monitoring plan will be developed during the remedial design phase.
Requires that the owner or operator of a regulated unit develop an evaluation monitoring program that can be used to assess the nature and extent of a release from the unit.	Title 22 CCR § 66264.99	Relevant and Appropriate	Relevant and appropriate for IRP Sites 18 and 24. Not applicable because these sites are not regulated units. A groundwater monitoring plan will be developed during the remedial design phase.
Provides requirements for a corrective action program for a regulated unit.	Title 22 CCR § 66264.100(a), (b),(c),(d),(f), and (g)(1) and (3)	Relevant and Appropriate	Relevant and appropriate for IRP Sites 18 and 24. Not applicable because these sites are not regulated units. A groundwater monitoring plan will be developed during the remedial design phase.
Clean Air Act, 40 USC § 7401 et seq.			
All new sources of air pollution that may result in a net emission increase of any non-attainment air contaminant or any halogenated hydrocarbon are to employ BACT.	SCAQMD Rule 1303	Applicable	Applicable to emissions from the SVE system. Current SCAQMD policy requires BACT only when the net emissions increase exceeds 1 pound per day of any non-attainment air contaminant for a given unit. The SCAQMD BACT guidelines generally require the use of a carbon adsorber to control off-gas. Treatment facilities will be equipped with carbon adsorbers. ARAR is only applicable if SVE is used as an enhancement to the groundwater remedy.
STATE			
State Water Resources Control Board and Regional Water Quality Control Board			
The sampling method and frequency of sampling shall be appropriate for the medium from which the samples are taken.	Title 27 CCR § 20415 (e)(12)(b)	Relevant and Appropriate	A groundwater monitoring plan will be developed during the remedial design phase.
California Civil Code			
Provides conditions under which land-use restrictions will apply to successive owners of land.	CCC 1471	Relevant and Appropriate	Substantive provisions are the following general narrative standard: "to do or refrain from doing some act on his or her own land . . . where (c) Each such act relates to the use of land and each such act is reasonably necessary to protect present or future human health or safety or the environment as a result of the presence of hazardous materials, as

Table 5

Action-Specific ARARs for Remedial Action at IRP Site 24

Action/Requirement	Citation	ARAR Determination	Comments
			defined in Section 25260 of the California Health and Safety Code." This narrative standard would be implemented through incorporation of restrictive covenants in the deed at the time of transfer.
California Health and Safety Code			
Allows DTSC to enter into an agreement with the owner of a hazardous waste facility to restrict present and future land uses.	HSC § 25202.5	Relevant and Appropriate	The substantive provisions of California HSC § 25202.5 are the general narrative standards to restrict "present and future uses of all or part of the land on which the . . . facility . . . is located . . ."
Provides a streamlined process to be used to enter into an agreement to restrict specific use of property.	HSC § 25222.1	Relevant and Appropriate	California HSC § 25222.1 provides the authority for the state to enter into voluntary agreements to establish land-use covenants with the owner of the property. The substantive provision of California HSC § 25222.1 is the general narrative standard: "restricting specified uses of the property."
Provides a process for obtaining a written variance from a land-use restriction.	HSC § 25233(c)	Relevant and Appropriate	California HSC § 25233(c) sets forth substantive criteria for granting variances based upon specified environmental and health criteria.
South Coast Air Quality Management District			
Applies to stationary source, constructed or modified after effective date of requirement that emits carcinogenic air contaminants.	SCAQMD Rule 1401	Applicable	Requires that applicant demonstrate that the cumulative impact of emissions from new or modified source and all other permitted units owned or operated by the applicant within 100 meters of the source are below a maximum individual cancer risk of 10^{-6}. ARAR is only applicable if SVE is used as an enhancement to the groundwater remedy.
Requires that T-BACT be employed for new stationary equipment when the operation of that equipment results in a higher-than-allowable maximum individual cancer risk.	SCAQMD Rule 1401	Applicable	T-BACT is required if maximum individual cancer risk exceeds this limit. Off-gas control for SVE system discharge is to be below the 10^{-6} threshold. ARAR is only applicable if SVE is used as an enhancement to the groundwater remedy.

Notes:
** Statutes and policies, and their citations, are provided as headings to identify general categories of potential ARARs. Specific potential ARARs are addressed in the table below each general heading.*
BACT – Best Available Control Technology
DOT – Department of Transportation, United States
HSC – Health and Safety Code
T-BACT – best available control technology for toxics

Table 6

Screen Intervals for the Initial 35 SGU Extraction Wells

Well No.	Well ID	Northing	Easting	Screen Interval (feet below water table)
1	24_SGU-01	2188606 04	6109365 12	0-110
2	24_SGU-02	2188974 72	6109508 55	0-110
3	24_SGU-03	2189068 87	6109262 88	0-115
4	24_SGU-04	2188753 76	6109129 31	0-110
5	24_SGU-05	2188549 76	6108876 86	0-110
6	24_SGU-06	2189417 43	6109213 80	0-120
7	24_SGU-07	2189284 88	6109113 92	0-120
8	24_SGU-08	2189075 16	6108972 75	0-120
9	24_SGU-09	2188895 66	6108677 90	0-120
10	24_SGU-10	2189252 19	6108881 53	0-120
11	24_SGU-11	2189645 50	6108900 98	0-120
12	24_SGU-12	2189419 27	6108810 95	0-120
13	24_SGU-13	2189219 63	6108649 12	0-120
14	24_SGU-14	2189726 98	6108677 28	0-120
15	24_SGU-15	2189503 64	6108575 41	0-120
16	24_SGU-16	2189850 55	6108501 14	0-120
17	24_SGU-17	2190105 40	6108391 12	0-120
18	24_SGU-18	2190180 93	6108231 53	0-120
19	24_SGU-19	2190364 54	6108066 58	0-120
20	24_SGU-20	2190552 37	6107990 10	0-120
21	24_SGU-21	2190362 53	6107874 86	0-120
22	24_SGU-22	2190596 22	6107805 11	0-120
23	24_SGU-23	2190717 06	6107643 88	0-120
24	24_SGU-24	2190850 19	6107484 44	0-125
25	24_SGU-25	2191059 87	6107233 74	0-125
26	24_SGU-26	2191399 83	6106863 27	65-130
27	24_SGU-27	2191587 79	6106492 38	0-65
28	24_SGU-28	2191710 83	6106172 43	65-130
29	24_SGU-29	2191714 81	6105888 46	0-65
30	24_SGU-30	2191782 47	6105512 11	70-140
31	24_SGU-31	2191224 46	6104523 22	0-70
32	24_SGU-32	2191328 19	6104614 19	75-140
33	24_SGU-33	2191518 87	6104775 87	0-75
34	24_SGU-34	2191708 51	105051 83	70-135
35	24_SGU-35	2191915 69	6105217 06	0-70

Horizontal coordinates reference 0 5 State Plane Coordinate System. NAD 1983. California, Zone 6

Table 7

Control Set Points and Response

Location and Description	Control Set Points and Response
Equalization Tank (T-300A/300B) fail-safe high-high water level switch / alarm	1. Level Switch High-High: set at 8 inches from top of tanks. Alarm activated and power to extraction pumps sequentially turned off. 2. Autodialer activated.
Equalization Tank (T-300A/300B) ultrasonic level sensor with 4 - 20 milliAmp output	1. High-High Level Set Point: set at 12 inches from top of tanks. Shuts down well-field extraction system. 2. High Level Set Point: centrifugal transfer pump turns on. 3. Low Level Set Point: deactivates transfer pump due to low water level in the tank. 4. Low-Low Level Set Point: level alarm low-low activated, power to transfer pump shut down, and autodialer activated.
Ultrasonic level sensor for Tanks T-300A/30B	1. Continuous water level monitoring between high-level and low-level set points to adjust the speed of the variable frequency drive on transfer pump. Set points to be determined prior to plant start up.
120 volt signal from modified IDP for plant shutdown	1. Well field submersible pumps shut down sequentially due to request from modified IDP. 2. Autodialer activated.
Submersible extraction well pumps (P-1 through P-35 and multiphase extraction wells)	3. Local and remote hand-off-auto switches for each pump.
Pressure transducer for measuring water levels in the wells	4. Set to deactivate the submersible pump motors if the water level above the pump is 5 feet or less.
Discharge flowmeter / totalizer / indicator / transmitter /alarm. Flowmeter measures flow rate of water on discharge side of transfer pumps.	1. Used to monitor discharge flow rate to protect transfer pumps. 2. Low flow alarm and autodialer activated if flow rate drops to a predetermined low set-point.
Discharge pressure transmitter / indicator / alarm. Measures in-line pressure at discharge side of transfer pumps	1. Monitor / record the transfer pump discharge pressure.

Note:

[a] *Shutdown of IRP Site 24 SGU well field and conveyance system automatically results in alert signal sent to modified IDP PLC.*

Table 8

Wells To Be Used For Groundwater Remedy Enhancement Using SVE

Well ID	Well Diameter (inches)	Total Depth (feet)	Screen Interval (feet)	Evaluation Rationale/Remarks
24EX3	6	186	105-180	Located near hotspot at building 296. To be used to: monitor groundwater levels; evaluate drawdown in the SGU as a result of pumping; and, enhance removal of residual contaminant mass in the dewatered zone using SVE.
24EX3OB1	4	156	105-150	Located near hotspot at building 296. To be used to: monitor groundwater levels; evaluate drawdown in the SGU as a result of pumping; and, enhance removal of residual contaminant mass in the dewatered zone using SVE.
24EX3OB2	4	156	105-150	Located near hotspot at building 296. To be used to: monitor groundwater levels; evaluate drawdown in the SGU as a result of pumping; and, enhance removal of residual contaminant mass in the dewatered zone using SVE.
24EX4	6	195	104-190	Located near hotspot at building 296. To be used to: monitor groundwater levels; evaluate drawdown in the SGU as a result of pumping; and, enhance removal of residual contaminant mass in the dewatered zone using SVE.
24EX4OB1	4	156	105-150	Located near hotspot at building 296. To be used to: monitor groundwater levels; evaluate drawdown in the SGU as a result of pumping; and, enhance removal of residual contaminant mass in the dewatered zone using SVE.
24EX4OB2	4	156	105.7-150.7	Located near hotspot at building 296. To be used to: monitor groundwater levels; evaluate drawdown in the SGU as a result of pumping; and, enhance removal of residual contaminant mass in the dewatered zone using SVE.
24EX5OB2	4	155	105-150	Located near hotspot at building 297. To be used to: monitor groundwater levels; evaluate drawdown in the SGU as a result of pumping; and, enhance removal of residual contaminant mass in the dewatered zone using SVE.
24EX6	6	178	103-173	Located near hotspot at building 297. To be used to: monitor groundwater levels; evaluate drawdown in the SGU as a result of pumping; and, enhance removal of residual contaminant mass in the dewatered zone using SVE.
24EX6OB1	4	156	106-151	Located near hotspot at building 297. To be used to: monitor groundwater levels; evaluate drawdown in the SGU as a result of pumping; and, enhance removal of residual contaminant mass in the dewatered zone using SVE.
24EX6OB2	4	156	105-150	Located near hotspot at building 297. To be used to: monitor groundwater levels; evaluate drawdown in the SGU as a result of pumping; and, enhance removal of residual contaminant mass in the dewatered zone using SVE.

Table 9

Extraction and Monitoring Wells for the SGU Remedy

Well ID	Diameter (inches)	Total Depth (ft bgs)	Screen Interval (ft bgs)	Model Layer	Evaluation Rationale/Remarks
On-Station Monitoring Wells					
24EX10	6	165	115-160	1	Located within the 50 µg/L TCE isoconcentration contour adjacent to southwestern boundary of the station. Will provide assessment of VOC concentrations and hydraulic containment.
24EX11	6	220	135-180	1,2	Located within the 50 µg/L TCE isoconcentration contour adjacent to southwestern boundary of the station. Will provide assessment of VOC concentrations and hydraulic containment.
24EX14	6	123	115–185	1,2	Located adjacent to the 50 µg/L TCE isoconcentration contour adjacent to southwestern boundary of the station. Will provide assessment of VOC concentrations and hydraulic containment.
18_PS2	4	133	103–133	1	Located near the northern edge of the plume at the station boundary. Will provide assessment of VOC concentrations and hydraulic containment.
18_DW135	4	135	115–135	1	Located at the northern edge of the TCE plume. Will provide assessment of VOC concentrations.
24MW05A/B	3	168	100–135 140-170	1	Located near the northeastern edge of the 50 µg/L TCE isoconcentration contour down gradient of source area. Will provide assessment of VOC concentrations and hydraulic containment.
24MW07	4	190	120-200	1,2	Located along plume margin northwest of source area. Will provide assessment of VOCs and hydraulic containment.
24IN03	6	169	90.5–160	1	Located in source area. Will provide assessment of VOC concentrations and hydraulic containment.
24EX6OB1	4	156	106–151	1	Located within 500 µg/L TCE isoconcentration contour in source area. Will provide assessment of VOC concentrations and hydraulic containment. Will serve as SVE well for remedy enhancement.
07_DBMW43A	4	146	101–141	1	Located on the eastern boundary of the plume. Will provide assessment of VOC concentrations.
24EX3OB1	4	155	105–150	1	Located within 500 µg/L TCE isoconcentration contour in source area. Will provide assessment of VOC concentrations and hydraulic containment. Will serve as SVE well for remedy enhancement.
08_UGMW29A	4	105	75–100	1	Located near the southern boundary of the plume. Will provide assessment of VOC concentrations.
18_PS3A	4	110	70–105	1	Located near the southern boundary of the plume and adjacent to the southwestern boundary of the station Will provide assessment of VOC concentrations.
18_PS8	4	145	125–145	1	Located cross gradient from source area. Will provide assessment of VOC concentrations and hydraulic containment.
08_DGMW73	4	135	90–130	1	Located near the southern edge of the VOC plume. Will provide assessment of VOC concentrations.
18_PS7	4	126	106–126	1	Located adjacent to the southwestern boundary of the VOC plume. Will provide assessment of VOC concentrations.

Table 9
Extraction and Monitoring Wells for the SGU Remedy

Well ID	Diameter (inches)	Total Depth (ft bgs)	Screen Interval (ft bgs)	Model Layer	Evaluation Rationale/Remarks
07_DGMW91	4	155	110–150	1	Located near the southwestern edge of the 50 µg/L TCE isoconcentration contour near source area. Will provide assessment of VOC concentrations and hydraulic containment.
18_PS5	4	126	106–126	1	Located adjacent to the southwestern boundary of the VOC plume. Will provide assessment of VOC concentrations.
21_UGMW37	4	135	89–130	1	Located near the southwestern edge of the 50 µg/L TCE isoconcentration contour near source area. Will provide assessment of VOC concentrations and hydraulic containment.
24MW06	4	190	170-190	2	Located southwest of source area. Will provide assessment of VOC concentrations and hydraulic containment.
24EX9	6	200	120-200	1,2	Located within source area. Will provide assessment of VOC concentrations and hydraulic containment.
10_DGMW77	4	175	150–170	1	Located within source area. Will provide assessment of VOC concentrations and hydraulic containment.
18_PS1	4	122	102–122	1	Located adjacent to the southwestern boundary of the VOC plume. Will provide assessment of VOC concentrations.
12_UGMW31	4	150	105–145	1	Located southwest of the 50 µg/L TCE isoconcentration contour near source area. Will provide assessment of VOC concentrations and hydraulic containment.
18_BGMW101A	4	103	68–98	1	Located near the southwestern boundary of the station. Will provide assessment of VOC concentrations and hydraulic containment.
24EX13A/B/C	6	270	110–160 170-210 230-270	1 2 2	Located immediately down gradient of source area. Will provide assessment of VOC concentrations and hydraulic containment.
24EX12A/B/C	6	260	115–160 165-210 220-260	1 2 2	Located between source area and station boundary. Will provide assessment of VOC concentrations and hydraulic containment.
24NEW4	4	153.5	108-148	1	Located within source area. Will provide assessment of VOC concentrations and hydraulic containment.
24NEW7	4	163.5	118-158	1	Located outside of plume boundary north of source area. Will provide assessment of VOC concentrations and hydraulic containment.
24NEW8	4	167.5	122-162	1	Located outside of plume boundary north of source area. Will provide assessment of VOC concentrations and hydraulic containment.
22_DBMW47	4	161	116-156	1	Located adjacent to source area. Will provide assessment of VOC concentrations and hydraulic containment.

Table 9
Extraction and Monitoring Wells for the SGU Remedy

Well ID	Diameter (inches)	Total Depth (ft bgs)	Screen Interval (ft bgs)	Model Layer	Evaluation Rationale/Remarks
07_DBMW70	4	170	125-165	1	Located outside of northeastern plume boundary. Will provide assessment of VOC concentrations.
09_DGMW75	5	159	114-154	1	Located within 500 μg/L TCE isoconcentration contour within source area. Will provide assessment of VOC concentrations and hydraulic containment. Will serve as SVE well for remedy enhancement.
18_PS6	4	151	130-150	1	Located within 500 μg/L TCE isoconcentration contour within source area. Will provide assessment of VOC concentrations and hydraulic containment.
15_DBMW51	4	170	125-165	1	Located outside of northern plume boundary. Will provide assessment of VOC concentrations.
24EX2OB	2	207	107-205	1,2	Located outside of northern plume boundary. Will provide assessment of VOC concentrations.
18_BGMW103	4	158	118-158	1,2	Located outside of northern plume boundary. Will provide assessment of VOC concentrations.
18_BGMW03	6	490	124-164 222-242 280-300 370-390	1,2,3,4	Located within the VOC source area. Will provide assessment of hydraulic containment and VOC concentrations in the SGU and upper portion of the principal aquifer.
SGU Extraction Wells					
24_SGU01 – 24_SGU39	—	—	—	1,2	The SGU extraction wells will be sampled and monitored as part of the regular O&M of the extraction and conveyance system. Extracted VOC concentrations will be used to optimize system performance. Extraction wells shutdown due to low concentrations at system startup or due to remedy progression will be utilized as monitoring wells for measurement of VOC concentrations and groundwater elevations.
Proposed Multi-level Monitoring Wells					
24MW08	TBD	240	110-120 160-170 210-220 260-270 310-320 360-370	1,2,3,4	24MW08 will include multiple short screens for high resolution measurement of VOC concentrations and groundwater elevations immediately down gradient of the VOC source area. The screens will be placed in the SGU and the upper portion of the principal aquifer. Actual screen interval depths are subject to change based on observations during well drilling.
24MW09	TBD	245	100-110 140-150 185-195 230-240	1,2	24MW09 will include multiple short screens for high resolution measurement of VOC concentrations and groundwater elevations between the source area and the station boundary.

Table 9
Extraction and Monitoring Wells for the SGU Remedy

Well ID	Diameter (inches)	Total Depth (ft bgs)	Screen Interval (ft bgs)	Model Layer	Evaluation Rationale/Remarks
24MW10	TBD	245	100-110 140-150 185-195 230-240	1,2	24MW10 will include multiple short screens for high resolution measurement of VOC concentrations and groundwater elevations between the source area and the station boundary.
24MW11	TBD	240	95-105 130-140 175-185 225-235	1,2	24MW11 will include multiple short screens for high resolution measurement of VOC concentrations and groundwater elevations between the source area and the station boundary.
24MW12	TBD	225	75-85 120-130 160-170 210-220	1,2	24MW12 will include multiple short screens for high resolution measurement of VOC concentrations and groundwater elevations between the source area and the station boundary.
24MW13	TBD	225	70-80 110-120 160-170 210-220	1,2	24MW13 will include multiple short screens for high resolution measurement of VOC concentrations and groundwater elevations at the station boundary.
24MW14	TBD	225	70-80 110-120 160-170 210-220	1,2	24MW14 will include multiple short screens for high resolution measurement of VOC concentrations and groundwater elevations at the station boundary.
24MW15	TBD	225	70-80 110-120 160-170 210-220	1,2	24MW15 will include multiple short screens for high resolution measurement of VOC concentrations and groundwater elevations at the station boundary.

Table 9
Extraction and Monitoring Wells for the SGU Remedy

Well ID	Diameter (inches)	Total Depth (ft bgs)	Screen Interval (ft bgs)	Model Layer	Evaluation Rationale/Remarks
24MW16	TBD	225	65-75 110-120 150-160 200-210 250-260 300-310	1,2	24MW16 will include multiple short screens for high resolution measurement of VOC concentrations and groundwater elevations off station.
24MW17	TBD	225	65-75 110-120 150-160 200-210 250-260 300-310	1,2	24MW17 will include multiple short screens for high resolution measurement of VOC concentrations and groundwater elevations off station.
Off-Station Monitoring Wells					
18_IDP2	4	340	155-195 300-340	1,2 4	Located near northern plume periphery adjacent to station boundary. Will provide assessment of VOC concentrations.
18_MCAS01	4.5	582	60-70 150-160 210-220 270-280 330-340 450-460 540-550	1-5	Located within principal aquifer plume up gradient of ET-1. Will provide assessment of VOC concentrations and hydraulic capture.

Table 9
Extraction and Monitoring Wells for the SGU Remedy

Well ID	Diameter (inches)	Total Depth (ft bgs)	Screen Interval (ft bgs)	Model Layer	Evaluation Rationale/Remarks
18_MCAS02	4.5	647	40-50 130-140 200-210 370-380 420-430 490-500 550-560 620-630	1-5	Located within the transition zone between the down gradient edge of the SGU plume, and up gradient edge of the principal aquifer plume. Will provide assessment of VOC concentrations and hydraulic capture.
18_MCAS03	4.5	531	80-90 160-170 220-230 340-350 420-430 490-500	1-5	Located at station boundary. Will provide assessment of VOC concentrations and hydraulic capture.
18_MCAS04	4	240	181-238	2	Located south of principal aquifer plume. Will provide assessment of VOC concentrations and hydraulic capture.
18_IDP4	4	410	125-410	1-4	Located southeast of principal aquifer plume. Will provide assessment of VOC concentrations and hydraulic capture.
18_MCAS06	4	285	167–222	2	Located south of principal aquifer plume. Will provide assessment of VOC concentrations and hydraulic capture.
18_MCAS07	4.5	1152	90-100 190-200 350-360 440-450 510-520 800-810 910-920 980-990 1080-1090	1-5	Located between ET-1 and ET-2. Will provide assessment of VOC concentrations and hydraulic capture.

Table 9
Extraction and Monitoring Wells for the SGU Remedy

Well ID	Diameter (inches)	Total Depth (ft bgs)	Screen Interval (ft bgs)	Model Layer	Evaluation Rationale/Remarks
18_MCAS08	4	435	390–410	4,5	Located southwest of the principal aquifer plume. Will provide assessment of VOC concentrations and hydraulic capture.
18_MCAS09	4	450	372–445	4,5	Located northwest of the principal aquifer plume. Will provide assessment of VOC concentrations and hydraulic capture.
18_MCAS10	4	400	355-375	4,5	Located north of the principal aquifer plume. Will provide assessment of VOC concentrations and hydraulic capture.
18_BGMP06	4	455	105-115 168-178 295-305 380-390 445-455	1-5	Located northeast of the principal aquifer plume. Will provide assessment of VOC concentrations and hydraulic capture.
18_BGMP10	4	1015	218-228 429-439 563-573 752-762 887-897 1001-1011	2-6	Located northwest of the principal aquifer plume. Will provide assessment of VOC concentrations and hydraulic capture.
18BGMW19	4.5	470	98-138 150-170 257-277 400-420 448-468	1-5	Located north of SGU plume boundary. Will provide assessment of VOC concentrations.
18_NLAKE	14	910	370–890	4,5,6	Located in principal aquifer near down gradient edge of VOC plume. Will provide assessment of VOC concentrations and hydraulic capture.
IRWD-78	18	690	240–680	3,4,5,6	Located down gradient of the leading edge of the aquifer plume. Will provide assessment of VOC concentrations and hydraulic capture.

Notes:
Monitoring frequencies, and durations will be determined based on system performance.

APPENDIX A

Appendix A

Evaluation Concentration Levels (ECL) for Groundwater

(all units as micrograms/liter)

Analytes	ECL for Point of Connection of DoN's Shallow Groundwater Unit (SGU) Conveyance Pipeline (a)	ECL for CCMI central VOC Treatment Plant Intake
General Chemistry (mg/L)		
ALKALINITY AS CACO3	302	290
Ca	287	169
Cl	393	264
HCO3	363	
HCO3 (AS CACO3)	302	
K	5	4
Na	188	195
NO3	181	67
NO3(N)	30.2	8
NO3/NO2(N)	33.5	
SO4	479	376
SILICA	60	59
TDS	2147	1450
pH	N/A	>5.9 & <9.1
Metals and Cyanide (µg/L)		
Ag	100	
Al	50	40
As	2.1	10
Ba	200 (b)	68
Cd	5	4
CN	200	
Co	9.2	
Cr (total)	50	9
Cu	50 (b)	70
Fe	300	240
Hg	2	0.6
Mg	91.2	
Mn	79.3	110

Appendix A

Evaluation Concentration Levels (ECL) for Groundwater
(all units as micrograms/liter)

Analytes	ECL for Point of Connection of DoN's Shallow Groundwater Unit (SGU) Conveyance Pipeline (a)	ECL for CCMI central VOC Treatment Plant Intake
Ni	233	
Pb	50	8
Sb	27.1	
Se	33.2	19
V	25.7	
Zn	200 (b)	
Radionuclides (pCi/L)		
GROSS BETA	50	11.5
GROSS ALPHA	15	6.3
Volatile Organic Compounds (µg/L)		
1,1,1-TCA	200	15.4
1,1,2-TCA	5	
1,1,2-TRICHOLORO-1,2,2-TRIFLUOROETHANE	0.2	
1,1-DCA	5	
1,1-DCE	6	
1,2-DCA	1.8	0.14
1,2-DCE (TOTAL)	10	
1,2-DCE, Cis-	6	
BENZENE	4.5	0.35
CARBON DISULFIDE	1.8	
CCl4	3.6	0.28
CHLOROFORM	80	6.4
ETHYLBENZENE	680	52.5
METHYL CHLORIDE	2.8	
METHYLENE CHLORIDE	5	
PCE	5.2	0.5
PHENOL	17.7	
TCE	237	22

Appendix A

Evaluation Concentration Levels (ECL) for Groundwater

(all units as micrograms/liter)

Analytes	ECL for Point of Connection of DoN's Shallow Groundwater Unit (SGU) Conveyance Pipeline (a)	ECL for CCMI central VOC Treatment Plant Intake
TOLUENE	150	11.6
XYLENE (TOTAL)	1750	
Other Organic Constituents (µg/L)		
2-HEXANONE	3.5	
2-PENTANONE, 4-HYDROXY-4-METHYL	16.5	
BENZYL BUTYL PHTHALATE	100	
BIS(2-ETHYLHEXYL)PHTHALATE	17.7	
DI-N-OCTYL PHTHALATE	7.0	
STYRENE	100	
TPH DIESEL	513	
TPHVOA	132	
PERCHLORATE	23 (c)	1.8
METHYL TERTIARY BUTYL ETHER (MTBE)	5	

Notes:

(a) Highest concentration of either:

1. Source of Maximum Credible Values (MCVs): Table C-1g of OU-1 IAFS Addendum dated August 9, 1998. Inorganic Data: Average values are unchanged from monitoring well values, maximum credible data are 1.59 times average value. VOC and SVOC Data: Average values are based on monitoring well data for each VOC and SVOC times the ratio of the average (highest or lowest, depending on which column) TCE concentration at the extraction well (See Table C-1e of the OU-1 IAFS Addendum) divided by the average TCE value for the monitoring wells. Maximum credible data are calculated similarly using peak (90% confidence level) TCE data; or
2. Most stringent primary, secondary, or proposed Maximum Contaminant Level (MCL), Federal or State

(b) Revised due to OCWD/IRWD requirement (June 24, 1998).

(c) Highest value detected in SGU to date.

INSTALLATION RESTORATION PROGRAM (IRP)

REMEDIAL DESIGN SHALLOW GROUNDWATER UNIT REMEDY

CONSTRUCTION CONTRACT NO. N68711-01-D-6010

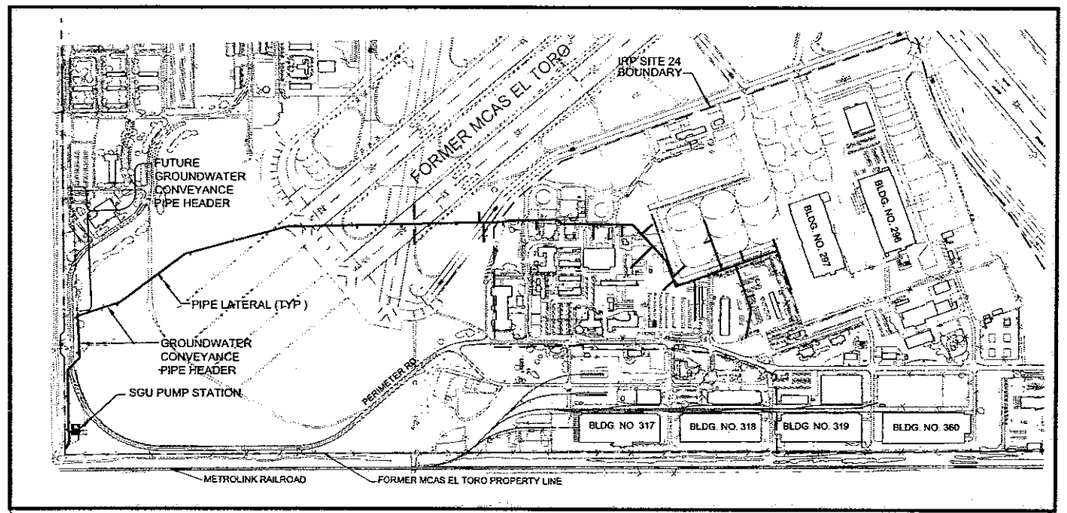

SITE LOCATION MAP

0 250' 500
SCALE: 1" = 500' (APPROXIMATE)

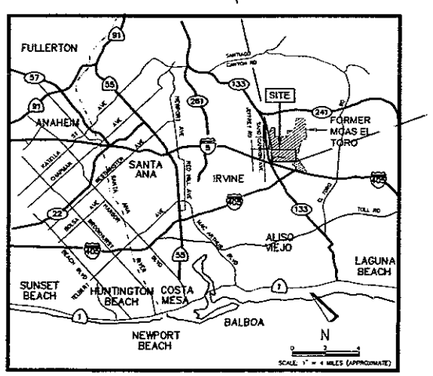

SITE VICINITY MAP

DRAWING INDEX

NAVFAC DRAWING NO.	DISCIPLINE SHEET NO.	SHEET TITLE
	T-1	TITLE SHEET, SITE LOCATION MAP AND DRAWING INDEX
	T-2	ABBREVIATIONS, GENERAL NOTES, LEGEND AND SYMBOLS
	C-1	EXISTING SITE CONDITIONS AND KEY PLAN
	C-2	PLAN AND PROFILE STA. 2+23 TO STA. 11+64.50, LINE A
	C-3	PLAN AND PROFILE, FUTURE GROUNDWATER CONVEYANCE PIPE HEADER LINE A-1
	C-4	PLAN AND PROFILE STA. 1+00 TO STA. 15+00, LINE B
	C-5	PLAN AND PROFILE STA. 15+00 TO STA. 30+00 LINE B
	C-6	PLAN AND PROFILE STA. 30+00 TO STA. 45+50, LINE B
	C-7	PLAN AND PROFILE STA. 45+50 TO STA. 57+64.27, END LINE B
	C-8	PROFILES, LATERAL LINES C THRU K AND PROFILE O
	C-9	PLAN AND PROFILES, LINES L, M AND N
	C-10	PLAN AND PROFILE, LINE P AND PROFILE LINE Q
	C-11	SITE PLAN AND DETAILS – SGU PUMP STATION
	C-12	FENCE DETAILS
	C-13	CIVIL DETAILS
	E-1.0	ELECTRICAL SYMBOLS, NOTES, AND SITE LOCATIONS
	E-1.1	ELECTRICAL SINGLE LINE DIAGRAM SERVICE #1
	E-1.2	ELECTRICAL SINGLE LINE DIAGRAM SERVICE #2
	E-1.3	ELECTRICAL DETAILS
	E-1.4	ELECTRICAL DETAILS
	E-1.5	ELECTRICAL DETAILS
	E-2.0	ELECTRICAL SITE PLAN TRANSFORMER #1 AREA
	E-2.1	ELECTRICAL SITE PLAN TRANSFORMER #1 AREA
	E-2.2	ELECTRICAL SITE PLAN TRANSFORMER #1 AREA
	E-2.3	ELECTRICAL SITE PLAN TRANSFORMER #1 AREA
	E-2.4	ELECTRICAL SITE PLAN TRANSFORMER #1 AREA
	E-2.5	ELECTRICAL SITE PLAN TRANSFORMER #1 AREA
	E-2.6	ELECTRICAL SITE PLAN TRANSFORMER #1 AREA
	E-2.7	ELECTRICAL SITE PLAN TRANSFORMER #1 AREA
	E-2.8	ELECTRICAL SITE PLAN TRANSFORMER #1 AREA
	E-2.9	ELECTRICAL SITE PLAN TRANSFORMER #1 AREA
	E-2.10	ELECTRICAL SITE PLAN TRANSFORMER #1 AREA
	E-2.11	ELECTRICAL SITE PLAN TRANSFORMER #1 AREA
	E-2.12	ELECTRICAL SITE PLAN TRANSFORMER #1 AREA
	E-3.0	ELECTRICAL SITE PLAN TRANSFORMER #2 AREA
	E-3.1	ELECTRICAL SITE PLAN TRANSFORMER #2 AREA
	E-3.2	ELECTRICAL SITE PLAN TRANSFORMER #2 AREA
	E-3.3	ELECTRICAL SITE PLAN TRANSFORMER #2 AREA
	E-3.4	ELECTRICAL SITE PLAN TRANSFORMER #2 AREA
	E-3.5	ELECTRICAL SITE PLAN TRANSFORMER #2 AREA
	E-3.6	ELECTRICAL SITE PLAN TRANSFORMER #2 AREA
	E-3.7	ELECTRICAL SITE PLAN TRANSFORMER #2 AREA
	E-4.0	ELECTRICAL SITE PLAN TRANSFORMER #2 AREA
	E-4.1	ELECTRICAL SITE PLAN TRANSFORMER #2 AREA
	E-4.2	ELECTRICAL SITE PLAN TRANSFORMER #2 AREA
	M-1	PROPOSED GROUNDWATER EXTRACTION WELLS AND WELL VAULT DETAILS
	M-2	MECHANICAL DETAILS
	M-3	MECHANICAL DETAILS
	M-4	MECHANICAL DETAILS
	M-5	MECHANICAL DETAILS
	P-1	PROCESS AND INSTRUMENTATION LEGEND
	P-2	PROCESS AND INSTRUMENTATION DIAGRAM
	P-3	ENCLOSURE PANEL AND LAYOUT FOR WELL VAULTS
	S-1	STRUCTURAL DETAILS

NOT FOR CONSTRUCTION

Underground Service Alert
Call: TOLL FREE
1-800
422-4133
TWO WORKING DAYS BEFORE YOU DIG

SOURCE:
EARTH TECH, INC. 60% DESIGN SUBMITTAL, REMEDIAL DESIGN SHALLOW GROUNDWATER UNIT REMEDY, IRP SITE 24, DECEMBER 2003, NAVAL FACILITIES ENGINEERING COMMAND CONTRACT N6272-94-D-0048.

NO.	DATE	APPR.	REVISION	NO.	DATE	APPR.	REVISION
A	1/04		90% DESIGN SUBMITTAL				
B	10/04		100% DESIGN				

DEPARTMENT OF THE NAVY
SOUTHWEST DIVISION
San Diego California

WESTON SOLUTIONS
Walnut Creek California

CHECKED	DATE	CLIENT APPROVALS	DATE
DES. ENG.			
PROJ. ENG.			
PROJ. MGR.			
APPROVED			
APPROVED		ISSUED FOR	DATE

TITLE SHEET, SITE LOCATION MAP AND DRAWING INDEX
REMEDIAL DESIGN SHALLOW GROUNDWATER UNIT REMEDY

DRAWN D.C.H.	DATE JANUARY 2004	DWG. NO. T-1	REV. NO. B
SCALE AS NOTED	W.O. NO. 12954002004001020	SHT. – OF –	

GENERAL NOTES

1. TOPOGRAPHIC SITE SURVEY INFORMATION IS BASED ON SURVEY BY HIRSCH & COMPANY (AUGUST 2003). THE TOPOGRAPHIC MAPS ARE PROVIDED IN NAD 83 SPCS ZONE 6 FOR HORIZONTAL CONTROL AND NAVD 88 FOR VERTICAL DATUM. ALIGNMENT SITE SURVEY INFORMATION IS BASED ON SURVEY BY HIRSCH & COMPANY (NOVEMER & DECEMBER 2003). CONTRACTOR SHALL VERIFY ALL SITE SURVEY INFORMATION IN FIELD
2. PROJECT DRAWINGS SHALL BE USED IN CONJUNCTION WITH PROJECT SPECIFICATIONS. THE CONTRACTOR SHALL BE RESPONSIBLE FOR COORDINATING THE WORK AMONG THE VARIOUS TRADES AS NECESSARY TO AVOID CONFLICTS AND TO ENSURE THE INSTALLATION OF ALL WORK WITHIN THE AVAILABLE SPACE.
3. CONTRACTOR SHALL BE RESPONSIBLE FOR SAFETY OF PEOPLE AND PROPERTY AT THE WORK AREA. ALL CONSTRUCTION PERSONNEL SHALL BE TRAINED AS REQUIRED BY PERTINENT REGULATIONS.
4. PRIOR TO THE START OF FIELDWORK, THE CONTRACTOR SHALL OBTAIN ALL NECESSARY PERMITS AND APPROVALS IN ACCORDANCE WITH FEDERAL, STATE AND LOCAL LAW RULES AND REGULATIONS.
5. THE LOCATIONS OF EXISTING UNDERGROUND UTILITIES ARE APPROXIMATE AND OBTAINED FROM A SEARCH OF EXISTING RECORDS, AND PERFORMANCE OF GEOPHYSICAL SURVEYS AND EXPLORATORY TRENCHING. ACTUAL FIELD CONDITIONS AND LOCATIONS MAY VARY FROM THOSE SHOWN ON PLANS AND PROFILES. SHOULD THE CONTRACTOR ENCOUNTER PREVIOUSLY UNKNOWN UNDERGROUND UTILITIES OR DAMAGE ANY UNDERGROUND UTILITIES, SUCH INCIDENTS SHALL BE REPORTED TO THE RPM/ROICC IMMEDIATELY PRIOR TO PROCEEDING WITH RESTORATION. REPAIR TO DAMAGED UTILITIES SHALL BE AT CONTRACTOR'S EXPENSE AND AT NO ADDITIONAL COST TO THE NAVY.
6. THE CONTRACTOR SHALL KEEP COPIES OF THE "APPROVED FOR CONSTRUCTION" PLANS AND SPECIFICATIONS AT THE SITE AT ALL TIMES. CONSTRUCTION WORK THAT DEVIATES FROM THE APPROVED PLANS SHALL RECEIVE RPM/ROICC PRIOR APPROVAL AND BE PROPERLY DOCUMENTED AND NOTED "AS-BUILT" ON THE PLANS.
7. QUESTIONS REGARDING INTERPRETATION OF THE PROJECT PLANS AND SPECIFICATIONS, SHALL BE ADDRESSED BY MEMORANDUM TO THE RPM/ROICC FOR CLARIFICATION. CONTRACTOR SHALL OBTAIN CLARIFICATIONS AND WRITTEN APPROVALS PRIOR TO IMPLEMENTATION.
8. LOOSE EXCAVATED MATERIALS SHALL NOT BE PLACED OR STORED IN WATERWAYS OR STORM DRAIN CHANNELS.
9. WASTE GENERATED DURING CONSTRUCTION SHALL BE REMOVED AND DISPOSED OFF-SITE BY THE CONTRACTOR OR AS DIRECTED BY THE RPM/ROICC AT THE CONTRACTOR'S EXPENSE
10. ALL DISTURBED GROUND SURFACE SHALL BE GRADED TO FACILITATE DRAINAGE AND PREVENT PONDING.
11. CONSTRUCTION SITES SHALL BE MAINTAINED IN SUCH A CONDITION THAT STORM WATER DOES NOT CARRY WASTES OR POLLUTANTS OFF THE SITE.
12. THE BASIS OF ELEVATION FOR VERTICAL CONTROL IS NAVD 88 PER ORANGE COUNTY SURVEY POINTS: (A) AGUA-CHINON-1, ELEVATION 493.10, MARKED ORANGE COUNTY SURVEYOR 3.75" ALUMINUM CAP; (B) AGUA-CHINON-2, ELEVATION 520.43, MARKED ORANGE COUNTY SURVEYOR 3 75" ALUMINUM CAP; (C) 3E-96-78 ELEVATION 434 90 MARKED ORANGE COUNTY SURVEYOR 3 75" ALUMINUM CAP.
13. EROSION CONTROL DURING CONSTRUCTION SHALL BE IN ACCORDANCE WITH THE NATIONAL POLLUTANT DISCHARGE ELIMINATION SYSTEM (NPDES) BEST MANAGEMENT PRACTICES (BMP).
14. TRENCHING/CONSTRUCTION SHALL BE CONDUCTED IN ACCORDANCE WITH CAL/OSHA SAFETY REQUIREMENTS. WHILE THE EXCAVATION IS OPEN, THE UNDERGROUND UTILITIES SHALL BE PROTECTED SUPPORTED ABANDONED OR REMOVED AS DIRECTED BY THE RPM/ROICC
15. BEFORE COMMENCING ANY EXCAVATION, THE CONTRACTOR SHALL NOTIFY ALL UNDERGROUND UTILITY OWNERS (CALL DIG ALERT) A MINIMUM OF TWO WORKING DAYS BEFORE STARTING THE WORK.
16. CONTRACTOR SHALL ASSIGN A QUALIFIED PERSON ON THE SITE AT ALL TIMES TO INSPECT THE EXCAVATIONS AND ADJACENT AREAS TO ENSURE THE SAFETY OF PROPERTY AND CONSTRUCTION PERSONNEL.
17. ALL BURIED PIPE AND FITTINGS SHALL BE IRON PIPE SIZE (IPS), STANDARD DIMENSION RATIO (SDR) 11, HIGH-DENSITY POLYETHYLENE (HDPE) 3408 UNLESS OTHERWISE NOTED. ALL FUSION WELDS SHALL BE BY BUTT FUSION OR ELECTROFUSION

LIST OF ABBREVIATIONS

A	AMPERE
AASHTO	AMERICAN ASSOCIATION OF HIGHWAY AND TRANSPORTATION OFFICIALS
AC	ALTERNATING CURRENT/ASPHALT CONCRETE/ ASBESTOS CEMENT
AG.	AGGREGATE
ANSI	AMERICAN NATIONAL STANDARDS INSTITUTE
APPROX.	APPROXIMATE
ASTM	AMERICAN SOCIETY FOR TESTING AND MATERIALS
AVE	AVENUE
AWG	AMERICAN WIRE GAUGE
BLDG.	BUILDING
BMP	BEST MANAGEMENT PRACTICES
BOT	BOTTOM
BR MGR.	BRANCH MANAGER
CB	CATCH BASIN
CH ENG.	CHIEF ENGINEER
CIP	CAST IRON PIPE
CL	CENTER LINE
CLR	CLEAR
CHK	CHECKED
CMP	CORRUGATED METAL PIPE
CO	CLEAN OUT
CONC	CONCRETE
CONSTR.	CONSTRUCTION
CONT	CONTINUATION
CONTR.	CONTRACT
COM.	COMMUNICATIONS
CS	CROSS SECTION
CTR.	CENTER
△	DEFLECTION ANGLE
°	DEGREE
DC	DIRECT CURRENT
DES.	DESIGNED
DIA., Ø	DIAMETER
DIR.	DIRECTOR
DR	DRAWN
E	EAST
EA.	EACH
EL	ELEVATION
ELECT	ELECTRICAL
EMH	ELECTRICAL MANHOLE
EW	EACH WAY
EX.	EXISTING
(F)	FEMALE
FG	FINISHED GRADE
FLEX	FLEXIBLE
FL	FLOW LINE
FM	FLOW METER
FPT	FEMALE PIPE THREAD
FS	FINISHED SURFACE
FT	FOOT
G	GAS
GB	GRADE BREAK
GND.	GROUND
GPM	GALLONS PER MINUTE
GRC	GALVANIZED RIGID CONDUIT
H	HORIZONTAL
H-20	AASHTO HIGHWAY-20 LOADING
HDPE	HIGH DENSITY POLYETHYLENE
HORZ. ANG. PT.	HORIZONTAL ANGLE POINT
HP	HORSEPOWER
ID	INSIDE DIAMETER
IDENT.	IDENTIFICATION
IDP	IRVINE DESALTER PROJECT
IN. "	INCH
INV	INVERT
IPS	IRON PIPE SIZE
IRP	INSTALLATION RESTORATION PROGRAM
KV	KILO VOLT
KVA	KILO VOLT AMPERE
LTR	LETTER
MAX	MAXIMUM
MCAS	MARINE CORPS AIR STATION
µg/L	MICROGRAMS PER LITER
M	MOTOR
(M)	MALE
MCC	MOTOR CONTROL CENTER
MH	MANHOLE
MIN.	MINIMUM
N	NORTH
NAD83	NORTH AMERICAN DATUM 1983
NAVD88	NORTH AMERICAN VERTICAL DATUM 1988
NAVFAC	NAVAL FACILITIES
NEMA	NATIONAL ELECTRICAL MANUFACTURERS ASSOCIATION
NPDES	NATIONAL POLLUTANT DISCHARGE ELIMINATION SYSTEM
NPT	NATIONAL PIPE TAPERED THREAD
NST	NATIONAL PIPE STRAIGHT THREAD
NTS	NOT TO SCALE
NO. #	NUMBER
OC	ON CENTER
OD	OUTSIDE DIAMETER
OZ./SQ. YD	OUNCE PER SQUARE YARD
%	PERCENT
Ø	PHASE
P	POLE
PC	POINT OF CURVATURE
PCC	PORTLAND CEMENT CONCRETE
PI	POINT OF INTERSECTION
PROP.	PROPOSED
PSI	POUNDS PER SQUARE INCH
PT	POINT OF TANGENT
PVC	POLYVINYL CHLORIDE
R	RADIUS
RCP	REINFORCED CONCRETE PIPE
REBAR	REINFORCEMENT BAR
ROICC	RESIDENT OFFICER IN CHARGE OF CONSTRUCTION
RPM	REMEDIAL PROJECT MANAGER
S	SLOPE SOUTH
SCH.	SCHEDULE
SD	STORM DRAIN
SDR	STANDARD DIMENSION RATIO
SGU	SHALLOW GROUNDWATER UNIT
SPCS	STATE PLANE COORDINATE SYSTEM
SS	SANITARY SEWER/STAINLESS STEEL
ST	STREET
STA.	STATION
TBD	TO BE DETERMINED
TOC	TOP OF CURB / TOP OF CONCRETE
TPER	THERMOPLASTIC ELASTOMERIC RUBBER
TRANS	TRANSITION
TYP	TYPICAL
UBC	UNIFORM BUILDING CODE
V	VOLT
VERT.	VERTICAL
W	WATER / WIRE
W/	WITH
WHM	WATT HOUR METER
WWM	WELDED WIRE MESH
XFMR	TRANSFORMER

LEGEND AND SYMBOLS

EXISTING

- ELECTRICAL LINE
- ELECTRICAL MAHNOLE
- ELECTRICAL BOX
- ELECTRICAL TRANSFORMER
- GAS LINE
- GAS METER
- GAS VALVE
- GROUNDWATER MONITORING WELL
- FENCE LINE
- FIRE HYDRANT
- GROUND ELEVATION INDEX CONTOUR (10 FT INTERVAL)
- GROUND ELEVATION INTERMEDIATE CONTOUR (2 FT INTERVAL)
- IRP SITE 24 BOUNDARY
- TRICHLOROETHYLENE ISOCONCENTRATION CONTOUR (µg/L)
- LIGHT POLE
- PIEZOMETER
- POWER POLE
- RAILROAD LINE
- SANITARY SEWER LINE
- SANITARY SEWER CLEANOUT
- SANITARY SEWER MANHOLE
- STORM DRAIN LINE
- STORM DRAIN CATCH BASIN
- STORM DRAIN MANHOLE
- TREE
- VAULT
- WATER LINE
- WATER LINE MAHNOLE
- WATER METER
- PROPERTY LINE OF FORMER MCAS EL TORO

PROPOSED

- FENCE
- 24_SGU-02 — SITE 24 SGU EXTRACTION WELL 02
- SGU GROUNDWATER CONVEYANCE PIPE HEADER
- 1+00 — SGU GROUNDWATER CONVEYANCE PIPE STATIONING

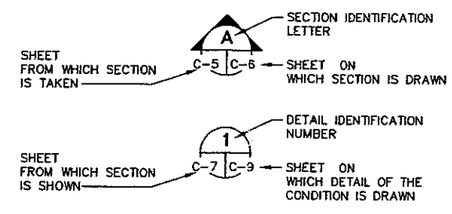

NOT FOR CONSTRUCTION

SOURCE:
EARTH TECH INC. 60% DESIGN SUBMITTAL, REMEDIAL DESIGN SHALLOW GROUNDWATER UNIT REMEDY, IRP SITE 24, DECEMBER 2003, NAVAL FACILITIES ENGINEERING COMMAND CONTRACT N6272-94-D-0048

Underground Service Alert
Call: TOLL FREE
1-800 422-4133
TWO WORKING DAYS BEFORE YOU DIG

NO.	DATE	APPR.	REVISION	NO.	DATE	APPR.	REVISION
A	1/04		90% DESIGN SUBMITTAL				
B	10/04		100% DESIGN				

DEPARTMENT OF THE NAVY
SOUTHWEST DIVISION
San Diego California

WESTON SOLUTIONS
Walnut Creek California

CHECKED	DATE	CLIENT APPROVALS	DATE
DES. ENG.			
PROJ. ENG.			
PROJ. MGR.			
APPROVED			
APPROVED		ISSUED FOR	DATE

ABBREVIATIONS, GENERAL NOTES LEGEND AND SYMBOLS
REMEDIAL DESIGN SHALLOW GROUNDWATER UNIT REMEDY

DRAWN	DATE	DWG. NO.	REV. NO.
D.C.H.	JANUARY 2004	T-2	B
SCALE	W.O. NO.	SHT. – OF –	
NONE	12954002004001020		

INSTALLATION RESTORATION PROGRAM (IRP)

REMEDIAL DESIGN SHALLOW GROUNDWATER UNIT REMEDY

CONSTRUCTION CONTRACT NO. N68711-01-D-6010

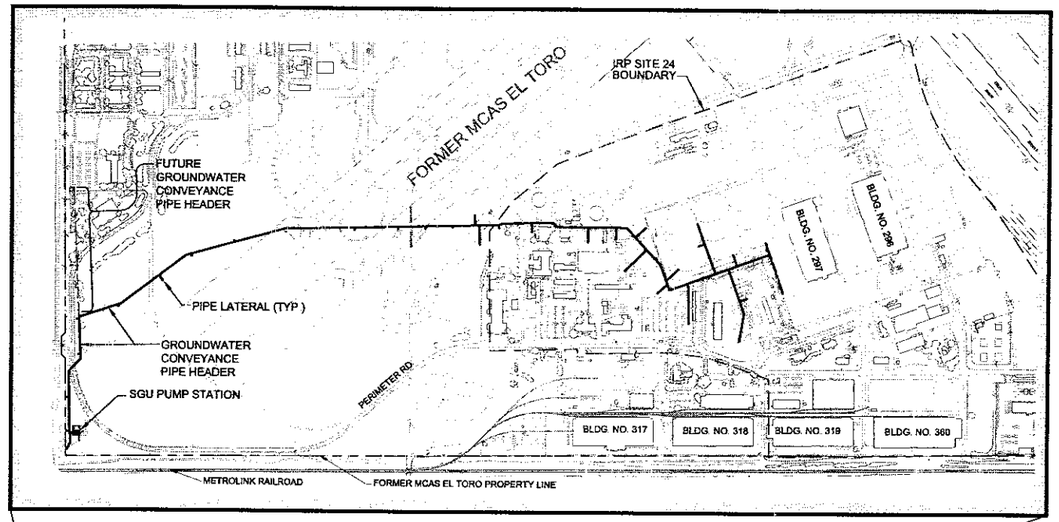

SITE LOCATION MAP

SCALE: 1" = 500' (APPROXIMATE)

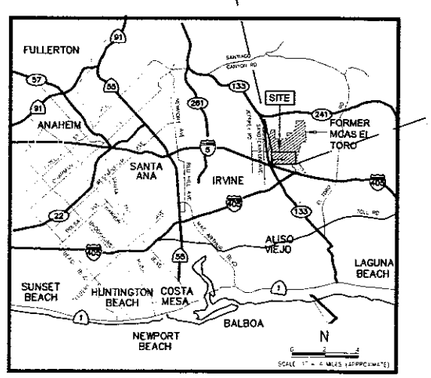

SITE VICINITY MAP

DRAWING INDEX

NAVFAC DRAWING NO.	DISCIPLINE SHEET NO.	SHEET TITLE
	T-1	TITLE SHEET, SITE LOCATION MAP AND DRAWING INDEX
	T-2	ABBREVIATIONS, GENERAL NOTES, LEGEND AND SYMBOLS
	C-1	EXISTING SITE CONDITIONS AND KEY PLAN
	C-2	PLAN AND PROFILE STA. 2+23 TO STA. 11+64.50, LINE A
	C-3	PLAN AND PROFILE, FUTURE GROUNDWATER CONVEYANCE PIPE HEADER, LINE A-1
	C-4	PLAN AND PROFILE STA. 1+00 TO STA. 15+00, LINE B
	C-5	PLAN AND PROFILE STA. 15+00 TO STA. 30+00, LINE B
	C-6	PLAN AND PROFILE STA. 30+00 TO STA. 45+50, LINE B
	C-7	PLAN AND PROFILE STA. 45+50 TO STA. 57+64.27, END LINE B
	C-8	PROFILES, LATERAL LINES C THRU K AND PROFILE O
	C-9	PLAN AND PROFILES LINES L, M AND N
	C-10	PLAN AND PROFILE, LINE P AND PROFILE LINE Q
	C-11	SITE PLAN AND DETAILS – SGU PUMP STATION
	C-12	FENCE DETAILS
	C-13	CIVIL DETAILS
	E-1.0	ELECTRICAL SYMBOLS, NOTES, AND SITE LOCATIONS
	E-1.1	ELECTRICAL SINGLE LINE DIAGRAM SERVICE #1
	E-1.2	ELECTRICAL SINGLE LINE DIAGRAM SERVICE #2
	E-1.3	ELECTRICAL DETAILS
	E-1.4	ELECTRICAL DETAILS
	E-1.5	ELECTRICAL DETAILS
	E-2.0	ELECTRICAL SITE PLAN TRANSFORMER #1 AREA
	E-2.1	ELECTRICAL SITE PLAN TRANSFORMER #1 AREA
	E-2.2	ELECTRICAL SITE PLAN TRANSFORMER #1 AREA
	E-2.3	ELECTRICAL SITE PLAN TRANSFORMER #1 AREA
	E-2.4	ELECTRICAL SITE PLAN TRANSFORMER #1 AREA
	E-2.5	ELECTRICAL SITE PLAN TRANSFORMER #1 AREA
	E-2.6	ELECTRICAL SITE PLAN TRANSFORMER #1 AREA
	E-2.7	ELECTRICAL SITE PLAN TRANSFORMER #1 AREA
	E-2.8	ELECTRICAL SITE PLAN TRANSFORMER #1 AREA
	E-2.9	ELECTRICAL SITE PLAN TRANSFORMER #1 AREA
	E-2.10	ELECTRICAL SITE PLAN TRANSFORMER #1 AREA
	E-2.11	ELECTRICAL SITE PLAN TRANSFORMER #1 AREA
	E-2.12	ELECTRICAL SITE PLAN TRANSFORMER #1 AREA
	E-3.0	ELECTRICAL SITE PLAN TRANSFORMER #2 AREA
	E-3.1	ELECTRICAL SITE PLAN TRANSFORMER #2 AREA
	E-3.2	ELECTRICAL SITE PLAN TRANSFORMER #2 AREA
	E-3.3	ELECTRICAL SITE PLAN TRANSFORMER #2 AREA
	E-3.4	ELECTRICAL SITE PLAN TRANSFORMER #2 AREA
	E-3.5	ELECTRICAL SITE PLAN TRANSFORMER #2 AREA
	E-3.6	ELECTRICAL SITE PLAN TRANSFORMER #2 AREA
	E-3.7	ELECTRICAL SITE PLAN TRANSFORMER #2 AREA
	E-4.0	ELECTRICAL SITE PLAN TRANSFORMER #2 AREA
	E-4.1	ELECTRICAL SITE PLAN TRANSFORMER #2 AREA
	E-4.2	ELECTRICAL SITE PLAN TRANSFORMER #2 AREA
	M-1	PROPOSED GROUNDWATER EXTRACTION WELLS AND WELL VAULT DETAILS
	M-2	MECHANICAL DETAILS
	M-3	MECHANICAL DETAILS
	M-4	MECHANICAL DETAILS
	M-5	MECHANICAL DETAILS
	P-1	PROCESS AND INSTRUMENTATION LEGEND
	P-2	PROCESS AND INSTRUMENTATION DIAGRAM
	P-3	ENCLOSURE PANEL AND LAYOUT FOR WELL VAULTS
	S-1	STRUCTURAL DETAILS

REGISTERED PROFESSIONAL ENGINEER
REES KESHISHIAN JR.
95071
6/30/06
CIVIL
STATE OF CALIFORNIA

SOURCE:
EARTH TECH, INC. 60% DESIGN SUBMITTAL, REMEDIAL DESIGN SHALLOW GROUNDWATER UNIT REMEDY, IRP SITE 24, DECEMBER 2003, NAVAL FACILITIES ENGINEERING COMMAND CONTRACT N6272-94-D-0048.

Underground Service Alert
Call: TOLL FREE 1-800 422-4133
TWO WORKING DAYS BEFORE YOU DIG

NO	DATE	APPR	REVISION
A	1/04		60% DESIGN SUBMITTAL
B	10/04		100% DESIGN
C	2/05		FINAL 100% DESIGN ISSUED FOR CONSTRUCTION

DEPARTMENT OF THE NAVY
SOUTHWEST DIVISION
San Diego California

WESTON SOLUTIONS

CHECKED	DATE	CLIENT APPROVALS	DATE
DES. ENG.			
PROJ. ENG.			
PROJ. MGR.			
APPROVED			
APPROVED		ISSUED FOR	DATE

TITLE SHEET, SITE LOCATION MAP AND DRAWING INDEX
REMEDIAL DESIGN SHALLOW GROUNDWATER UNIT REMEDY

DRAWN	DATE	DWG. NO.	REV. NO.
D.C.H.	JANUARY 2004	T-1	C
SCALE: AS NOTED	N.O. NO. 1285400200400 1020	SHT. – OF –	

GENERAL NOTES

1. TOPOGRAPHIC SITE SURVEY INFORMATION IS BASED ON SURVEY BY HIRSCH & COMPANY (AUGUST 2003). THE TOPOGRAPHIC MAPS ARE PROVIDED IN NAD 83 SPCS ZONE 6 FOR HORIZONTAL CONTROL AND NAVD 88 FOR VERTICAL DATUM. ALIGNMENT SITE SURVEY INFORMATION IS BASED ON SURVEY BY HIRSCH & COMPANY (NOVEMER & DECEMBER 2003). CONTRACTOR SHALL VERIFY ALL SITE SURVEY INFORMATION IN FIELD.
2. PROJECT DRAWINGS SHALL BE USED IN CONJUNCTION WITH PROJECT SPECIFICATIONS. THE CONTRACTOR SHALL BE RESPONSIBLE FOR COORDINATING THE WORK AMONG THE VARIOUS TRADES AS NECESSARY TO AVOID CONFLICTS AND TO ENSURE THE INSTALLATION OF ALL WORK WITHIN THE AVAILABLE SPACE.
3. CONTRACTOR SHALL BE RESPONSIBLE FOR SAFETY OF PEOPLE AND PROPERTY AT THE WORK AREA. ALL CONSTRUCTION PERSONNEL SHALL BE TRAINED AS REQUIRED BY PERTINENT REGULATIONS.
4. PRIOR TO THE START OF FIELDWORK, THE CONTRACTOR SHALL OBTAIN ALL NECESSARY PERMITS AND APPROVALS IN ACCORDANCE WITH FEDERAL, STATE AND LOCAL LAW, RULES, AND REGULATIONS.
5. THE LOCATIONS OF EXISTING UNDERGROUND UTILITIES ARE APPROXIMATE AND OBTAINED FROM A SEARCH OF EXISTING RECORDS, AND PERFORMANCE OF GEOPHYSICAL SURVEYS AND EXPLORATORY TRENCHING. ACTUAL FIELD CONDITIONS AND LOCATIONS MAY VARY FROM THOSE SHOWN ON PLANS AND PROFILES. SHOULD THE CONTRACTOR ENCOUNTER PREVIOUSLY UNKNOWN UNDERGROUND UTILITIES OR DAMAGE ANY UNDERGROUND UTILITIES, SUCH INCIDENTS SHALL BE REPORTED TO THE RPM/ROICC IMMEDIATELY PRIOR TO PROCEEDING WITH RESTORATION. REPAIR TO DAMAGED UTILITIES SHALL BE AT CONTRACTOR'S EXPENSE AND AT NO ADDITIONAL COST TO THE NAVY.
6. THE CONTRACTOR SHALL KEEP COPIES OF THE "APPROVED FOR CONSTRUCTION" PLANS AND SPECIFICATIONS AT THE SITE AT ALL TIMES. CONSTRUCTION WORK THAT DEVIATES FROM THE APPROVED PLANS SHALL RECEIVE RPM/ROICC PRIOR APPROVAL AND BE PROPERLY DOCUMENTED AND NOTED "AS-BUILT" ON THE PLANS.
7. QUESTIONS REGARDING INTERPRETATION OF THE PROJECT PLANS AND SPECIFICATIONS, SHALL BE ADDRESSED BY MEMORANDUM TO THE RPM/ROICC FOR CLARIFICATION. CONTRACTOR SHALL OBTAIN CLARIFICATIONS AND WRITTEN APPROVALS PRIOR TO IMPLEMENTATION.
8. LOOSE EXCAVATED MATERIALS SHALL NOT BE PLACED OR STORED IN WATERWAYS OR STORM DRAIN CHANNELS.
9. WASTE GENERATED DURING CONSTRUCTION SHALL BE REMOVED AND DISPOSED OFF-SITE BY THE CONTRACTOR OR AS DIRECTED BY THE RPM/ROICC AT THE CONTRACTOR'S EXPENSE.
10. ALL DISTURBED GROUND SURFACE SHALL BE GRADED TO FACILITATE DRAINAGE AND PREVENT PONDING.
11. CONSTRUCTION SITES SHALL BE MAINTAINED IN SUCH A CONDITION THAT STORM WATER DOES NOT CARRY WASTES OR POLLUTANTS OFF THE SITE.
12. THE BASIS OF ELEVATION FOR VERTICAL CONTROL IS NAVD 88 PER ORANGE COUNTY SURVEY POINTS: (A) AGUA-CHINON-1, ELEVATION 493.10, MARKED ORANGE COUNTY SURVEYOR 3.75" ALUMINUM CAP; (B) AGUA-CHINON-2, ELEVATION 520.43, MARKED ORANGE COUNTY SURVEYOR 3.75" ALUMINUM CAP; (C) 3E-98-78 ELEVATION 434.90 MARKED ORANGE COUNTY SURVEYOR 3.75" ALUMINUM CAP.
13. EROSION CONTROL DURING CONSTRUCTION SHALL BE IN ACCORDANCE WITH THE NATIONAL POLLUTANT DISCHARGE ELIMINATION SYSTEM (NPDES) BEST MANAGEMENT PRACTICES (BMP).
14. TRENCHING/CONSTRUCTION SHALL BE CONDUCTED IN ACCORDANCE WITH CAL/OSHA SAFETY REQUIREMENTS. WHILE THE EXCAVATION IS OPEN, THE UNDERGROUND UTILITIES SHALL BE PROTECTED, SUPPORTED, ABANDONED, OR REMOVED AS DIRECTED BY THE RPM/ROICC.
15. BEFORE COMMENCING ANY EXCAVATION, THE CONTRACTOR SHALL NOTIFY ALL UNDERGROUND UTILITY OWNERS (CALL DIG ALERT) A MINIMUM OF TWO WORKING DAYS BEFORE STARTING THE WORK.
16. CONTRACTOR SHALL ASSIGN A QUALIFIED PERSON ON THE SITE AT ALL TIMES TO INSPECT THE EXCAVATIONS AND ADJACENT AREAS TO ENSURE THE SAFETY OF PROPERTY AND CONSTRUCTION PERSONNEL.
17. ALL BURIED PIPE AND FITTINGS SHALL BE IRON PIPE SIZE (IPS), STANDARD DIMENSION RATIO (SDR) 11, HIGH-DENSITY POLYETHYLENE (HDPE) 3408 UNLESS OTHERWISE NOTED. ALL FUSION WELDS SHALL BE BY BUTT FUSION OR ELECTROFUSION.

LIST OF ABBREVIATIONS

A	AMPERE
AASHTO	AMERICAN ASSOCIATION OF HIGHWAY AND TRANSPORTATION OFFICIALS
AC	ALTERNATING CURRENT/ASPHALT CONCRETE/ ASBESTOS CEMENT
AG.	AGGREGATE
ANSI	AMERICAN NATIONAL STANDARDS INSTITUTE
APPROX.	APPROXIMATE
ASTM	AMERICAN SOCIETY FOR TESTING AND MATERIALS
AVE	AVENUE
AWG	AMERICAN WIRE GAUGE
BLDG.	BUILDING
BMP	BEST MANAGEMENT PRACTICES
BOT	BOTTOM
BR MGR.	BRANCH MANAGER
CB	CATCH BASIN
CH ENG.	CHIEF ENGINEER
CIP	CAST IRON PIPE
CL	CENTER LINE
CLR.	CLEAR
CHK	CHECKED
CMP	CORRUGATED METAL PIPE
CO	CLEAN OUT
CONC.	CONCRETE
CONSTR.	CONSTRUCTION
CONT	CONTINUATION
CONTR.	CONTRACT
COM.	COMMUNICATIONS
CS	CROSS SECTION
CTR	CENTER
△	DEFLECTION ANGLE
°	DEGREE
DC	DIRECT CURRENT
DES.	DESIGNED
DIA. Ø	DIAMETER
DIR	DIRECTOR
DR.	DRAWN
E	EAST
EA.	EACH
EL	ELEVATION
ELECT	ELECTRICAL
EMH	ELECTRICAL MANHOLE
EW	EACH WAY
EX.	EXISTING
(F)	FEMALE
FG	FINISHED GRADE
FLEX.	FLEXIBLE
FL	FLOW LINE
FM	FLOW METER
FPT	FEMALE PIPE THREAD
FS	FINISHED SURFACE
FT	FOOT
G	GAS
GB	GRADE BREAK
GND.	GROUND
GPM	GALLONS PER MINUTE
GRC	GALVANIZED RIGID CONDUIT
H	HORIZONTAL
H-20	AASHTO HIGHWAY-20 LOADING
HDPE	HIGH DENSITY POLYETHYLENE
HORZ. ANG. PT	HORIZONTAL ANGLE POINT
HP	HORSEPOWER
ID	INSIDE DIAMETER
IDENT	IDENTIFICATION
IDP	IRVINE DESALTER PROJECT
IN. "	INCH
INV	INVERT
IPS	IRON PIPE SIZE
IRP	INSTALLATION RESTORATION PROGRAM
KV	KILO VOLT
KVA	KILO VOLT AMPERE
LTR.	LETTER
MAX	MAXIMUM
MCAS	MARINE CORPS AIR STATION
µg/L	MICROGRAMS PER LITER
M	MOTOR
(M)	MALE
MCC	MOTOR CONTROL CENTER
MH	MANHOLE
MIN.	MINIMUM
N	NORTH
NAD83	NORTH AMERICAN DATUM 1983
NAVD88	NORTH AMERICAN VERTICAL DATUM, 1988
NAVFAC	NAVAL FACILITIES
NEMA	NATIONAL ELECTRICAL MANUFACTURERS ASSOCIATION
NPDES	NATIONAL POLLUTANT DISCHARGE ELIMINATION SYSTEM
NPT	NATIONAL PIPE TAPERED THREAD
NST	NATIONAL PIPE STRAIGHT THREAD
NTS	NOT TO SCALE
NO. #	NUMBER
OC	ON CENTER
OD	OUTSIDE DIAMETER
OZ./SQ. YD.	OUNCE PER SQUARE YARD
%	PERCENT
Ø	PHASE
P	POLE
PC	POINT OF CURVATURE
PCC	PORTLAND CEMENT CONCRETE
PI	POINT OF INTERSECTION
PROP	PROPOSED
PSI	POUNDS PER SQUARE INCH
PT	POINT OF TANGENT
PVC	POLYVINYL CHLORIDE
R	RADIUS
RCP	REINFORCED CONCRETE PIPE
REBAR	REINFORCEMENT BAR
ROICC	RESIDENT OFFICER IN CHARGE OF CONSTRUCTION
RPM	REMEDIAL PROJECT MANAGER
S	SLOPE, SOUTH
SCH.	SCHEDULE
SD	STORM DRAIN
SDR	STANDARD DIMENSION RATIO
SGU	SHALLOW GROUNDWATER UNIT
SPCS	STATE PLANE COORDINATE SYSTEM
SS	SANITARY SEWER/STAINLESS STEEL
ST	STREET
STA.	STATION
TBD	TO BE DETERMINED
TOC	TOP OF CURB / TOP OF CONCRETE
TPER	THERMOPLASTIC ELASTOMERIC RUBBER
TRANS	TRANSITION
TYP.	TYPICAL
UBC	UNIFORM BUILDING CODE
V	VOLT
VERT	VERTICAL
W	WATER / WIRE
W/	WITH
WHM	WATT HOUR METER
WWM	WELDED WIRE MESH
XFMR	TRANSFORMER

LEGEND AND SYMBOLS

EXISTING

- ELECTRICAL LINE
- ELECTRICAL MAHNOLE
- ELECTRICAL BOX
- ELECTRICAL TRANSFORMER
- GAS LINE
- GAS METER
- GAS VALVE
- GROUNDWATER MONITORING WELL
- FENCE LINE
- FIRE HYDRANT
- GROUND ELEVATION INDEX CONTOUR (10 FT INTERVAL)
- GROUND ELEVATION INTERMEDIATE CONTOUR (2 FT INTERVAL)
- IRP SITE 24 BOUNDARY
- TRICHLOROETHYLENE ISOCONCENTRATION CONTOUR (µg/L)
- LIGHT POLE
- PIEZOMETER
- POWER POLE
- RAILROAD LINE
- SANITARY SEWER LINE
- SANITARY SEWER CLEANOUT
- SANITARY SEWER MANHOLE
- STORM DRAIN LINE
- STORM DRAIN CATCH BASIN
- STORM DRAIN MANHOLE
- TREE
- VAULT
- WATER LINE
- WATER LINE MAHNOLE
- WATER METER
- PROPERTY LINE OF FORMER MCAS EL TORO

PROPOSED

- FENCE
- 24_SGU-02 — SITE 24 SGU EXTRACTION WELL 02
- SGU GROUNDWATER CONVEYANCE PIPE HEADER
- 1+00 — SGU GROUNDWATER CONVEYANCE PIPE STATIONING

A — SECTION IDENTIFICATION LETTER
C-5 — SHEET FROM WHICH SECTION IS TAKEN
C-6 — SHEET ON WHICH SECTION IS DRAWN

1 — DETAIL IDENTIFICATION NUMBER
C-7 — SHEET FROM WHICH SECTION IS SHOWN
C-9 — SHEET ON WHICH DETAIL OF THE CONDITION IS DRAWN

REGISTERED PROFESSIONAL ENGINEER — BERG KESSLER JR. — 35971 — 6/30/06 — CIVIL — STATE OF CALIFORNIA

SOURCE:
EARTH TECH, INC. 60% DESIGN SUBMITTAL, REMEDIAL DESIGN SHALLOW GROUNDWATER UNIT REMEDY, IRP SITE 24, DECEMBER 2003, NAVAL FACILITIES ENGINEERING COMMAND CONTRACT N6272-94-D-0048.

Underground Service Alert
Call: TOLL FREE 1-800 422-4133
TWO WORKING DAYS BEFORE YOU DIG.

NO.	DATE	APPR.	REVISION
A	1/04		90% DESIGN SUBMITTAL
B	10/04		100% DESIGN
C	2/05		FINAL 100% DESIGN/ISSUED FOR CONSTRUCTION

DEPARTMENT OF THE NAVY
SOUTHWEST DIVISION
San Diego California

WESTON SOLUTIONS

CHECKED	SIGN	DATE
DES. ENG.		
PROJ. ENG.		
FIELD MGR.		
APPROVED		
APPROVED		

SIGN APPROVALS	DATE
ISSUED FOR	DATE

ABBREVIATIONS, GENERAL NOTES LEGEND AND SYMBOLS

REMEDIAL DESIGN SHALLOW GROUNDWATER UNIT REMEDY

DRAWN	DATE	DWG NO.	REV. NO.
D.C.H.	JANUARY 2004	T-2	C
SCALE: NONE	CONTRACT NO.: 12954002004001020	SHT. — OF —	

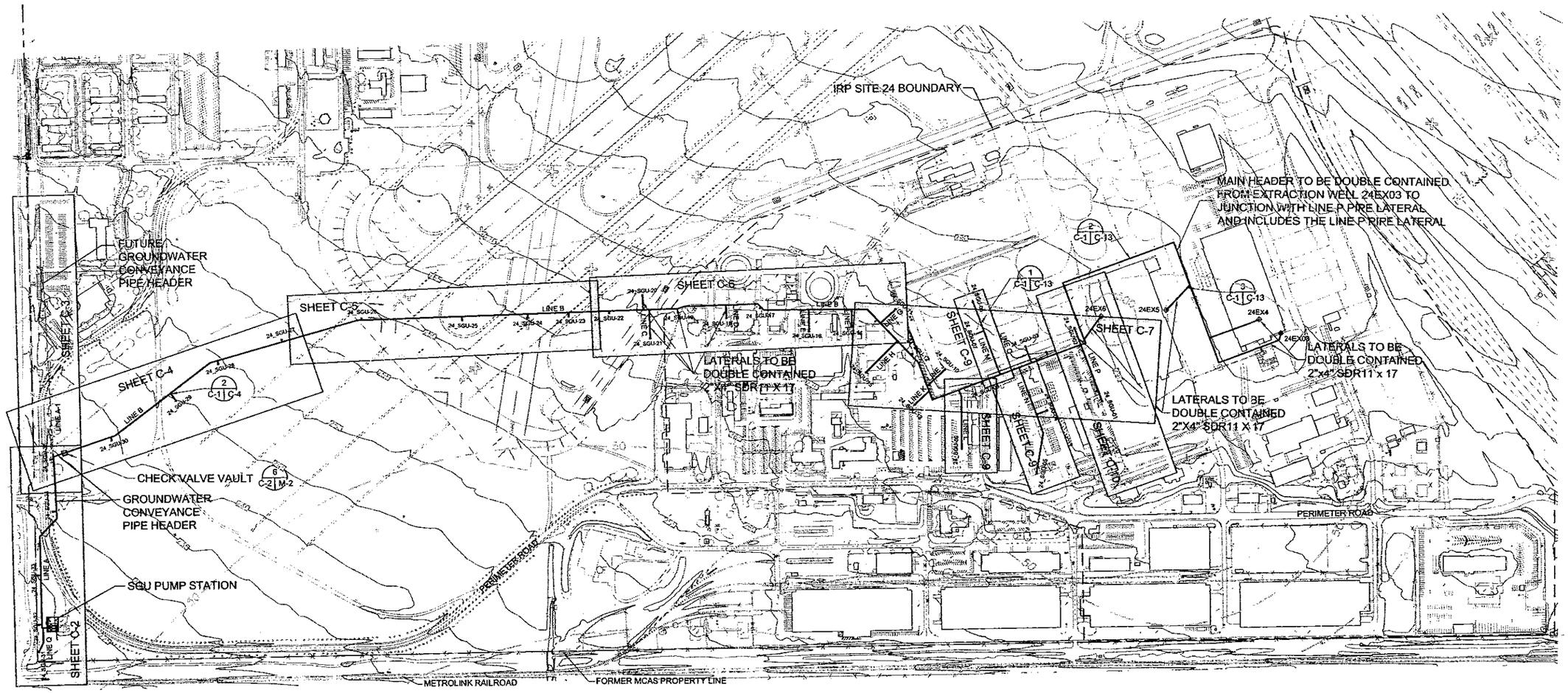

NOTES:

1. SEE SHEET T-2 FOR ABBREVIATIONS, GENERAL NOTES, LEGEND AND SYMBOLS.
2. LOCATIONS OF WELLS 24EX03, 24EX4, 24EX5, 24EX6 ARE APPROXIMATE.
3. DOUBLE CONTAINMENT END TERMINATIONS WITH LOW POINT DRAINS TO BE INSTALLED WHERE INDICATED ON DRAWINGS C-6 AND C-10.
4. SEE SHEET C-13 FOR TYPICAL TRENCH CROSS SECTIONS AT LATERAL LINES AND MULTIPHASE LINES.
5. ALL LATERAL LINES TO HAVE A CLEANOUT PORT INSTALLED NEAR INTERSECTION OF LATERAL LINE WITH MAIN LINE. SEE SHEET M-4 FOR LATERAL LINE CLEANOUT PORT DETAIL.

SCALE: 1" = 250'

NOT FOR CONSTRUCTION

SOURCE:

EARTH TECH INC. 60% DESIGN SUBMITTAL, REMEDIAL DESIGN SHALLOW GROUNDWATER UNIT REMEDY, IRP SITE 24, DECEMBER 2003, NAVAL FACILITIES ENGINEERING COMMAND CONTRACT N6272-94-D-0048.

Underground Service Alert
Call: TOLL FREE
1-800
422-4133
TWO WORKING DAYS BEFORE YOU DIG

NO.	DATE	APPR.	REVISION	NO.	DATE	APPR.	REVISION
A	1/04		90% DESIGN SUBMITTAL				
B	10/04		100% DESIGN				

DEPARTMENT OF THE NAVY
SOUTHWEST DIVISION
San Diego California

WESTON SOLUTIONS
Walnut Creek California

CHECKED	DATE	CLIENT APPROVALS	DATE
DES. ENG.			
PROJ. ENG.			
PROJ. MGR.			
APPROVED			
APPROVED		ISSUED FOR	DATE

EXISTING SITE CONDITIONS AND KEY PLAN

REMEDIAL DESIGN SHALLOW GROUNDWATER UNIT REMEDY

DRAWN	DATE	DWG. NO.	REV. NO.
D.C.H.	JANUARY 2004	C-1	B
SCALE 1"=250'	W.O. NO. 12954002004001020	SHT. — OF —	

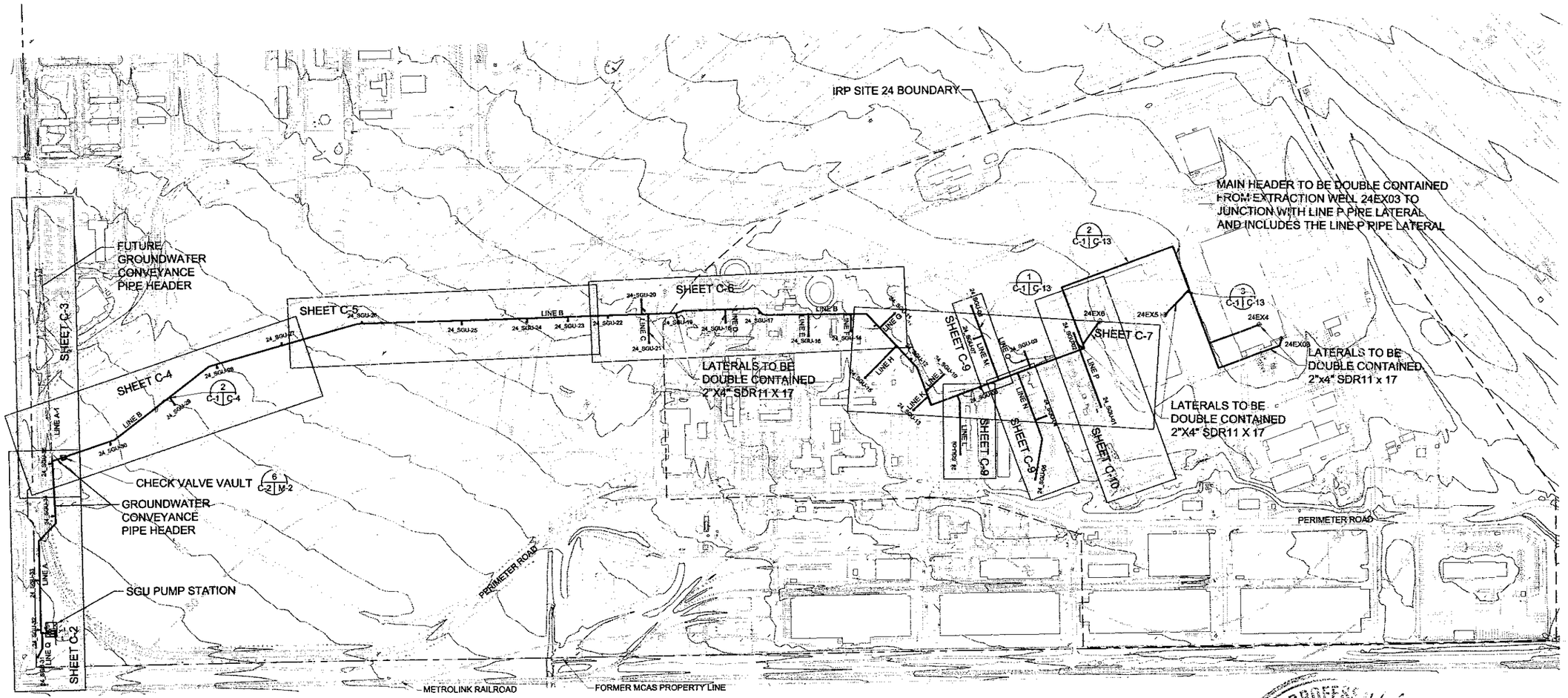

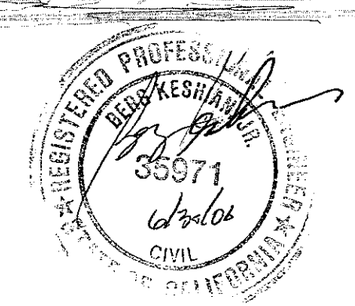

NOTES:

1. SEE SHEET T-2 FOR ABBREVIATIONS, GENERAL NOTES LEGEND AND SYMBOLS.
2. LOCATIONS OF WELLS 24EX03, 24EX4, 24EX5, 24EX6 ARE APPROXIMATE.
3. DOUBLE CONTAINMENT END TERMINATIONS WITH LOW POINT DRAINS TO BE INSTALLED WHERE INDICATED ON DRAWINGS C-6 AND C-10.
4. SEE SHEET C-13 FOR TYPICAL TRENCH CROSS SECTIONS AT LATERAL LINES AND MULTIPHASE LINES.
5. ALL LATERAL LINES TO HAVE A CLEANOUT PORT INSTALLED NEAR INTERSECTION OF LATERAL LINE WITH MAIN LINE. SEE SHEET M-4 FOR LATERAL LINE CLEANOUT PORT DETAIL.

SOURCE:

EARTH TECH INC. 60% DESIGN SUBMITTAL, REMEDIAL DESIGN SHALLOW GROUNDWATER UNIT REMEDY, IRP SITE 24, DECEMBER 2003, NAVAL FACILITIES ENGINEERING COMMAND CONTRACT N6272-94-D-0048.

Underground Service Alert
Call:TOll FREE
1-800
422-4133
TWO WORKING DAYS BEFORE YOU DIG

NO.	DATE	APPR	REVISION
A	1/04		90% DESIGN SUBMITTAL
B	10/04		100% DESIGN
C	2/05		FINAL 100% DESIGN/ISSUED FOR CONSTRUCTION

NO.	DATE	LEGEND	REVISION

DEPARTMENT OF THE NAVY
SOUTHWEST DIVISION
San Diego California

WESTON SOLUTIONS
Walnut Creek California

CHECKED	DATE	CLIENT APPROVALS	DATE
DES. ENG.			
PROJ. ENG.			
PROJ. MGR.			
APPROVED			
APPROVED		ISSUED FOR	DATE

EXISTING SITE CONDITIONS AND KEY PLAN

REMEDIAL DESIGN SHALLOW GROUNDWATER UNIT REMEDY

DRAWN	DATE	DWG. NO.	REV. NO.
D.C.H.	JANUARY 2004	C-1	C
SCALE 1"=250'	W.O. NO. 12954002004001020	SHT. — OF —	

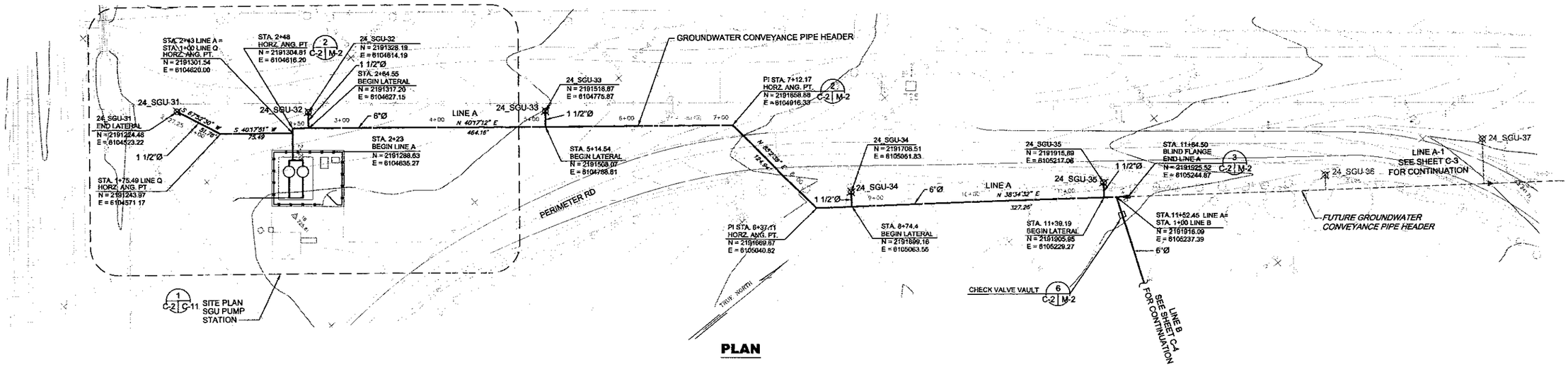

PLAN

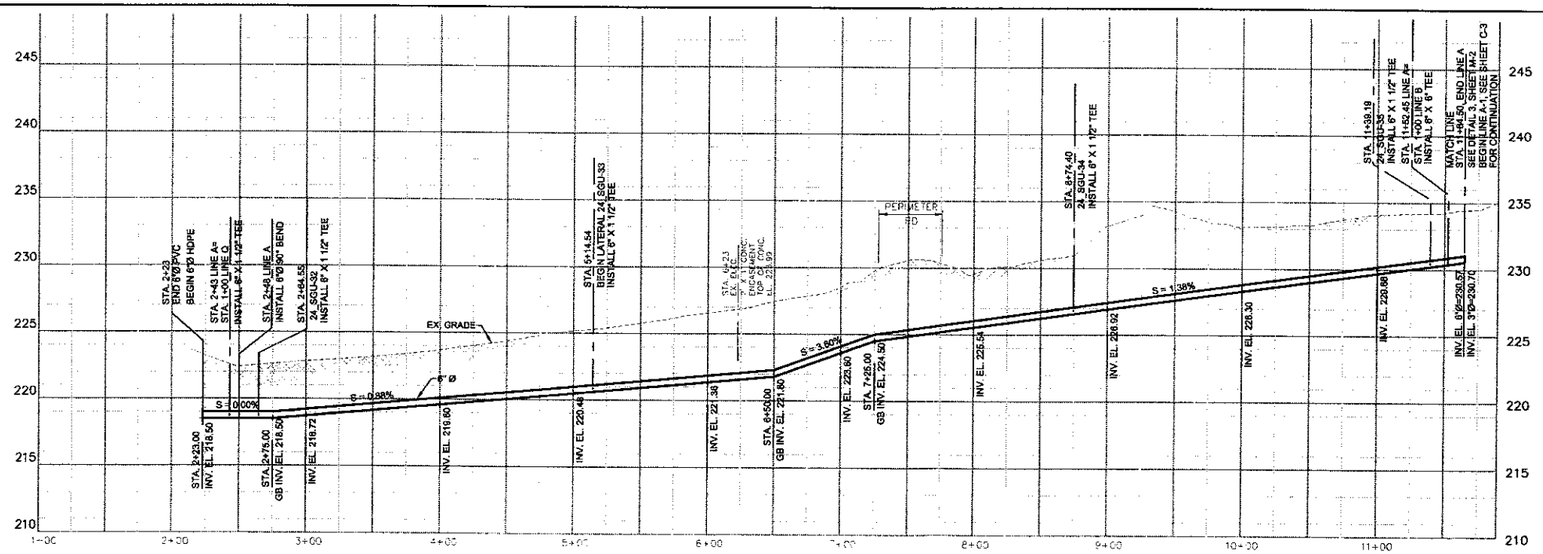

PROFILE

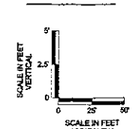

REGISTERED PROFESSIONAL ENGINEER
35971
6/30/06
CIVIL
STATE OF CALIFORNIA

NOTES:

1. SEE SHEET T-2 FOR ABBREVIATIONS, GENERAL NOTES, LEGEND AND SYMBOLS.
2. SEE SHEET C-1 FOR KEY PLAN.

SOURCE:

EARTH TECH, INC. 60% DESIGN SUBMITTAL, REMEDIAL DESIGN SHALLOW GROUNDWATER UNIT REMEDY, IRP SITE 24, DECEMBER 2003, NAVAL FACILITIES ENGINEERING COMMAND CONTRACT N6272-94-D-0048

Underground Service Alert
Call: TOLL FREE
1-800
422-4133
TWO WORKING DAYS BEFORE YOU DIG

NO.	DATE	APPR.	REVISION
A	1/04		90% DESIGN SUBMITTAL
B	10/04		100% DESIGN
C	2/05		FINAL 100% DESIGN/ISSUED FOR CONSTRUCTION

DEPARTMENT OF THE NAVY
SOUTHWEST DIVISION
San Diego California

WESTON SOLUTIONS
Walnut Creek California

CHECKED	DATE	CLIENT APPROVALS	DATE
DES ENG			
PROJ. ENG			
PROJ. MGR			
APPROVED		ISSUED FOR	DATE

PLAN AND PROFILE
STA. 2+23 TO STA. 11+64.50, LINE A
REMEDIAL DESIGN SHALLOW GROUNDWATER UNIT REMEDY

DRAWN	DATE	DWG. NO.	REV. NO.
D.C.H.	JANUARY 2004	C-2	C
SCALE	W.O. NO.	SHT.	OF
AS NOTED	12954002004001020	–	–

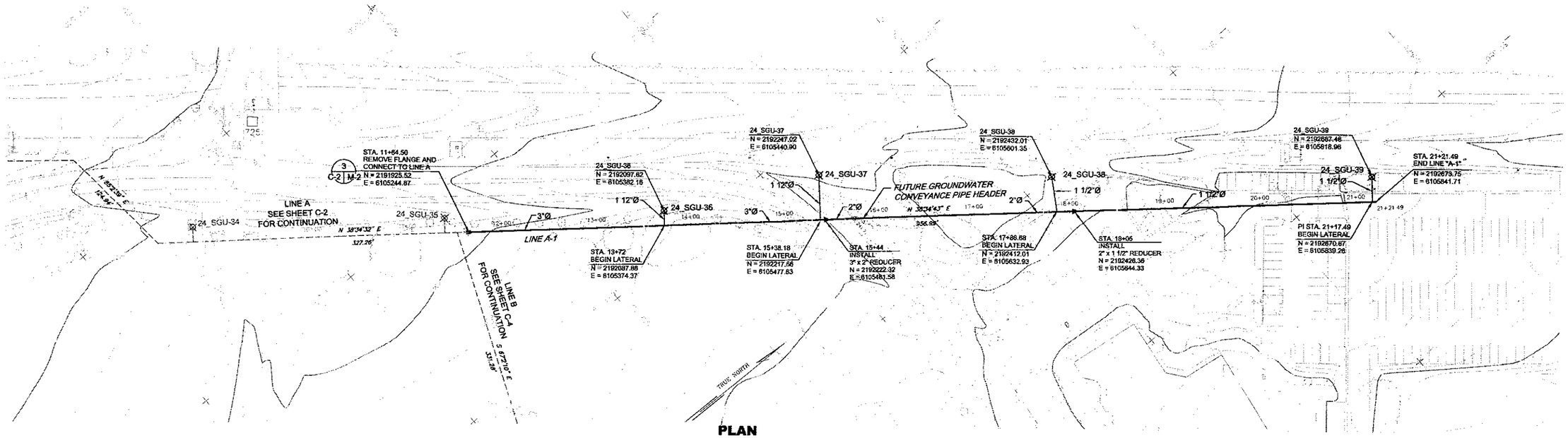

PLAN

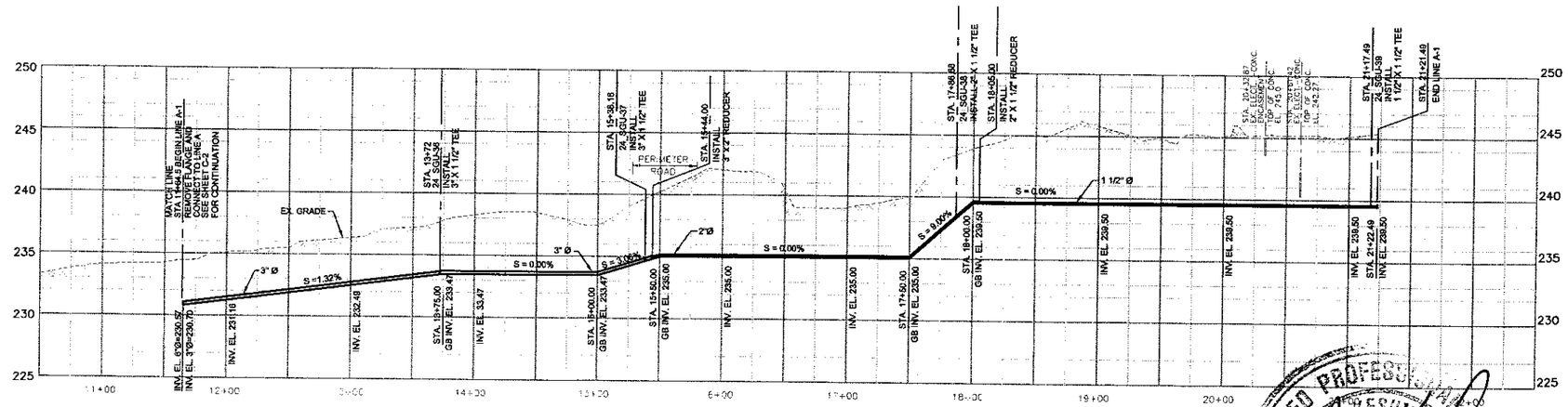

PROFILE

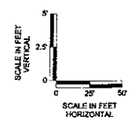

NOTES:

1. SEE SHEET T-2 FOR ABBREVIATIONS, GENERAL NOTES, LEGEND AND SYMBOLS.
2. SEE SHEET C-1 FOR KEY PLAN.

REGISTERED PROFESSIONAL ENGINEER
05071
6/30/06
CIVIL
STATE OF CALIFORNIA

SOURCE:
EARTH TECH INC. 60% DESIGN SUBMITTAL, REMEDIAL DESIGN SHALLOW GROUNDWATER UNIT REMEDY, IRP SITE 24, DECEMBER 2003, NAVAL FACILITIES ENGINEERING COMMAND CONTRACT N6272-94-D-0048

Underground Service Alert
Call:TOll FREE
1-800
422-4133
TWO WORKING DAYS BEFORE YOU DIG

NO.	DATE	APPR.	REVISION
A	1/04		90% DESIGN SUBMITTAL
B	10/04		100% DESIGN
C	2/05		FINAL 100% DESIGN, ISSUED FOR CONSTRUCTION

NO.	DATE	APPR.	REVISION

DEPARTMENT OF THE NAVY
SOUTHWEST DIVISION
San Diego California

WESTON SOLUTIONS

CHECKED	DATE	CLIENT APPROVALS	DATE
DES. ENG.			
PROJ. ENG.			
PROJ. MGR.			
APPROVED			
APPROVED		ISSUED FOR	DATE

PLAN AND PROFILE – FUTURE GROUNDWATER CONVEYANCE PIPE HEADER, LINE A–1
REMEDIAL DESIGN SHALLOW GROUNDWATER UNIT REMEDY

DRAWN D.C.H.	DATE JANUARY 2004	DWG. NO. C–3	REV. NO. C
SCALE AS NOTED	W.O. NO. 12954002004001020	SHT. ___ OF ___	

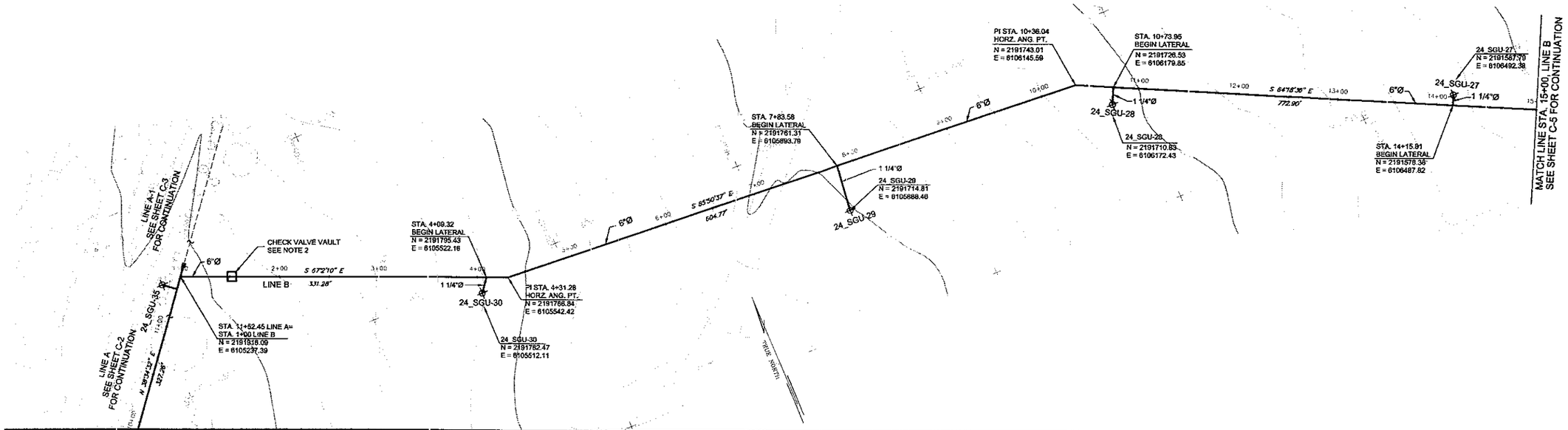

PLAN

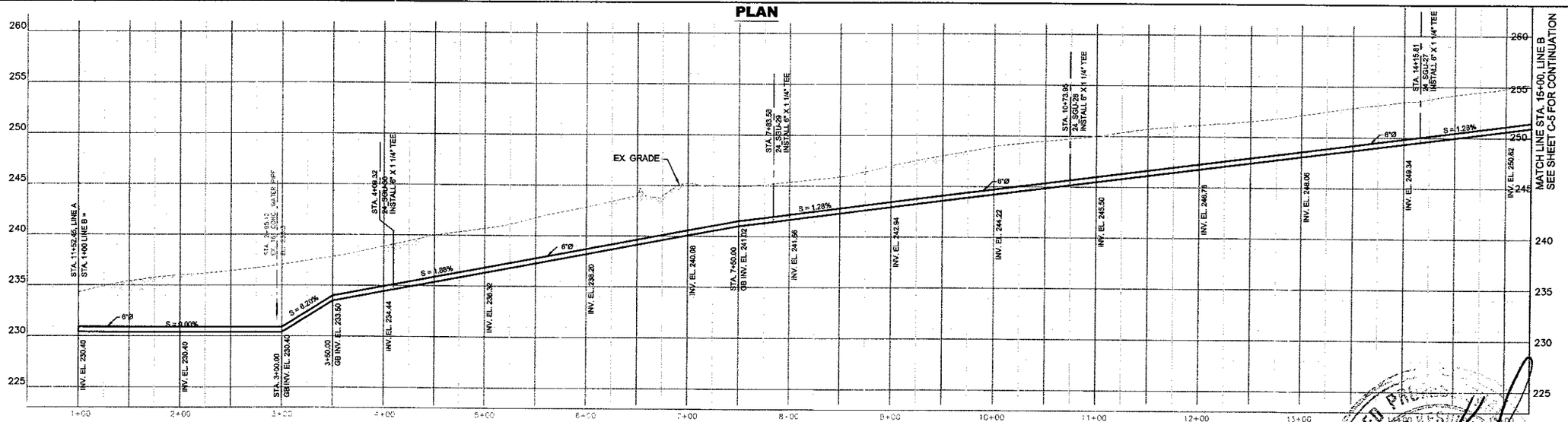

PROFILE

NOTES:

1. SEE SHEET T-2 FOR ABBREVIATIONS, GENERAL NOTES LEGEND AND SYMBOLS.
2. SEE SHEET C-1 FOR KEY PLAN
3. SEE SHEET C-13 FOR TYPICAL LATERAL LINE TRENCH CROSS SECTIONS
4. SEE SHEET M-2 FOR CHECK VALVE VAULT.

SCALE IN FEET VERTICAL: 0, 2.5, 5
SCALE IN FEET HORIZONTAL: 0, 25, 50

SOURCE:
EARTH TECH INC. 60% DESIGN SUBMITTAL, REMEDIAL DESIGN SHALLOW GROUNDWATER UNIT REMEDY, IRP SITE 24, DECEMBER 2003, NAVAL FACILITIES ENGINEERING COMMAND CONTRACT N6272-94-D-0048.

REGISTERED PROFESSIONAL ENGINEER
05971
6/30/06
CIVIL
STATE OF CALIFORNIA

Underground Service Alert
Call:TOLL FREE
1-800
422-4133
TWO WORKING DAYS BEFORE YOU DIG

NO	DATE	APPR.	REVISION	NO	DATE	APPR.	REVISION
A	1/04		90% DESIGN SUBMITTAL				
B	10/04		100% DESIGN				
C	2/05		FINAL 100% DESIGN ISSUED FOR CONSTRUCTION				

DEPARTMENT OF THE NAVY
SOUTHWEST DIVISION
San Diego California

WESTON SOLUTIONS

CHECKED	DATE	CLIENT APPROVALS	DATE
DES. ENG.			
PROJ. ENG.			
PROJ. MGR.			
APPROVED			
APPROVED		ISSUED FOR	DATE

PLAN AND PROFILE
STA. 1+00 TO STA. 15+00, LINE B
REMEDIAL DESIGN SHALLOW GROUNDWATER UNIT REMEDY

DRAWN	DATE	DWG. NO.	REV. NO.
D.C.H.	JANUARY 2004	C-4	C
SCALE	W.O. NO.		
AS NOTED	12954002004001020	SHT. – OF –	

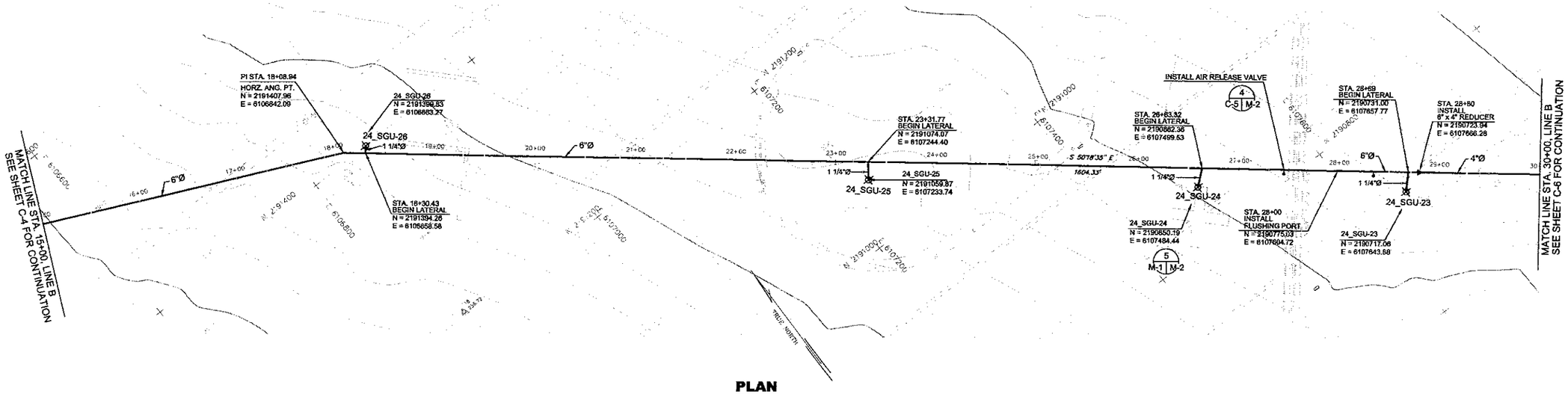

PLAN

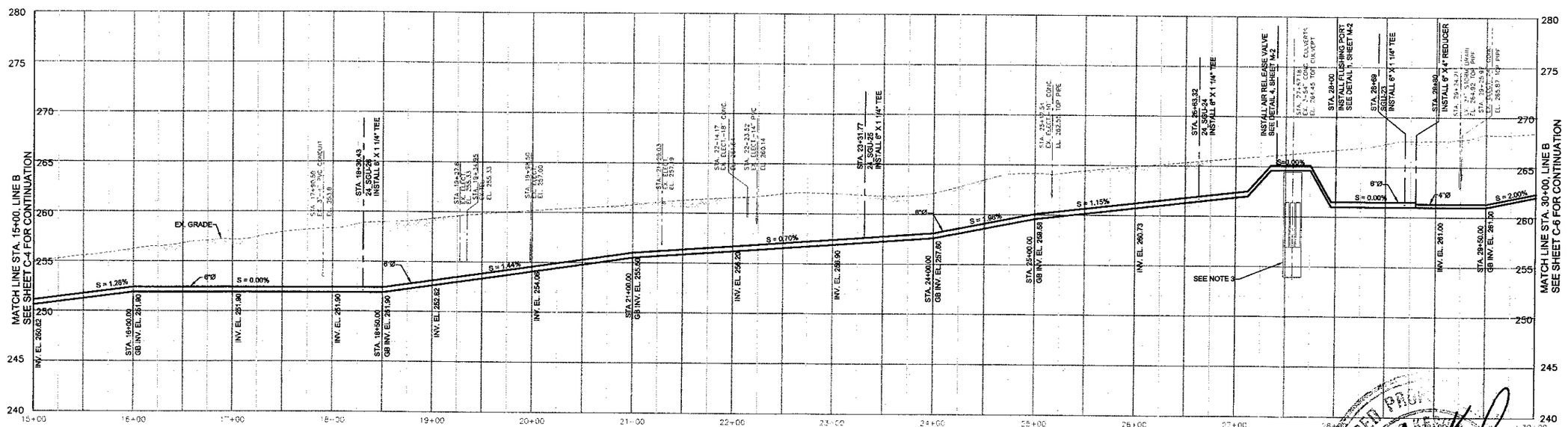

PROFILE

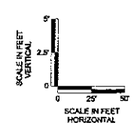

NOTES:

1. SEE SHEET T-2 FOR ABBREVIATIONS, GENERAL NOTES, LEGEND AND SYMBOLS.
2. SEE SHEET C-1 FOR KEY PLAN.
3. SEE SHEET C-13 FOR TYPICAL LATERAL LINE TRENCH CROSS SECTIONS.

SOURCE:
EARTH TECH INC. 60% DESIGN SUBMITTAL, REMEDIAL DESIGN SHALLOW GROUNDWATER UNIT REMEDY, IRP SITE 24, DECEMBER 2003, NAVAL FACILITIES ENGINEERING COMMAND CONTRACT N6272-94-D-0048

REGISTERED PROFESSIONAL ENGINEER
BERT A. PEREZ
25971
6/30/06
CIVIL
STATE OF CALIFORNIA

Underground Service Alert
Call: TOLL FREE
1-800
422-4133
TWO WORKING DAYS BEFORE YOU DIG

NO.	DATE	APPR.	REVISION	NO.	DATE	APPR.	REVISION
A	1/04		90% DESIGN SUBMITTAL				
B	10/04		100% DESIGN				
C	12/05		FINAL 100% DESIGN ISSUED FOR CONSTRUCTION				

DEPARTMENT OF THE NAVY
SOUTHWEST DIVISION
San Diego California

WESTON SOLUTIONS
Walnut Creek California

CHECKED	DATE	CLIENT APPROVALS	DATE
ELS. ENG.			
PROJ. ENG.			
PROJ. MGR.			
APPROVED			
APPROVED		ISSUED FOR	DATE

PLAN AND PROFILE
STA. 15+00 TO STA. 30+00, LINE B
REMEDIAL DESIGN SHALLOW GROUNDWATER UNIT REMEDY

DRAWN D.C.H.	DATE JANUARY 2004	DWG. NO. C-5	REV. NO. C
SCALE AS NOTED	W.O. NO. 12954002004001020	SHT. ___ OF ___	

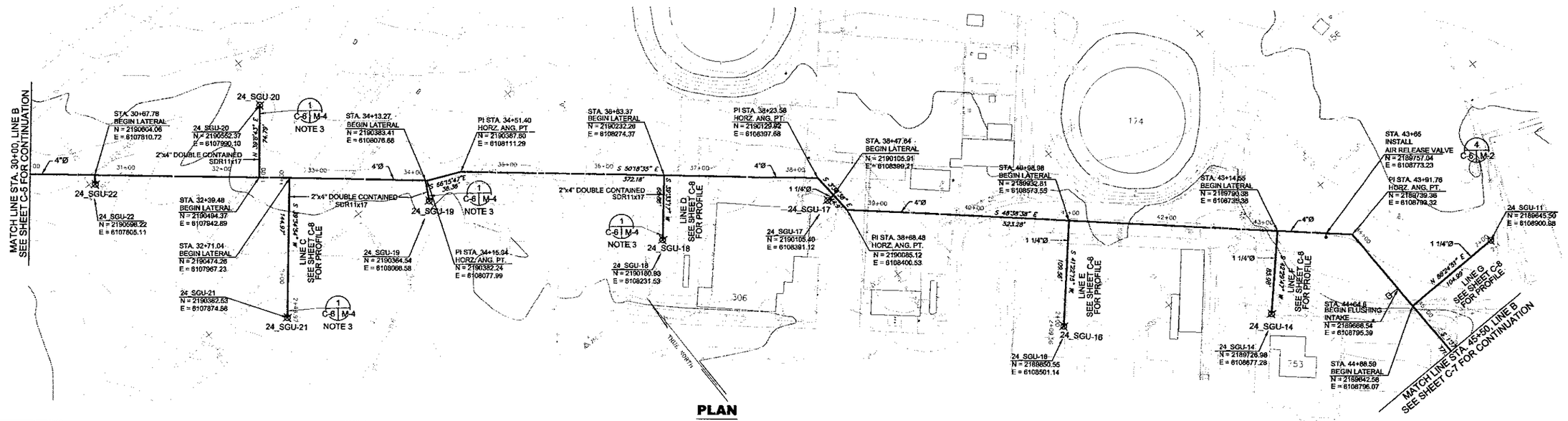

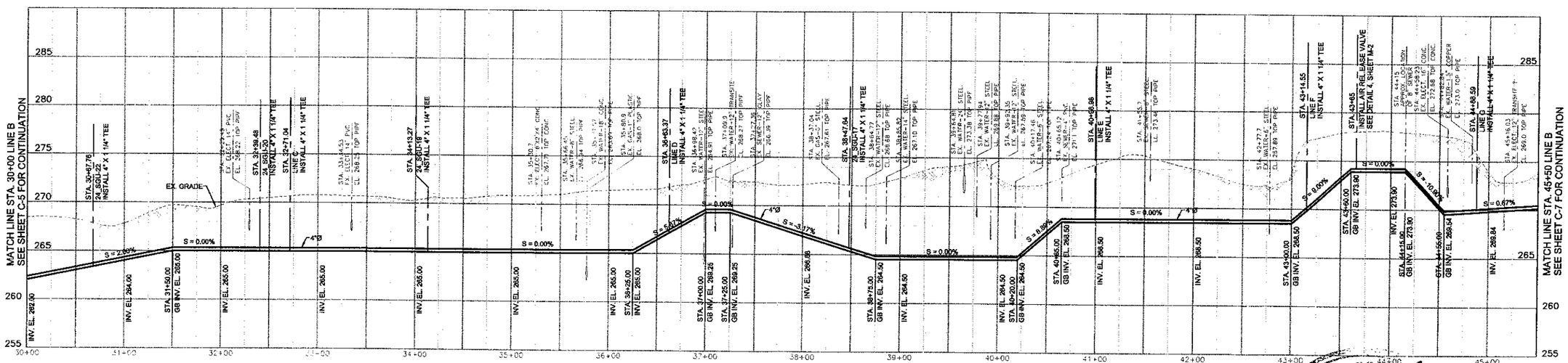

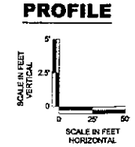

NOTES:

1. SEE SHEET T-2 FOR ABBREVIATIONS, GENERAL NOTES LEGEND AND SYMBOLS.
2. SEE SHEET C-1 FOR KEY PLAN.
3. INSTALL DOUBLE CONTAINMENT END TERMINATIONS WITH LOW POINT DRAIN AND INSPECTION PORT AT LOW POINT IN LATERAL LINE

SOURCE:
EARTH TECH INC. 60% DESIGN SUBMITTAL REMEDIAL DESIGN SHALLOW GROUNDWATER UNIT REMEDY, IRP SITE 24, DECEMBER 2003, NAVAL FACILITIES ENGINEERING COMMAND CONTRACT N6272-94-D-0048

REGISTERED PROFESSIONAL ENGINEER
BERT KESSLER JR.
05971
6/30/06
CIVIL
STATE OF CALIFORNIA

Underground Service Alert
Call TOLL FREE
1-800
422-4133

NO.	DATE	APPR.	REVISION	NO.	DATE	APPR.	REVISION
A	3-04		90% DESIGN SUBMITTAL				
B	10-04		100% DESIGN				
C	2-06		FINAL 100% DESIGN ISSUED FOR CONSTRUCTION				

DEPARTMENT OF THE NAVY
SOUTHWEST DIVISION
San Diego California

WESTON SOLUTIONS
Walnut Creek California

CHECKED	DATE	CLIENT APPROVALS	DATE
DES. ENG.			
PROJ. ENG.			
PROJ. MGR.			
APPROVED			
APPROVED		ISSUED FOR	DATE

PLAN AND PROFILE
STA. 30+00 TO STA. 45+50, LINE B
REMEDIAL DESIGN SHALLOW GROUNDWATER UNIT REMEDY

DRAWN	DATE	DWG. NO.	REV. NO.
D.C.H.	JANUARY 2004	C-6	C
SCALE	A.O. NO.		
AS NOTED	1295400200401020		

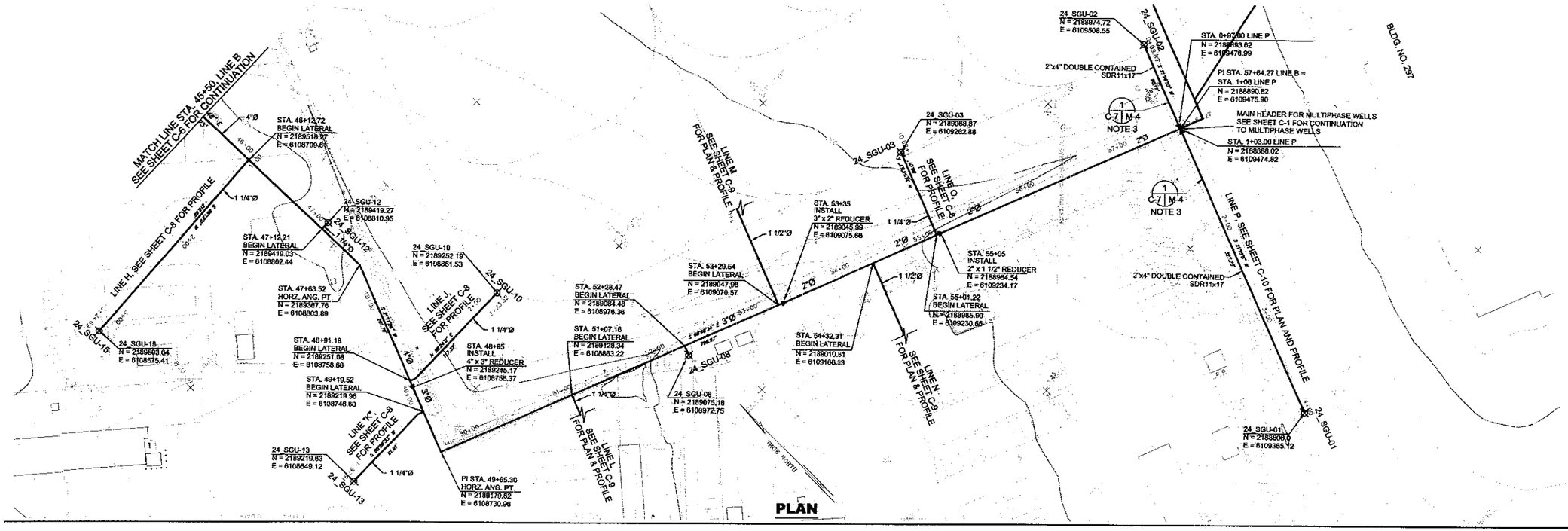

PLAN

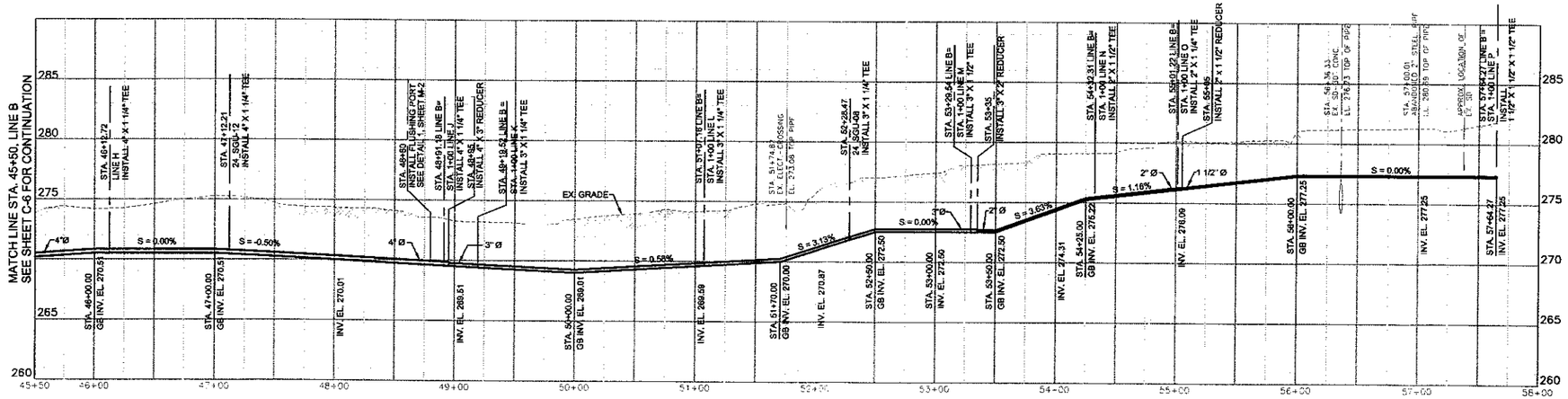

PROFILE

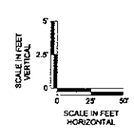

NOTES:

1. SEE SHEET T-2 FOR ABBREVIATIONS, GENERAL NOTES LEGEND AND SYMBOLS.
2. SEE SHEET C-1 FOR KEY PLAN
3. INSTALL DOUBLE CONTAINMENT END TERMINATIONS WITH LOW POINT DRAIN AND INSPECTION PORT AT LOW POINT IN LATERAL LINE

SOURCE:

EARTH TECH, INC. 60% DESIGN SUBMITTAL, REMEDIAL DESIGN SHALLOW GROUNDWATER UNIT REMEDY, IRP SITE 24, DECEMBER 2003, NAVAL FACILITIES ENGINEERING COMMAND CONTRACT N6272-94-D-0048.

Underground Service Alert
Call:TOll FREE
1-800
422-4133
TWO WORKING DAYS BEFORE YOU DIG

REGISTERED PROFESSIONAL ENGINEER
BERT KESSLER
35971
6/30/06
CIVIL
STATE OF CALIFORNIA

NO	DATE	APP	REVISION	NO	DATE	APP	REVISION
A	1/04		90% DESIGN SUBMITTAL				
B	10/04		100% DESIGN				
C	3/05		FINAL 100% DESIGN/ISSUED FOR CONSTRUCTION				

DEPARTMENT OF THE NAVY
SOUTHWEST DIVISION
San Diego California

WESTON SOLUTIONS
Walnut Creek California

CHECKED	DATE	CLIENT APPROVALS	DATE
CES ENG			
PROJ. ENG.			
PROJ. MGR.			
APPROVED			
APPROVED		ASSIST FCR	DATE

PLAN AND PROFILE
STA. 45+50 TO STA. 57+64.27, END LINE B
REMEDIAL DESIGN SHALLOW GROUNDWATER UNIT REMEDY

DRAWN	DATE	DWG NO	REV. NO
D.C.H.	JANUARY 2004	C-7	C
SCALE	W.O. NO	SHT	OF
AS NOTED	1295400200400 1020	-	-

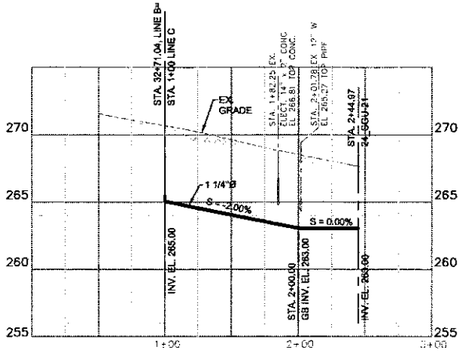

PROFILE - LINE C
SEE SHEET C-6 FOR PLAN

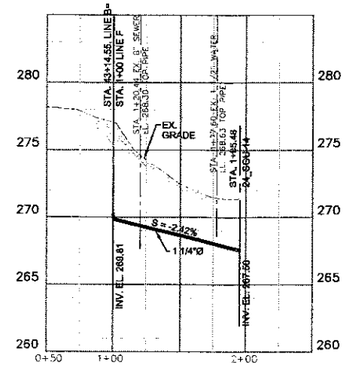

PROFILE - LINE F
SEE SHEET C-6 FOR PLAN

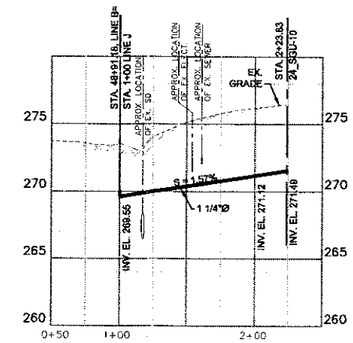

PROFILE - LINE J
SEE SHEET C-7 FOR PLAN

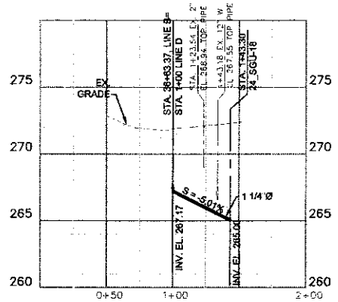

PROFILE - LINE D
SEE SHEET C-6 FOR PLAN

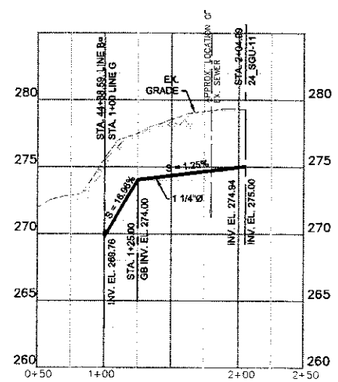

PROFILE - LINE G
SEE SHEET C-6 FOR PLAN

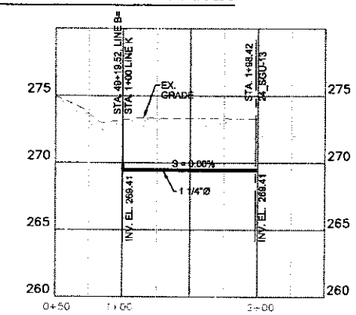

PROFILE - LINE K
SEE SHEET C-7 FOR PLAN

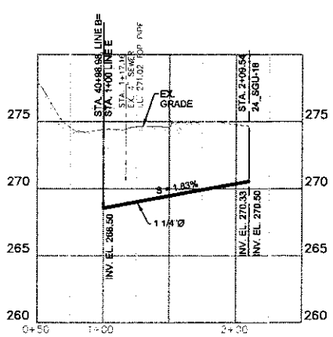

PROFILE - LINE E
SEE SHEET C-6 FOR PLAN

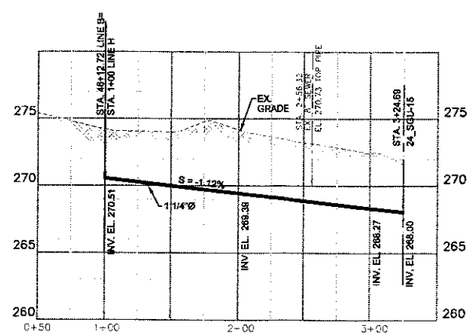

PROFILE - LINE H
SEE SHEET C-7 FOR PLAN

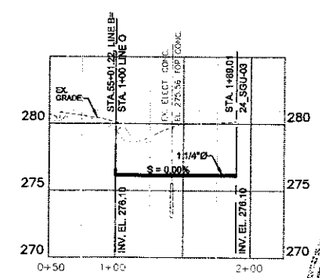

PROFILE - LINE O
SEE SHEET C-7 FOR PLAN

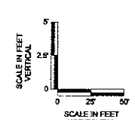

NOTES:

1. SEE SHEET T-2 FOR ABBREVIATIONS, GENERAL NOTES LEGEND AND SYMBOLS
2. SEE SHEET C-1 FOR KEY PLAN.

SOURCE:
EARTH TECH INC. 60% DESIGN SUBMITTAL, REMEDIAL DESIGN SHALLOW GROUNDWATER UNIT REMEDY, IRP SITE 24, DECEMBER 2003, NAVAL FACILITIES ENGINEERING COMMAND CONTRACT N6272-94-D-0048.

REGISTERED PROFESSIONAL ENGINEER BERG KESHIAN 35971 6/30/06 CIVIL STATE OF CALIFORNIA

Underground Service Alert
Call:TOLL FREE 1-800 422-4133
TWO WORKING DAYS BEFORE YOU DIG

NO.	DATE	APPR.	REVISION
A	1/04		90% DESIGN SUBMITTAL
B	10/04		100% DESIGN
C	1/05		FINAL 100% DESIGN ISSUED FOR CONSTRUCTION

DEPARTMENT OF THE NAVY
SOUTHWEST DIVISION
San Diego California

WESTON SOLUTIONS
Walnut Creek California

CHECKED	DATE	CLIENT APPROVALS	DATE
DES. ENG.			
PROJ. ENG.			
PROJ. MGR.			
APPROVED			
APPROVED		ISSUED FOR	DATE

PROFILES, LATERAL LINES C THRU K AND PROFILE LINE O
REMEDIAL DESIGN SHALLOW GROUNDWATER UNIT REMEDY

DRAWN	DATE	DWG. NO.	REV. NO.
D.C.H.	JANUARY 2004	C-8	C
SCALE AS NOTED	W.O. NO. 11795-002004001000	SHT. — OF —	

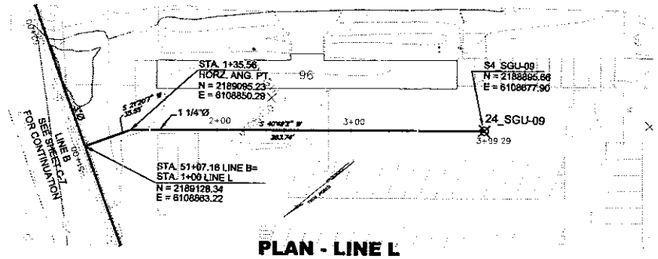

PLAN - LINE L

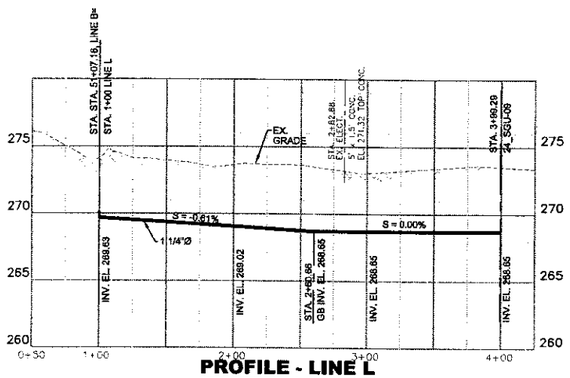

PROFILE - LINE L

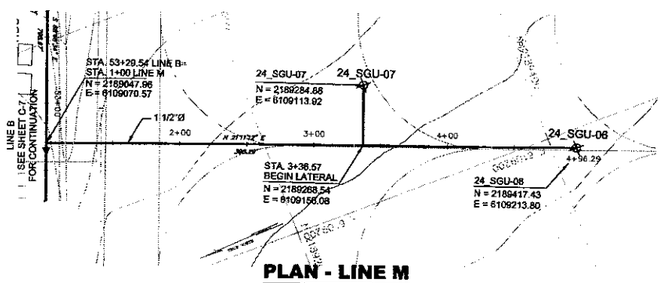

PLAN - LINE M

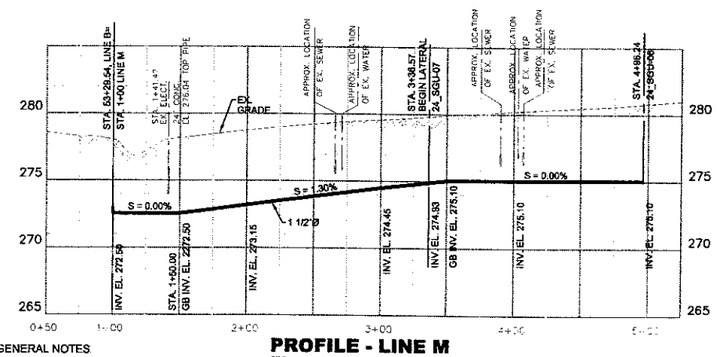

PROFILE - LINE M

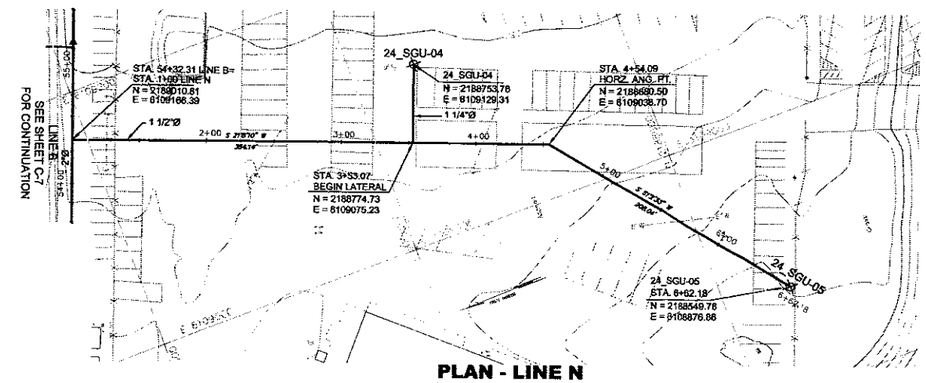

PLAN - LINE N

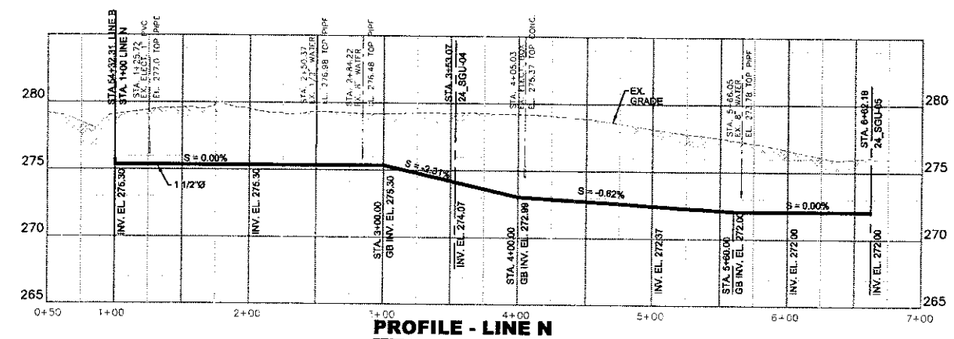

PROFILE - LINE N

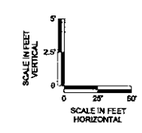

REGISTERED PROFESSIONAL ENGINEER
BERG KESHIAN
35971
6/30/06
CIVIL
STATE OF CALIFORNIA

NOTES:

1. SEE SHEET T-2 FOR ABBREVIATIONS, GENERAL NOTES, LEGEND AND SYMBOLS.
2. SEE SHEET C-1 FOR KEY PLAN.

SOURCE:
EARTH TECH, INC. 60% DESIGN SUBMITTAL, REMEDIAL DESIGN SHALLOW GROUNDWATER UNIT REMEDY, IRP SITE 24, DECEMBER 2003, NAVAL FACILITIES ENGINEERING COMMAND CONTRACT N6272-94-D-0048.

Underground Service Alert
Call:TOll FREE
1-800
422-4133
TWO WORKING DAYS BEFORE YOU DIG

NO	DATE	APPR.	REVISION	NO	DATE	APPR	REVISION
A	1/04		90% DESIGN SUBMITTAL				
B	10/04		100% DESIGN				
C	2/05		FINAL 100% DESIGN, ISSUED FOR CONSTRUCTION				

DEPARTMENT OF THE NAVY
SOUTHWEST DIVISION
San Diego California

WESTON SOLUTIONS

CHECKED	DATE	CLIENT APPROVALS	DATE
EES ENG			
PROJ. ENG			
PROJ. MGR			
APPROVED			
APPROVED		ISSUED FOR	DATE

PLAN AND PROFILES, LINES L, M, AND N

REMEDIAL DESIGN SHALLOW GROUNDWATER UNIT REMEDY

DRAWN	DATE	DWG NO.	REV. NO.
D.C.H.	JANUARY 2004	C-9	C
SCALE	W.O. NO.		
AS NOTED	12954002004001020	SHT. - OF -	

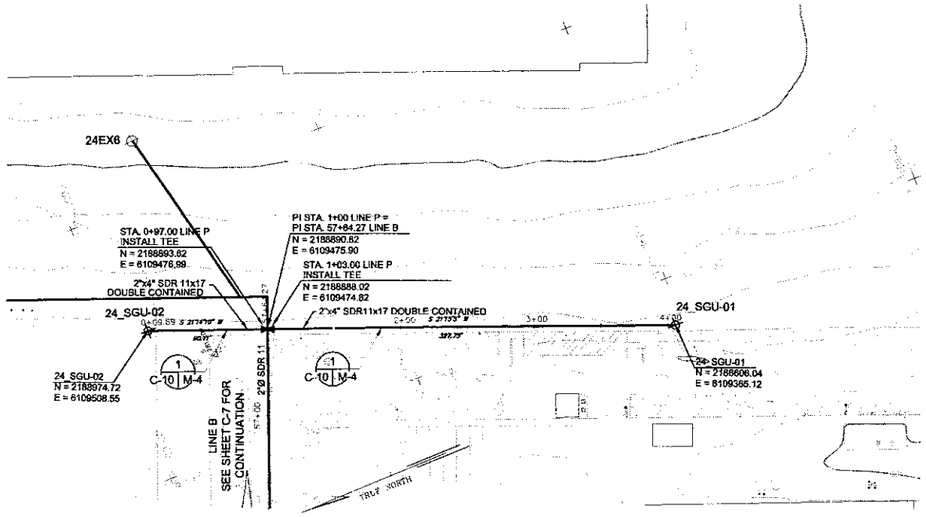

PLAN - LINE P

SEE SHEET C-11 FOR PLAN LINE Q

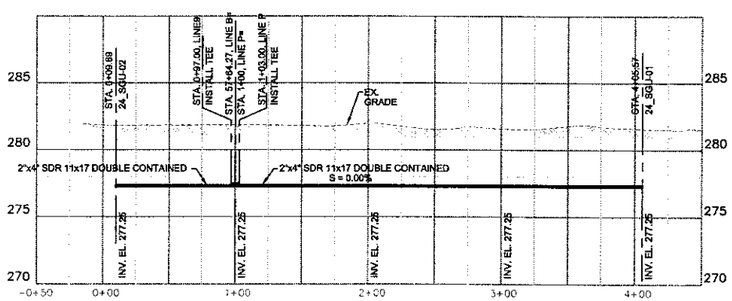

PROFILE - LINE P

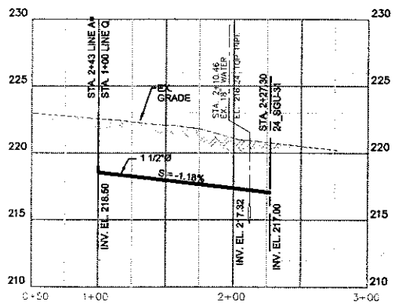

PROFILE - LINE Q

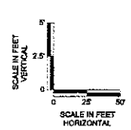

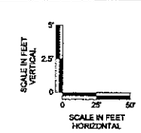

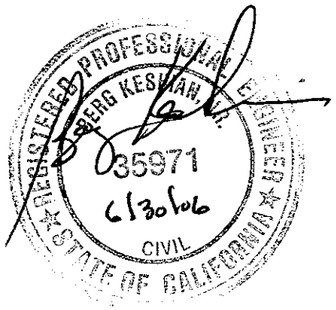

NOTES:

1. SEE SHEET T-2 FOR ABBREVIATIONS, GENERAL NOTES, LEGEND AND SYMBOLS.
2. SEE SHEET C-1 FOR KEY PLAN.
3. INSTALL DOUBLE CONTAINMENT END TERMINATIONS WITH LOW POINT DRAIN AND INSPECTION PORT AT LOW POINT IN LATERAL LINE

SOURCE:
EARTH TECH, INC. 60% DESIGN SUBMITTAL, REMEDIAL DESIGN SHALLOW GROUNDWATER UNIT REMEDY, IRP SITE 24, DECEMBER 2003, NAVAL FACILITIES ENGINEERING COMMAND CONTRACT N6272-94-D-0048.

Underground Service Alert
Call:TOll FREE
1-800
422-4133
TWO WORKING DAYS BEFORE YOU DIG

NO.	DATE	APPR	REVISION
A	11/04		90% DESIGN SUBMITTAL
B	10/04		100% DESIGN
C	2/05		FINAL 100% DESIGN, ISSUED FOR CONSTRUCTION

DEPARTMENT OF THE NAVY
SOUTHWEST DIVISION
San Diego California

WESTON SOLUTIONS
Walnut Creek California

CHECKED	DATE	CLIENT APPROVALS	DATE
DES. ENG			
PROJ. ENG			
PROJ. MGR			
APPROVED			
APPROVED		ISSUED FOR	DATE

PLAN AND PROFILE STA. 0+10 TO STA. 4+00, LINE P & PROFILE LINE Q
REMEDIAL DESIGN SHALLOW GROUNDWATER UNIT REMEDY

DRAWN	DATE	DWG NO	REV. NO
D.C.H.	JANUARY 2004	C-10	C
SCALE	W.O. NO		
AS NOTED	12954002004001020	SHT - OF -	

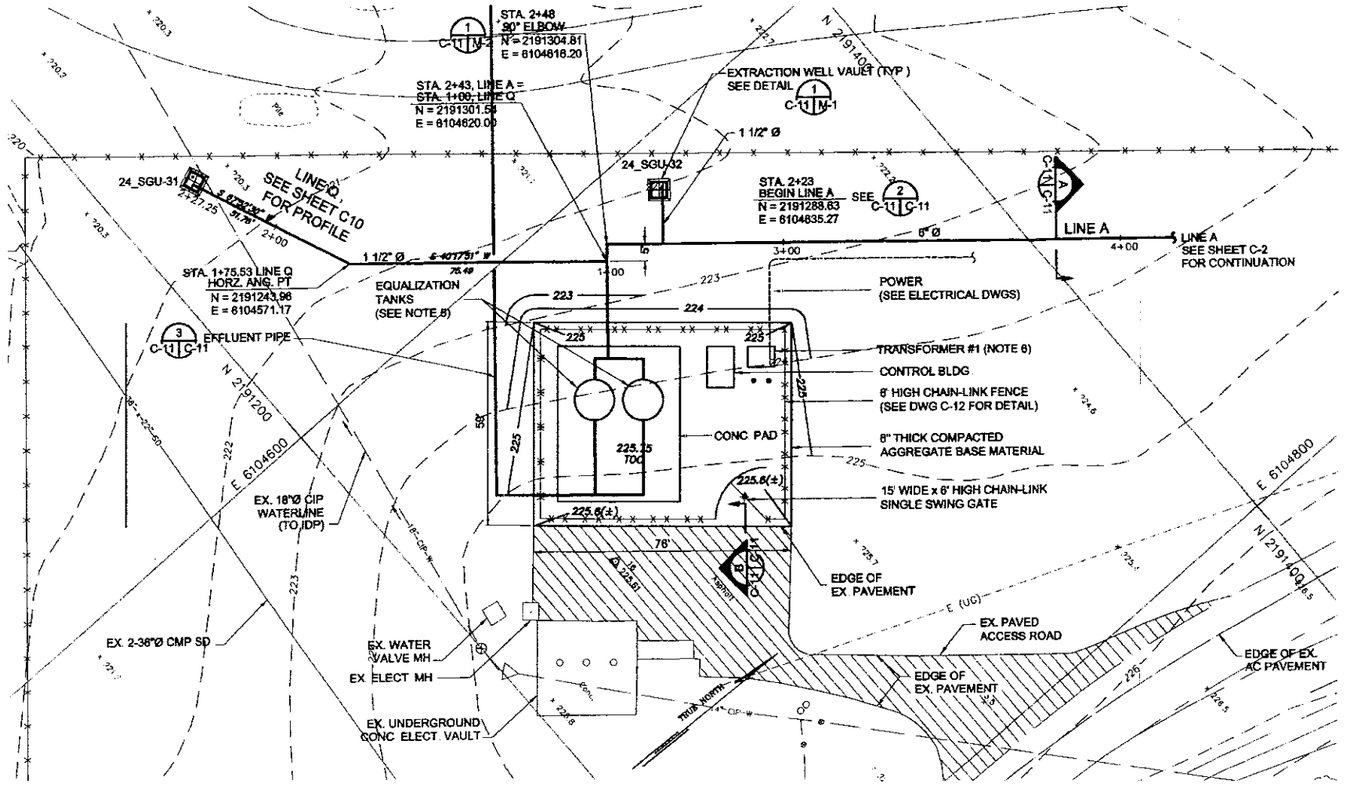

1 C-2 C-11 **SITE PLAN - SGU PUMP STATION**

20 0 20 40
SCALE IN FEET

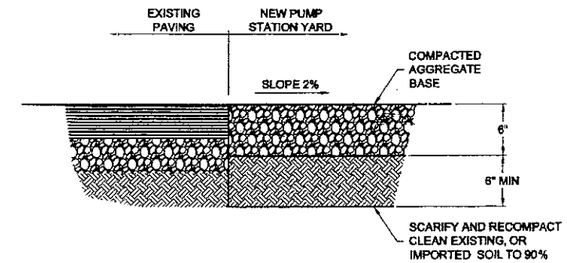

B C-11 C-11 **YARD SECTION**
NOT TO SCALE

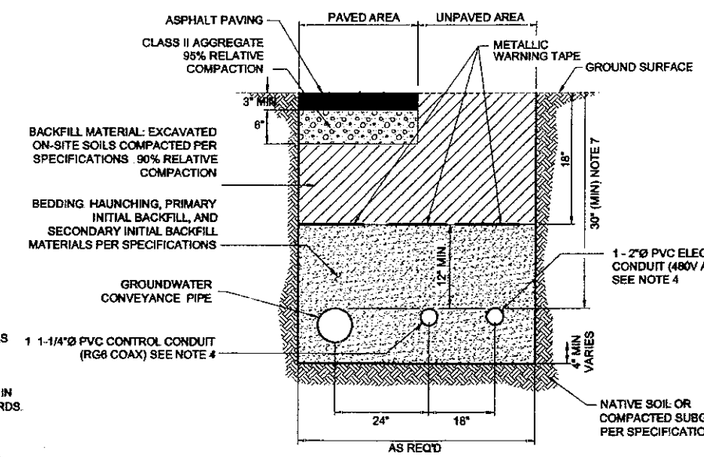

A C-11 C-11 **SECTION - TRENCHING**
NOT TO SCALE

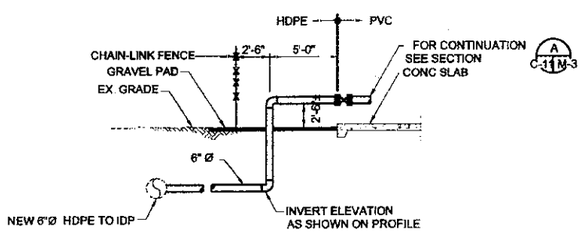

3 C-11 C-11 **DETAIL**
NOT TO SCALE

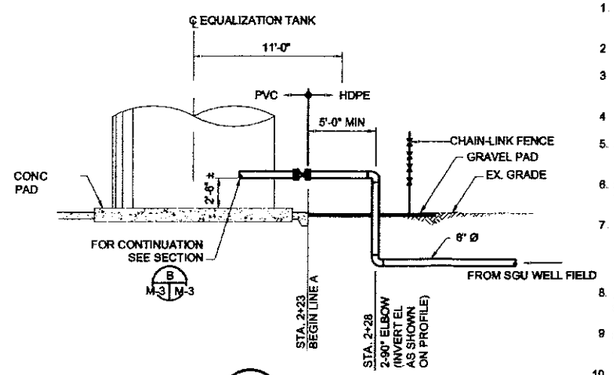

2 C-11 C-11 **DETAIL**
NOT TO SCALE

NOTES:

1. SEE SHEET T-2 FOR ABBREVIATIONS, GENERAL NOTES, LEGEND AND SYMBOLS
2. SEE SHEET C-1 FOR KEY PLAN.
3. ALL TRENCHING SHALL BE CONDUCTED IN ACCORDANCE WITH CAL OSHA STANDARDS.
4. NUMBER OF CONDUITS MAY VARY
5. SEE SHEETS S-1 & M-3 FOR STRUCTURAL DETAILS AND PIPING LAYOUT
6. SEE SHEET C-7 FOR LOCATION OF TRANSFORMER #2.
7. REFER TO SCE STANDARDS AND ELECTRICAL DRAWINGS FOR MINIMUM REQUIREMENTS FOR TRENCHING AND INSTALLATION OF NEW PRIMARY POWER TO TRANSFORMERS.
8. ALL ELEVATIONS ARE APPROXIMATE AND SHALL BE VERIFIED IN THE FIELD
9. SEE PROJECT SPECIFICATIONS FOR ADDITIONAL REQUIREMENTS.
10. ASPHALT PAVING TO BE INSTALLED AT PERIMETER ROAD CROSSING ONLY.

SOURCE:
EARTH TECH, INC. 60% DESIGN SUBMITTAL, REMEDIAL DESIGN SHALLOW GROUNDWATER UNIT REMEDY IRP SITE 24, DECEMBER 2003, NAVAL FACILITIES ENGINEERING COMMAND CONTRACT N6272-94-D-0048.

Underground Service Alert
Call:TOll FREE
1-800
227-2600
TWO WORKING DAYS BEFORE YOU DIG

NO.	DATE	APPR.	REVISION
A	1/04		90% DESIGN SUBMITTAL
B	6/04		MODIFIED SGU LAYOUT
C	1/04		100% DRAFT DESIGN SUBMITTAL
D	2/05		FINAL 100% DESIGN / ISSUED FOR CONSTRUCTION

DEPARTMENT OF THE NAVY
SOUTHWEST DIVISION
San Diego California

WESTON SOLUTIONS
Walnut Creek California

CHECKED	DATE	CLIENT APPROVALS	DATE
DES. ENG.			
PROJ. ENG.			
PROJ. MGR.			
APPROVED			
APPROVED		ISSUED FOR	DATE

REGISTERED PROFESSIONAL ENGINEER
TIMOTHY D. MAHER
No. C 52909
Exp. 6/30/06
CIVIL
STATE OF CALIFORNIA

SITE PLAN AND DETAILS – SGU PUMP STATION

REMEDIAL DESIGN SHALLOW GROUNDWATER UNIT REMEDY

DRAWN	DATE	DWG. NO.	REV. NO.
D.C.H.	JANUARY 2004	C–11	C
SCALE: AS NOTED	W.O. NO.: 12954002004001020	SHT. – OF –	

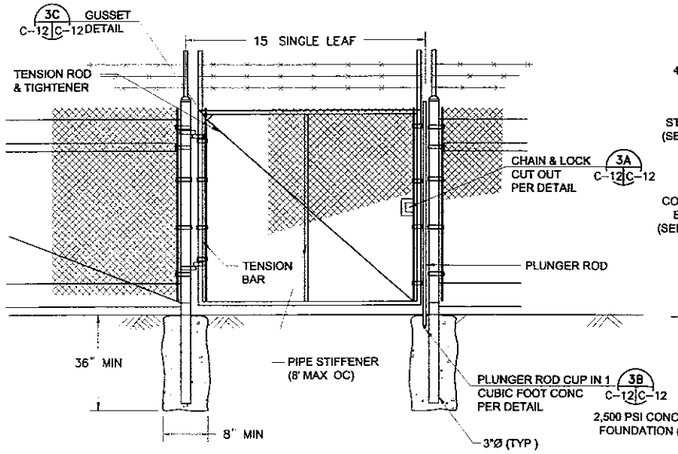

2 DRIVE GATE
C-12 C-12 NOT TO SCALE

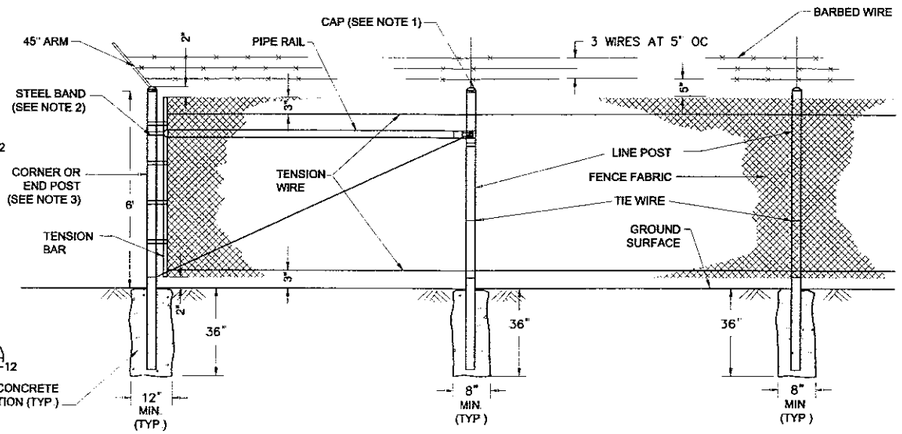

1 TYPICAL FENCE DETAIL
C-12 C-12 NOT TO SCALE

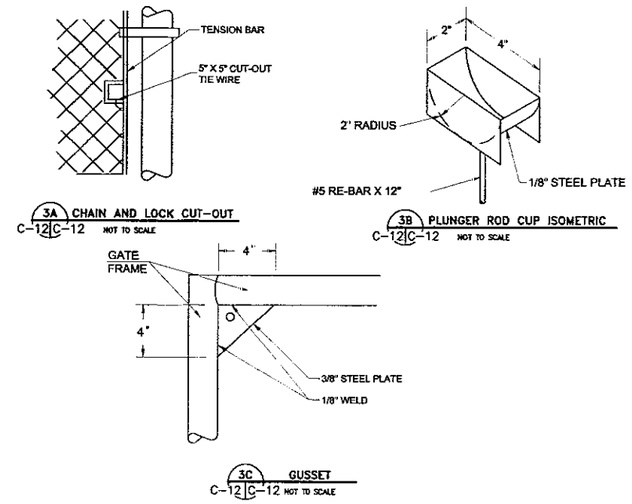

3 FENCE DETAILS
C-12 C-12 NOT TO SCALE

NOTES:

1. SECURE DRIVE-FIT GALVANIZED CAP TO POST WITH 1/4" ROUND-HEAD RIVET
2. STEEL BANDS AT TENSION BARS SHALL BE 1/8"X1" MINIMUM SPACED AT MAXIMUM 16".
3. CORNER POST USED WHERE HORIZONTAL FENCE DEFLECTION GREATER THAN 15°
4. SLOPE POSTS USED AT GRADE CHANGES GREATER THAN 5%.
5. GATES WITH FABRIC 7-FEET OR MORE IN HEIGHT SHALL HAVE A HORIZONTAL STIFFENER.

REGISTERED PROFESSIONAL ENGINEER
BENG KESHIAN, JR.
35971
6-30-06
CIVIL
STATE OF CALIFORNIA

SOURCE:
EARTH TECH INC. 60% DESIGN SUBMITTAL, REMEDIAL DESIGN SHALLOW GROUNDWATER UNIT REMEDY, IRP SITE 24, DECEMBER 2003, NAVAL FACILITIES ENGINEERING COMMAND CONTRACT N6272-94-D-0048.

Underground Service Alert
Call:TOll FREE
1-800
422-4133
TWO WORKING DAYS BEFORE YOU DIG

NO.	DATE	APPR.	REVISION
A	1/04		90% DESIGN SUBMITTAL
B	10/04		100% DESIGN
C	2/05		FINAL 100% DESIGN, ISSUED FOR CONSTRUCTION

DEPARTMENT OF THE NAVY
SOUTHWEST DIVISION
San Diego California

WESTON SOLUTIONS
Walnut Creek California

CHECKED	DATE	CLIENT APPROVALS	DATE
DES. ENG			
PROJ. ENG			
PROJ. MGR			
APPROVED			
APPROVED		ISSUED FOR	DATE

FENCE DETAILS

REMEDIAL DESIGN SHALLOW GROUNDWATER UNIT REMEDY

DRAWN	DATE	DWG. NO.	REV. NO.
D.C.H.	JANUARY 2004	C-12	C
SCALE	AS NOTED		

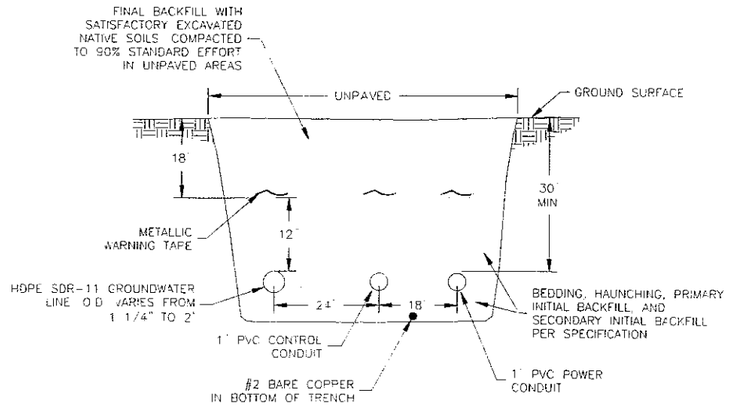

TYPICAL WELL LATERAL TRENCH SECTION 1 C-1 | C-13

NOT TO SCALE

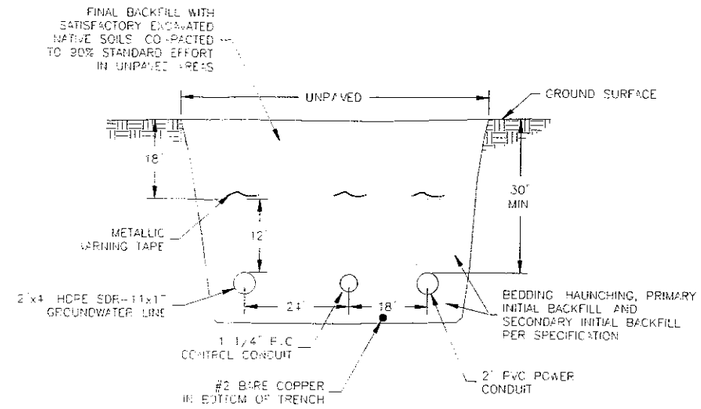

TYPICAL MAIN RUN MULTIPHASE TRENCH SECTION 2 C-1 | C-13

NOT TO SCALE

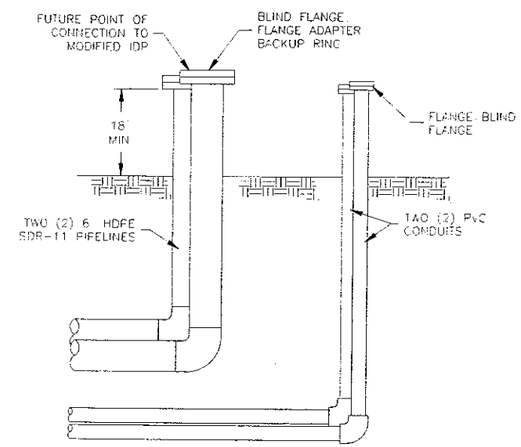

STUB UP AT MODIFIED IDP POINT OF CONNECTION 2 C-1 | C-13

NOT TO SCALE

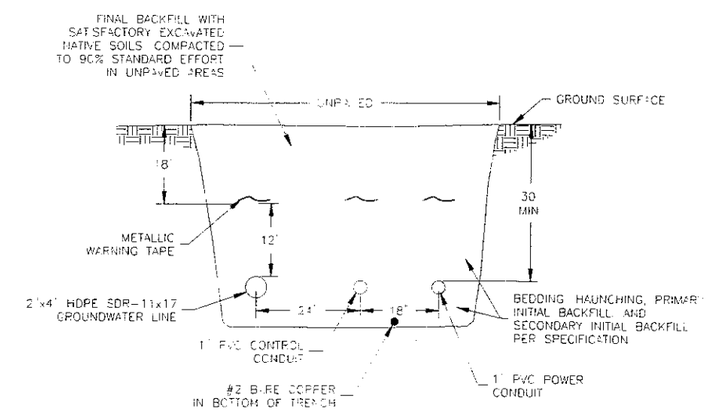

TYPICAL MULTIPHASE WELL LATERAL TRENCH SECTION 3 C-1 | C-13

NOT TO SCALE

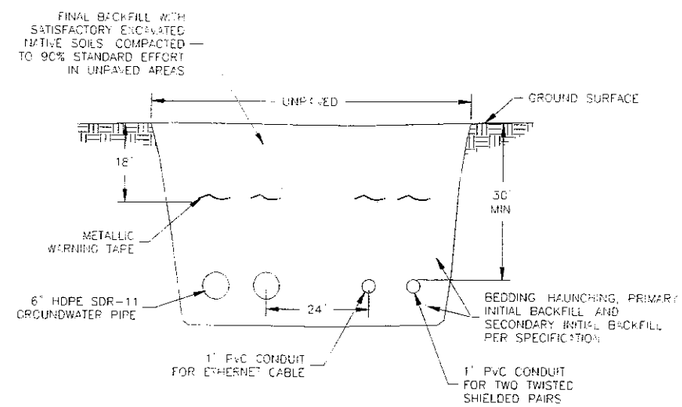

TYPICAL TRENCH SECTION BETWEEN SGU COMPOUND AND MODIFIED IDP A C-2 | C-13

NOT TO SCALE

REGISTERED PROFESSIONAL ENGINEER
BERG KESHIAN, JR.
35971
6-30-06
CIVIL
STATE OF CALIFORNIA

Underground Service Alert
Call: TOLL FREE
1-800
422-4133
TWO WORKING DAYS BEFORE YOU DIG

NO.	DATE	APPR	REVISION
A	1/04		90% DESIGN SUBMITTAL
B	10/04		100% DESIGN
C	2/05		FINAL 100% DESIGN/ISSUED FOR CONSTRUCTION

DEPARTMENT OF THE NAVY
SOUTHWEST DIVISION
San Diego California

WESTON SOLUTIONS
Walnut Creek California

CHECKED	DATE	CLIENT APPROVALS	DATE
DES. ENG			
PROJ. ENG			
PROJ. MGR			
APPROVED			
APPROVED		ISSUED FOR	DATE

DETAILS

REMEDIAL DESIGN SHALLOW GROUNDWATER UNIT REMEDY

DRAWN	DATE	DWG NO.	REV NO.
D.C.H.	JANUARY 2004	C-13	C
SCALE	W.O. NO.		
AS NOTED	12954002004001020	SHT - OF -	

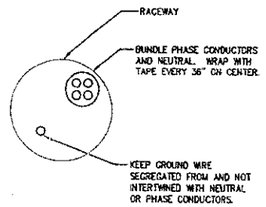

2 SEGREGATED GROUND WIRE INSTALLATION DETAIL
NOT TO SCALE

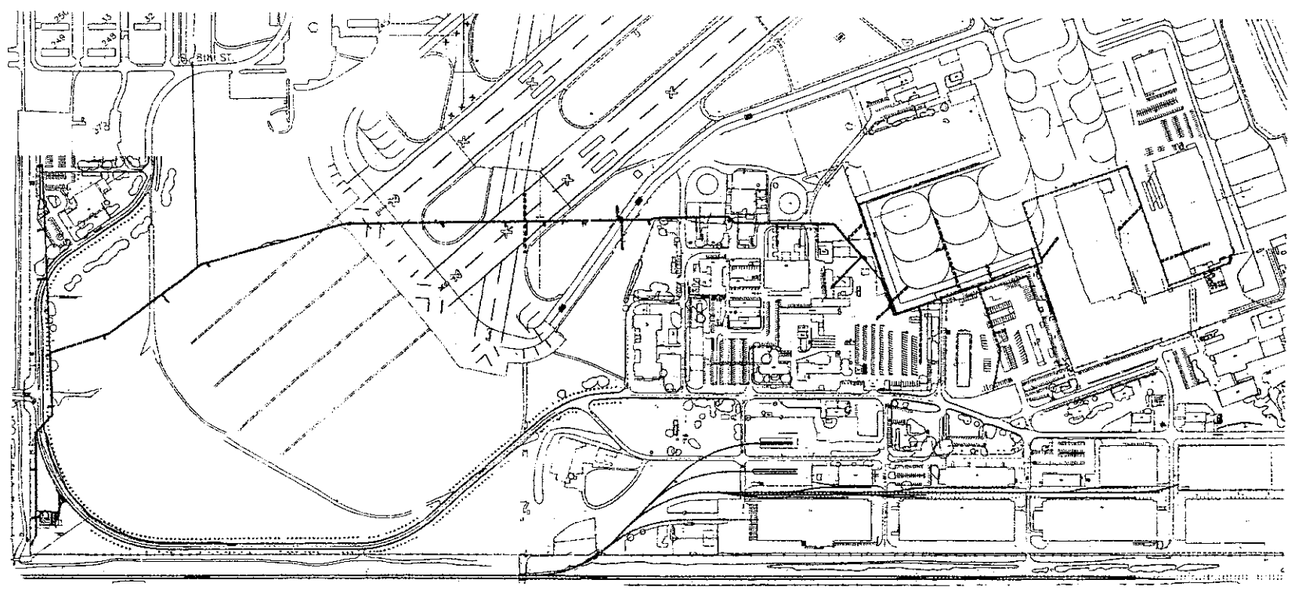

1 SITE PLAN
NOT TO SCALE

GENERAL NOTES

1. AT ALL TIMES THE CONTRACTOR WILL BE SOLELY AND COMPLETELY RESPONSIBLE FOR CONDITION OF JOB SITE, INCLUDING THE SAFETY OF ALL PERSONS AND PROPERTY AND FOR ALL NECESSARY INDEPENDENT ENGINEERING REVIEWS OF THESE CONDITIONS. THE ENGINEERS JOB SITE REVIEW IS NOT INTENDED TO INCLUDE REVIEW OF THE ADEQUACY OF THE CONTRACTORS SAFETY MEASURES.
2. THE CONTRACTOR SHALL MAKE AN EXAMINATION OF THE SITE. HE SHALL COMPARE THE SITE WITH THE DRAWINGS AND SPECIFICATIONS AND SATISFY HIMSELF AS TO CONDITIONS UNDER WHICH WORK IS TO BE PERFORMED. HE SHALL ASCERTAIN AND CHECK THE LOCATIONS OF ANY EXISTING STRUCTURES OR EQUIPMENT WHICH MAY AFFECT HIS WORK. NO ALLOWANCE SHALL SUBSEQUENTLY BE MADE IN HIS BEHALF FOR ANY EXPENSE TO WHICH HE MAY BE PUT DUE TO FAILURE OR NEGLECT ON HIS PART TO MAKE SUCH EXAMINATION.
3. ALL WORK SHALL BE COORDINATED WITH THE OWNER TO MAINTAIN CONTINUITY OF SERVICE AND MAXIMUM UTILIZATION OF THE OWNERS FACILITY. ALL WORK SHALL BE BID ON A "NORMAL TIME" BASIS WITH PREMIUM TIME IN ADDITION ONLY AS AUTHORIZED FOR CORE BORING OR OTHER WORK WHICH WILL BE NOISY DIRTY OR OTHERWISE OBSTRUCT THE WORK PROCESS.
4. THE CURRENT ISSUE OF ALL NFPA, CEC, CBC, UBC, UFC, ANSI, OSHA, ASTM, NEMA, AND OTHER NATIONALLY PUBLISHED CODES OR STANDARDS SHALL APPLY TO THIS WORK WHETHER ADOPTED BY LOCAL AGENCIES OR NOT. THE MOST STRINGENT CODES SHALL APPLY.
5. NOTHING IN THE DRAWINGS OR SPECIFICATIONS INTENDED TO ALLOW A VIOLATION OF ELECTRICAL WORKING SPACE AROUND ELECTRICAL EQUIPMENT. A 30"W MIN X 48"D X 6'-6"H SPACE SHALL BE CLEAR TO THE FLOOR IN FRONT OF ALL ELECTRICAL PANELS, CONTROLS OR ITEMS THAT REQUIRE MAINTENANCE OR ACCESS WHILE ENERGIZED. ANY DEVIATION FROM THIS MINIMUM SHALL BE APPROVED, IN WRITING, BY THE ENGINEER. THE CONTRACTOR SHALL RELOCATE ANY EQUIPMENT IN VIOLATION OF THE ELECTRICAL CODE AT HIS OWN COST.
6. ALL CABLES, CONDUIT, PIPING OR EQUIPMENT LOCATIONS AND ELEVATIONS ARE APPROXIMATE. THE CONTRACTOR IS RESPONSIBLE FOR FIELD CHECKING AND MAKING ALL NECESSARY OFFSETS, AS REQUIRED, TO AVOID INTERFERENCES AND COORDINATE WITH OTHER TRADES.
7. IDENTIFY EACH CONDUCTOR BY SHRINK-ON INDELIBLY MARKED BRADY-TAGS AND EACH ELECTRICAL ITEM BY BLACK - WHITE - BLACK ENGRAVED SCREW-ON PLASTIC NAMEPLATE, LEGEND PER DRAWING.
8. ALL GROUND WIRES SHALL BE SEGREGATED FROM PHASE CONDUCTORS IN CONDUITS TO MINIMIZE GROUND LOOPS.
9. CONTRACTOR SHALL VERIFY THE CONDITION OF EXISTING PANELBOARD, DISCONNECT AND REMOVE ALL EXISTING UNUSED BRANCH CIRCUIT WIRING WHERE APPLICABLE. PANEL BOARD SHALL BE CLEANED (DUST-FREE) AND RESTORED TO AS-NEW CONDITION PRIOR TO INSTALLATION OF NEW WORK. PROVIDE NECESSARY HARDWARE AND ACCESSORIES AS REQUIRED.
10. THE OWNER RESERVES THE RIGHT TO MOVE EQUIPMENT CONNECTION POINTS 5 FEET FROM THE POINT SHOWN IN THESE DRAWINGS. CONFIRM EXACT LOCATION OF CONNECTION POINTS WITH EXACT MACHINES FURNISHED.
11. ALL BELOW GRADE SPLICES AND TAPS SHALL BE INSULATED WITH SCOTCHCAST 78-R RE-ENTERABLE SPLICE KITS.

SYMBOL LIST

- (A) RECESSED FLUORESCENT FIXTURE TYPE A - SEE FIXTURE SCHEDULE
- (B) FLUORESCENT FIXTURE TYPE B MOUNTED ON WALL AT +90" ABOVE FLOOR -- SEE FIXTURE SCHEDULE
- S — 1PST LIGHT SWITCH, 20A, 125/277V RATED, +48", LETTER DENOTES OUTLETS CONTROLLED
- S^M — MANUAL MOTOR STARTING SWITCH, HORSE POWER RATED WITH OVERLOADS
- JUNCTION BOX -- SIZE PER CODE
- 20A, 125V, 3W, SPECIFICATION GRADE, GROUNDED DUPLEX RECEPTACLE, +24" U.O.N.
- 20A, 125V, 3W, SPECIFICATION GRADE, GROUNDED DUPLEX RECEPTACLE, +48", GFI TYPE
- 20A, 125V, 3W, SPECIFICATION GRADE, GROUNDED DOUBLE DUPLEX RECEPTACLE, +24" U.O.N.
- 4"SQ X 2 1/8"D TELEPHONE/DATA J-BOX, +18" WITH 1" CONDUIT UP TO TRUSS SPACE
- (M) — MOTOR OUTLET, HORSEPOWER NOTED, COMPLETE WITH CONNECTIONS AND FLEX.
- 30' HIGH POLE MOUNTED FIXTURE, 250 WATT HPS
- (T) — TRANSFORMER, KVA AND VOLTAGE AS SHOWN IN CONNECTION DETAILS
- NON-FUSED DISCONNECT SWITCH, 30A, 3 POLE 480 VOLT NEMA 3R, OR AMP RATING NOTED.
- FUSED DISCONNECT SWITCH, 30A, 3 POLE 480 VOLT NEMA 3R OR AMP RATING NOTED.
- COMBINATION FUSIBLE SWITCH MOTOR STARTER, NEMA SIZE 1 OR AS NOTED, ENCLOSURE SHALL BE NEMA 12 WITH H-O-A SELECTOR SWITCH AND 120 VOLT 100VA CONTROL TRANSFORMER.
- CONDUIT SEAL AS REQUIRED FOR CLASSIFICATION LOCATION
- S/P/F — FUSED SWITCH - SIZE/POLE/FUSE NOTED
- T/P/F — CIRCUIT BREAKER -- TRIP/POLE/FRAME NOTED
- EXISTING CONDUIT
- CONDUIT EXPOSED ON WALL OR IN CEILING
- CONDUIT RUN UNDERGROUND
- HOMERUN TO PANEL BOARD OR OTHER TERMINATION POINT
- ANY BRANCH CIRCUIT CONDUIT SHALL BE MINIMUM 3/4"C - 2#12 UNLESS OTHERWISE NOTED OR INDICATED. FOR A GREATER NUMBER OF #12 WIRES: (= 3/4"C - 3#12) ETC. FOR WIRE SIZES OTHER THAN #12: (#8 = 3#8 IN CODE SIZE CONDUIT) ETC.
- HOT WIRES
- NEUTRAL
- ISOLATED GROUND
- BC — BARE COPPER
- C — CONDUIT
- (E) — EXISTING
- (N) — NEW
- (X) — REMOVE ITEM NOTED
- (ER) — EXISTING TO REMAIN
- (R) — RELOCATED AND RECONNECTED DEVICE
- U.O.N. — UNLESS OTHERWISE NOTED
- WP — WEATHERPROOF
- (1) — SHEET NOTE
- 1/E1 — DETAIL 1, SHEET WHERE DETAIL IS DRAWN

INDEX OF ELECTRICAL DRAWINGS

SHEET NUMBER	DESCRIPTION
E1.0	ELECTRICAL SYMBOLS, NOTES, AND SITE LOCATIONS
E1.1	ELECTRICAL SINGLE LINE DIAGRAM SERVICE #1
E1.2	ELECTRICAL SINGLE LINE DIAGRAM SERVICE #2
E1.3	ELECTRICAL DETAILS
E1.4	ELECTRICAL DETAILS
E1.5	ELECTRICAL DETAILS
E2.0	ELECTRICAL SITE PLAN - TRANSFORMER #1 AREA
E2.1	ELECTRICAL SITE PLAN - TRANSFORMER #1 AREA
E2.2	ELECTRICAL SITE PLAN - TRANSFORMER #1 AREA
E2.3	ELECTRICAL SITE PLAN - TRANSFORMER #1 AREA
E2.4	ELECTRICAL SITE PLAN - TRANSFORMER #1 AREA
E2.5	ELECTRICAL SITE PLAN - TRANSFORMER #1 AREA
E2.6	ELECTRICAL SITE PLAN - TRANSFORMER #1 AREA
E2.7	ELECTRICAL SITE PLAN - TRANSFORMER #1 AREA
E2.8	ELECTRICAL SITE PLAN - TRANSFORMER #1 AREA
E2.9	ELECTRICAL SITE PLAN - TRANSFORMER #1 AREA
E3.0	ELECTRICAL SITE PLAN - TRANSFORMER #2 AREA
E3.1	ELECTRICAL SITE PLAN - TRANSFORMER #2 AREA
E3.2	ELECTRICAL SITE PLAN - TRANSFORMER #2 AREA
E3.3	ELECTRICAL SITE PLAN - TRANSFORMER #2 AREA
E3.4	ELECTRICAL SITE PLAN - TRANSFORMER #2 AREA
E3.5	ELECTRICAL SITE PLAN - TRANSFORMER #2 AREA
E3.6	ELECTRICAL SITE PLAN - TRANSFORMER #2 AREA
E3.7	ELECTRICAL SITE PLAN - TRANSFORMER #2 AREA
E4.0	ELECTRICAL SITE PLAN - TRANSFORMER #2 AREA
E4.1	ELECTRICAL SITE PLAN - TRANSFORMER #2 AREA
E4.2	ELECTRICAL SITE PLAN - TRANSFORMER #2 AREA

Underground Service Alert
Call:TOH FREE
1-800
422-4133

NO.	DATE	APPR.	REVISION
0	2/9/05	ER	FINAL 100% DESIGN/ISSUED FOR CONSTRUCTION
0	11/3/04	ER	REVISION C 100% DRAFT DESIGN SUBMITTAL
0	10/15/04	ER	100% DESIGN
0	5/10/04	ER	REVISION B 90% DESIGN REVIEW
0	2/16/04	ER	REVISION A 90% DESIGN SUBMITTAL

DEPARTMENT OF THE NAVY
SOUTHWEST DIVISION
San Diego California

WESTON SOLUTIONS
Walnut Creek California

CHECKED — DATE — CLIENT APPROVALS — DATE
DES. ENG. —
PROJ. ENG. —
PROJ. MGR. —
APPROVED —
APPROVED — ISSUED FOR — DATE

REGISTERED PROFESSIONAL ENGINEER EDWARD A. RITO No. E 8294 Exp. 1-31-05 ELECTRICAL STATE OF CALIFORNIA

ELECTRICAL SYMBOLS, NOTES AND SITE LOCATIONS
REMEDIAL DESIGN SHALLOW GROUNDWATER UNIT REMEDY

DRAWN	DATE	DWG. NO.	REV. NO.
ER/RY	JANUARY, 14 2004	E-1.0	A
SCALE: AS SHOWN	W.O. NO.: 12984002204001020/JRA 4129	SHT. — OF —	

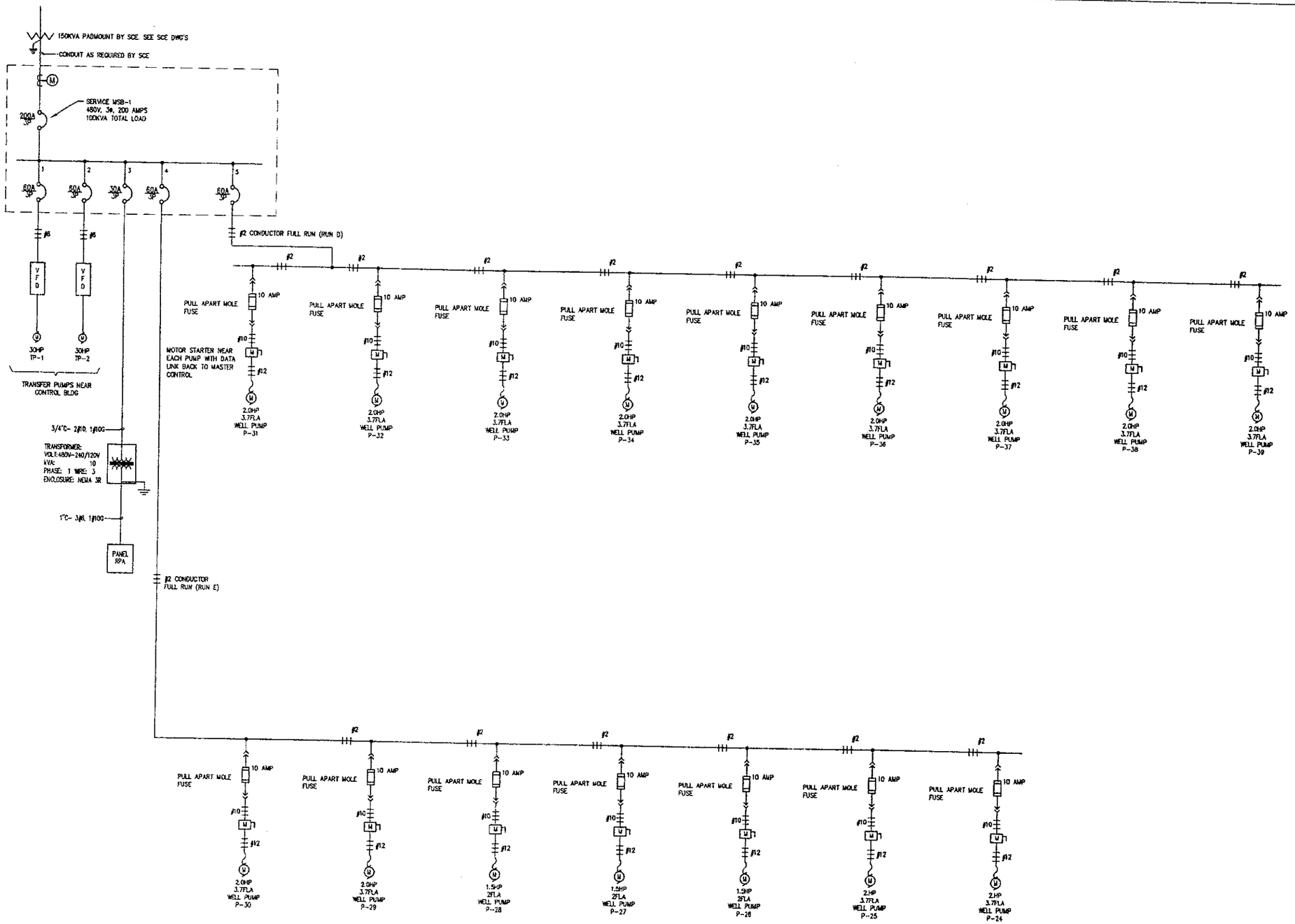

1 SINGLE LINE DIAGRAM - SERVICE #1
NOT TO SCALE

Underground Service Alert
Call:TOll FREE
1-800
422-4133

NO.	DATE	APPR.	REVISION
0	2/9/05	ER	FINAL 100% DESIGN/ISSUED FOR CONSTRUCTION
0	11/3/04	ER	REVISION C 100% DRAFT DESIGN SUBMITTAL
0	10/15/04	ER	100% DESIGN
0	5/10/04	ER	REVISION B 90% DESIGN REVIEW
0	2/18/04	ER	REVISION A 90% DESIGN SUBMITTAL

DEPARTMENT OF THE NAVY
SOUTHWEST DIVISION
San Diego California

WESTON SOLUTIONS

CHECKED – DATE
DES. ENG. –
PROJ. ENG. –
PROJ. MGR. –
APPROVED –
APPROVED –

CLIENT APPROVALS DATE
ISSUED FOR DATE

REGISTERED PROFESSIONAL ENGINEER EDWARD A. RITO No. E 8284 Exp. 9-30-06 ELECTRICAL STATE OF CALIFORNIA

ELECTRICAL SINGLE LINE DIAGRAM
SERVICE #1
REMEDIAL DESIGN SHALLOW GROUNDWATER UNIT REMEDY

DRAWN ER/RY
DATE JANUARY, 14 2004
DWG. NO. E-1.1
REV. NO. A
SCALE AS SHOWN
W.O. NO. 12954002004001020/JRA 4120
SHT. – OF –

SHEET NOTES

1. BUCK-BOOST TRANSFORMER SHALL BE RATED FOR A 24V BOOST ON A 480V SYSTEM AND SHALL BE CONNECTED OPEN DELTA. UNIT SHALL BE HAMMOND POWER SOLUTIONS #01C0 DTCB, RATED 18KVA.

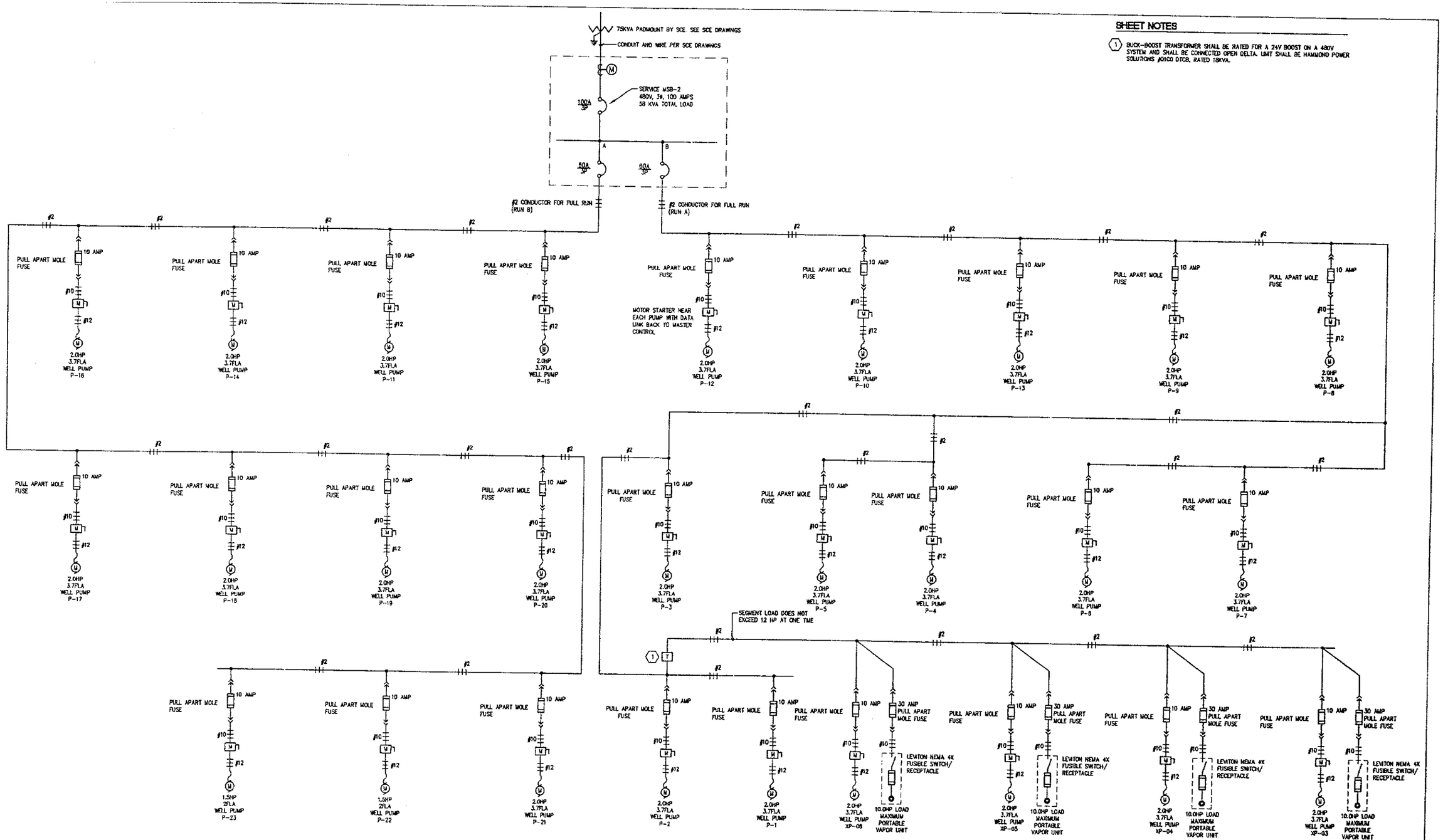

1 SINGLE LINE DIAGRAM - SERVICE #2
NOT TO SCALE

Underground Service Alert
Call:TOLL FREE
1-800
422-4133

NO.	DATE	APPR.	REVISION
0	2/9/05	ER	FINAL 100% DESIGN/ISSUED FOR CONSTRUCTION
0	11/3/04	ER	REVISION C 100% DRAFT DESIGN SUBMITTAL
0	10/15/04	ER	100% DESIGN
0	5/10/04	ER	REVISION B 90% DESIGN REVIEW
0	2/16/04	ER	REVISION A 90% DESIGN SUBMITTAL

DEPARTMENT OF THE NAVY
SOUTHWEST DIVISION
San Diego California

WESTON SOLUTIONS

CHECKED – DATE
DES. ENG. –
PROJ. ENG. –
PROJ. MGR. –
APPROVED –
APPROVED –
CLIENT APPROVALS DATE
ISSUED FOR DATE

REGISTERED PROFESSIONAL ENGINEER EDWARD A. RITO No. E 8204 Exp. 8-30-06 ELECTRICAL STATE OF CALIFORNIA

ELECTRICAL SINGLE LINE DIAGRAM
SERVICE #2
REMEDIAL DESIGN SHALLOW GROUNDWATER UNIT REMEDY

DRAWN ER/RY
DATE JANUARY, 14 2004
DWG. NO. E-1.2
REV. NO. A
SCALE AS SHOWN
W.O. NO. 12954002004001020/JRR 4120
SHT. – OF –

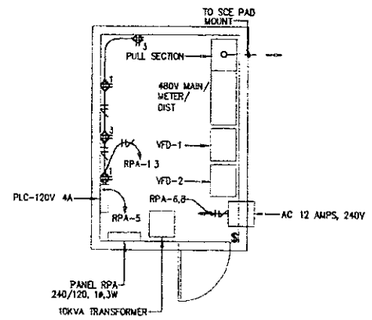

1 8' X 12' CONTROL ROOM
SCALE: 1/4" = 1'-0"

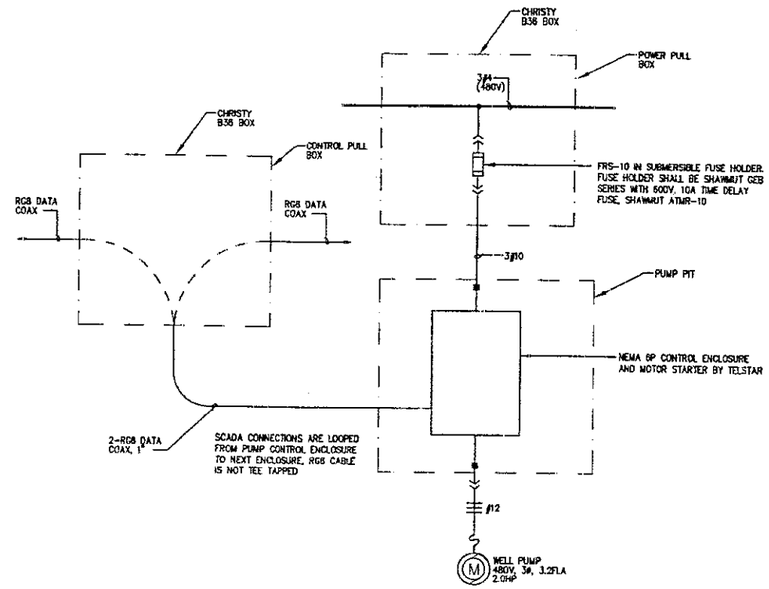

2 TYPICAL PUMP SINGLE LINE DIAGRAM
SCALE: NONE

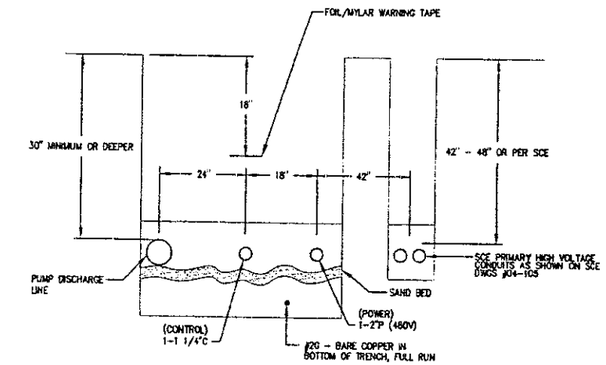

3 TYPICAL TRENCH DETAIL
SCALE: NONE

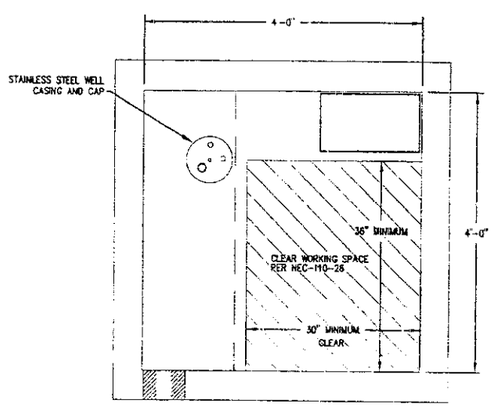

4 TYPICAL PUMP PIT LAYOUT
SCALE: NONE

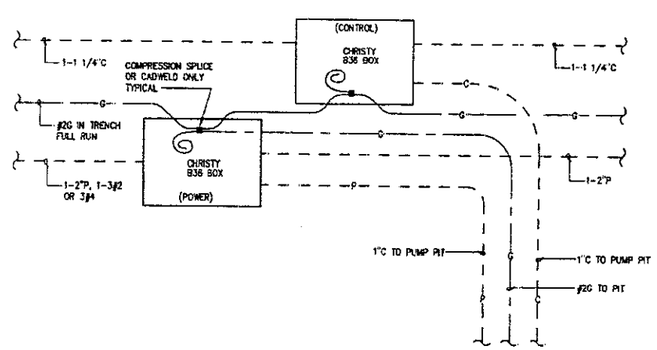

5 TYPICAL PULL BOX ARANGEMENT
SCALE: NONE

PANEL RPA

VOLTS: 240/120
PHASE: 1
WIRE: 3
BUSSING: 100A
POLES: 30

MAIN BRKR: 30/2
FEEDER: SEE SCHEDULE
CONDUIT: SEE SCHEDULE
MOUNTING: SURFACE
AIC RATING: 10,000

LOAD DESCRIPTION	TYPE	A	B	BRKR	CKT.	CKT.	BRKR	A	B	TYPE	LOAD DESCRIPTION
RECEPTACLES	R	1.20		20/1	1	2	20/1	0.40		L	ROOM LIGHTS
RECEPTACLES	R		1.20	20/1	3	4	20/1		0.50	L	YARD LIGHTS
PLC	R	0.50		20/1	5	6	20/2	1.50		H	ROOM A/C UNIT
SPARE				20/1	7	8			1.50	H	ROOM A/C UNIT
SPARE				20/1	9	10					SPARE
SPARE				20/1	11	12	20/1				SPARE
SPARE				20/1	13	14	20/1				SPARE
SPARE				20/1	15	16	20/1				SPARE
SPARE				20/1	17	18	20/1				SPARE
SPARE				20/1	19	20	20/1				SPARE
SPARE				20/1	21	22	20/1				SPARE
SPARE				20/1	23	24	20/1				SPARE
SPARE				20/1	25	26	20/1				SPARE
SPARE				20/1	27	28	20/1				SPARE
SPARE				20/1	29	30	20/1				SPARE
		1.70	1.20					1.90	2.00		

		CONN KVA	DEMAND FACTOR	DEMAND KVA
TYPE "M":	NON-CONTINUOUS / MISC. LOADS	2.00	100%	2.00
TYPE "L":	LIGHTING / CONTINUOUS LOADS	2.00	125%	1.12
TYPE "R":	RECEPTACLES (FIRST 10KVA)	2.90	100%	2.90
TYPE "R":	RECEPTACLES (OVER 10KVA)	0.00	50%	0.00
TYPE "H":	HVAC / MECHANICAL LOADS	3.00	100%	3.00
	TOTALS	9.90		7.02

PHASE A: 3.82 KVA
PHASE B: 3.20 KVA

33.77 AMPS

Underground Service Alert
Call:TOLL FREE
1-800
422-4133

NO.	DATE	APPR.	REVISION
0	2/7/05	ER	FINAL 100% DESIGN/ISSUED FOR CONSTRUCTION
0	01/3/04	ER	REVISION C 100% DRAFT DESIGN SUBMITTAL
0	10/15/03	ER	100% DESIGN
0	5/30/03	ER	REVISION B 90% DESIGN REVIEW
0	2/18/03	ER	REVISION A 90% DESIGN SUBMITTAL

DEPARTMENT OF THE NAVY
SOUTHWEST DIVISION
San Diego California

WESTON SOLUTIONS

CHECKED | DATE | CLIENT APPROVALS | DATE
DES. ENG.
PROJ. ENG.
PROJ. MGR.
APPROVED
APPROVED | ISSUED FOR | DATE

REGISTERED PROFESSIONAL ENGINEER EDWARD A. RITO No. E 9284 Exp. 2-28-05 ELECTRICAL STATE OF CALIFORNIA

ELECTRICAL DETAILS

REMEDIAL DESIGN SHALLOW GROUNDWATER UNIT REMEDY

DRAWN: ER/RY
DATE: JANUARY, 14 2004
DWG. NO.: E-1.3
REV. NO.: A
SCALE: AS SHOWN
W.O. NO.: 12954002004001029/SRA 4126
SHT. — OF —

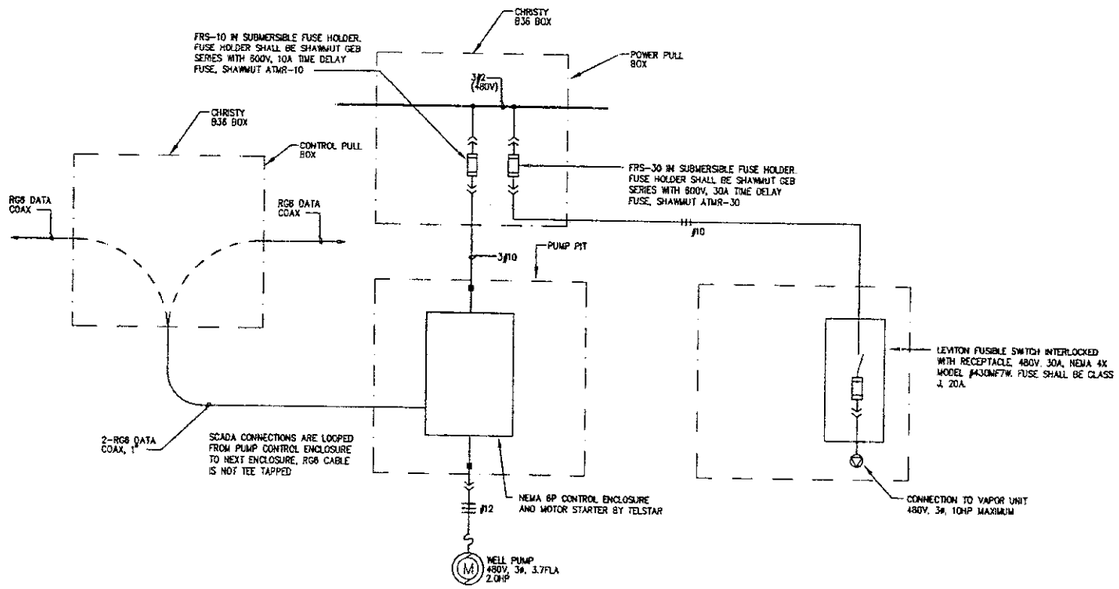

1 TYPICAL MULTI PHASE PUMP SINGLE LINE DIAGRAM
SCALE: NONE

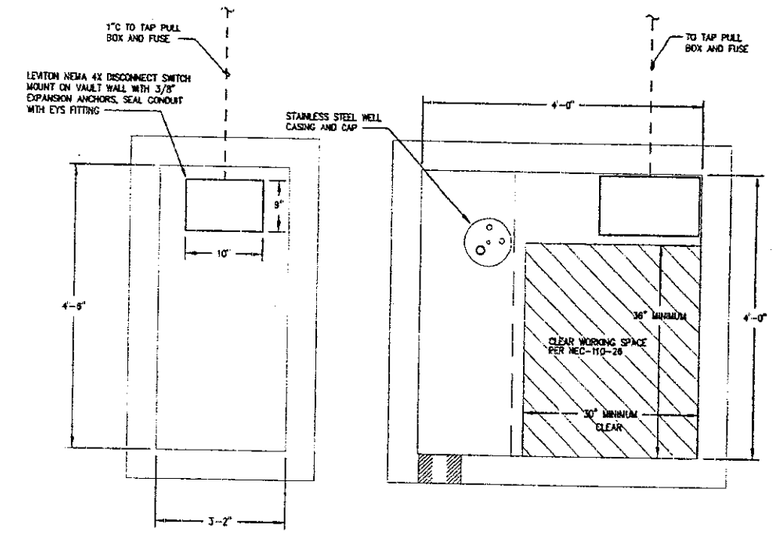

2 TYPICAL MULTI PHASE PUMP PIT LAYOUT
SCALE: NONE

Underground Service Alert
Call:TOll FREE
1-800
422-4133

NO.	DATE	APPR.	REVISION
0	2/9/05	ER	FINAL 100% DESIGN/ISSUED FOR CONSTRUCTION
0	11/3/04	ER	REVISION C 100% DRAFT DESIGN SUBMITTAL
0	10/15/04	ER	100% DESIGN
0	5/10/04	ER	REVISION B 90% DESIGN REVIEW
0	2/18/04	ER	REVISION A 90% DESIGN SUBMITTAL

DEPARTMENT OF THE NAVY
SOUTHWEST DIVISION
San Diego California

WESTON SOLUTIONS
Walnut Creek California

CHECKED	DATE	CLIENT APPROVALS	DATE
DES. ENG.			
PROJ. ENG.			
PROJ. MGR.			
APPROVED			
APPROVED		ISSUED FOR	DATE

REGISTERED PROFESSIONAL ENGINEER EDWARD A. RITO No. E 8294 Exp. 9-30-06 ELECTRICAL STATE OF CALIFORNIA

ELECTRICAL DETAILS

REMEDIAL DESIGN SHALLOW GROUNDWATER UNIT REMEDY

DRAWN	DATE	DWG. NO.	REV. NO.
ER/RY	JANUARY, 14 2004	E-1.4	A
SCALE: AS SHOWN	W.O. NO. 12954002004001020/JRA 4120	SHT. - OF -	

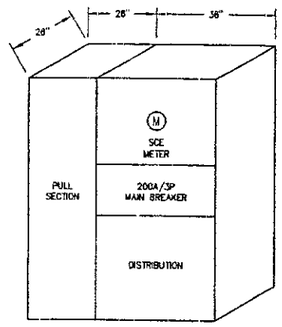

1 MSB #1 (NEMA 1)

NOT TO SCALE 200A, 480Y277V, 3ø 4W

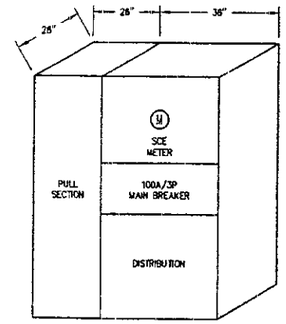

2 MSB #2 (NEMA 3R)

NOT TO SCALE 100A, 480Y277V 3ø, 4W

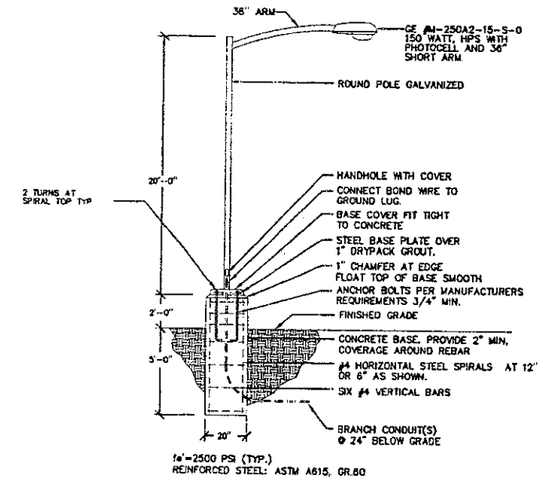

3 FIXTURE POLE BASE DETAIL

SCALE: NONE

Underground Service Alert
Call:TOLL FREE
1-800
422-4133

NO.	DATE	APPR.	REVISION
0	2/3/05	ER	FINAL 100% DESIGN/ISSUED FOR CONSTRUCTION
0	11/3/04	ER	REVISION C 100% DRAFT DESIGN SUBMITTAL
0	10/15/04	ER	100% DESIGN
0	5/10/04	ER	REVISION B 90% DESIGN REVIEW
0	2/18/04	ER	REVISION A 90% DESIGN SUBMITTAL

DEPARTMENT OF THE NAVY
SOUTHWEST DIVISION
San Diego California

WESTON SOLUTIONS
Walnut Creek California

CHECKED	DATE	CLIENT APPROVALS	DATE
DES. ENG.			
PROJ. ENG.			
PROJ. MGR.			
APPROVED			
APPROVED		ISSUED FOR	DATE

REGISTERED PROFESSIONAL ENGINEER
EDWARD A. RITO
No. E 8294
Exp. 9-30-06
ELECTRICAL
STATE OF CALIFORNIA

ELECTRICAL DETAILS

REMEDIAL DESIGN SHALLOW GROUNDWATER UNIT REMEDY

DRAWN	DATE	DWG. NO.	REV. NO.
ER/RY	JANUARY, 14 2004	E-1.5	A
SCALE	W.O. NO.	SHT.	OF
AS SHOWN	12954002004001020/JRA 4120		

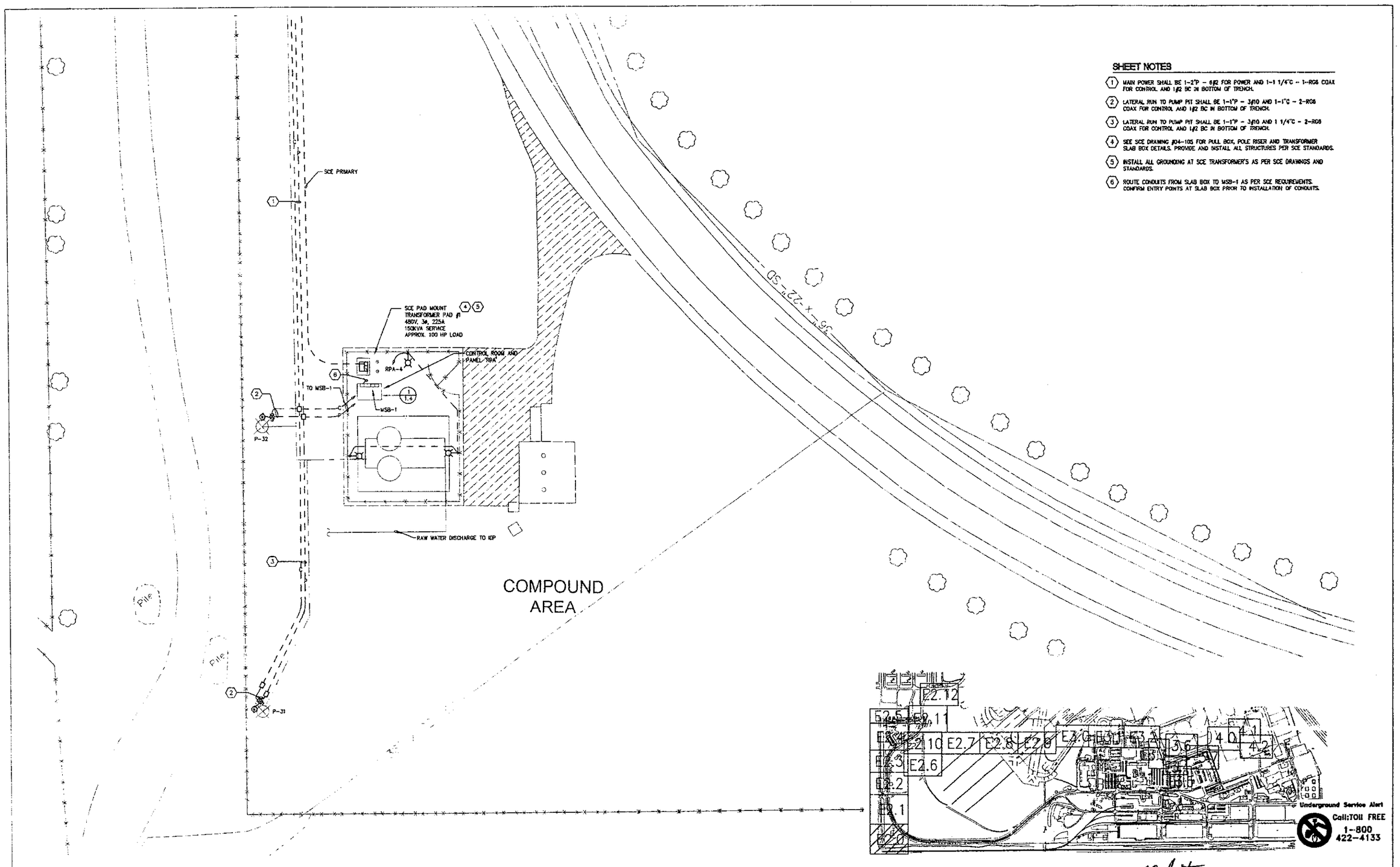

SHEET NOTES

1. MAIN POWER SHALL BE 1-2"P - 6#2 FOR POWER AND 1-1 1/4"C - 1-RG6 COAX FOR CONTROL AND 1#2 BC IN BOTTOM OF TRENCH.
2. LATERAL RUN TO PUMP PIT SHALL BE 1-1"P - 3#10 AND 1-1"C - 2-RG6 COAX FOR CONTROL AND 1#2 BC IN BOTTOM OF TRENCH.
3. LATERAL RUN TO PUMP PIT SHALL BE 1-1"P - 3#10 AND 1 1/4"C - 2-RG6 COAX FOR CONTROL AND 1#2 BC IN BOTTOM OF TRENCH.
4. SEE SCE DRAWING #04-105 FOR PULL BOX, POLE RISER AND TRANSFORMER SLAB BOX DETAILS. PROVIDE AND INSTALL ALL STRUCTURES PER SCE STANDARDS.
5. INSTALL ALL GROUNDING AT SCE TRANSFORMER'S AS PER SCE DRAWINGS AND STANDARDS.
6. ROUTE CONDUITS FROM SLAB BOX TO MSB-1 AS PER SCE REQUIREMENTS. CONFIRM ENTRY POINTS AT SLAB BOX PRIOR TO INSTALLATION OF CONDUITS.

NO.	DATE	APPR.	REVISION
0	2/9/05	ER	FINAL 100% DESIGN/ISSUED FOR CONSTRUCTION
0	11/3/04	ER	REVISION C 100% DRAFT DESIGN SUBMITTAL
0	10/13/04	ER	100% DESIGN
0	5/10/04	ER	REVISION B 90% DESIGN REVIEW
0	2/16/04	ER	REVISION A 90% DESIGN SUBMITTAL

DEPARTMENT OF THE NAVY
SOUTHWEST DIVISION
San Diego California

WESTON SOLUTIONS
Walnut Creek California

CHECKED	-	DATE	CLIENT APPROVALS	DATE
DES. ENG.	-	-		
PROJ. ENG.	-	-		
PROJ. MGR.	-	-		
APPROVED	-	-		
APPROVED	-	-	ISSUED FOR	DATE

REGISTERED PROFESSIONAL ENGINEER
EDWARD A. RITO
No. E 6294
Exp. 8-30-06
ELECTRICAL
STATE OF CALIFORNIA

ELECTRICAL SITE PLAN -
TRANSFORMER #1 AREA
REMEDIAL DESIGN SHALLOW GROUNDWATER UNIT REMEDY

DRAWN	DATE	DWG. NO.	REV. NO.
ER/RY	JANUARY, 14 2004	E-2.0	A
SCALE 1"=20'	W.O. NO. 1295400200400102D/JNA 4120	SHT. - OF -	

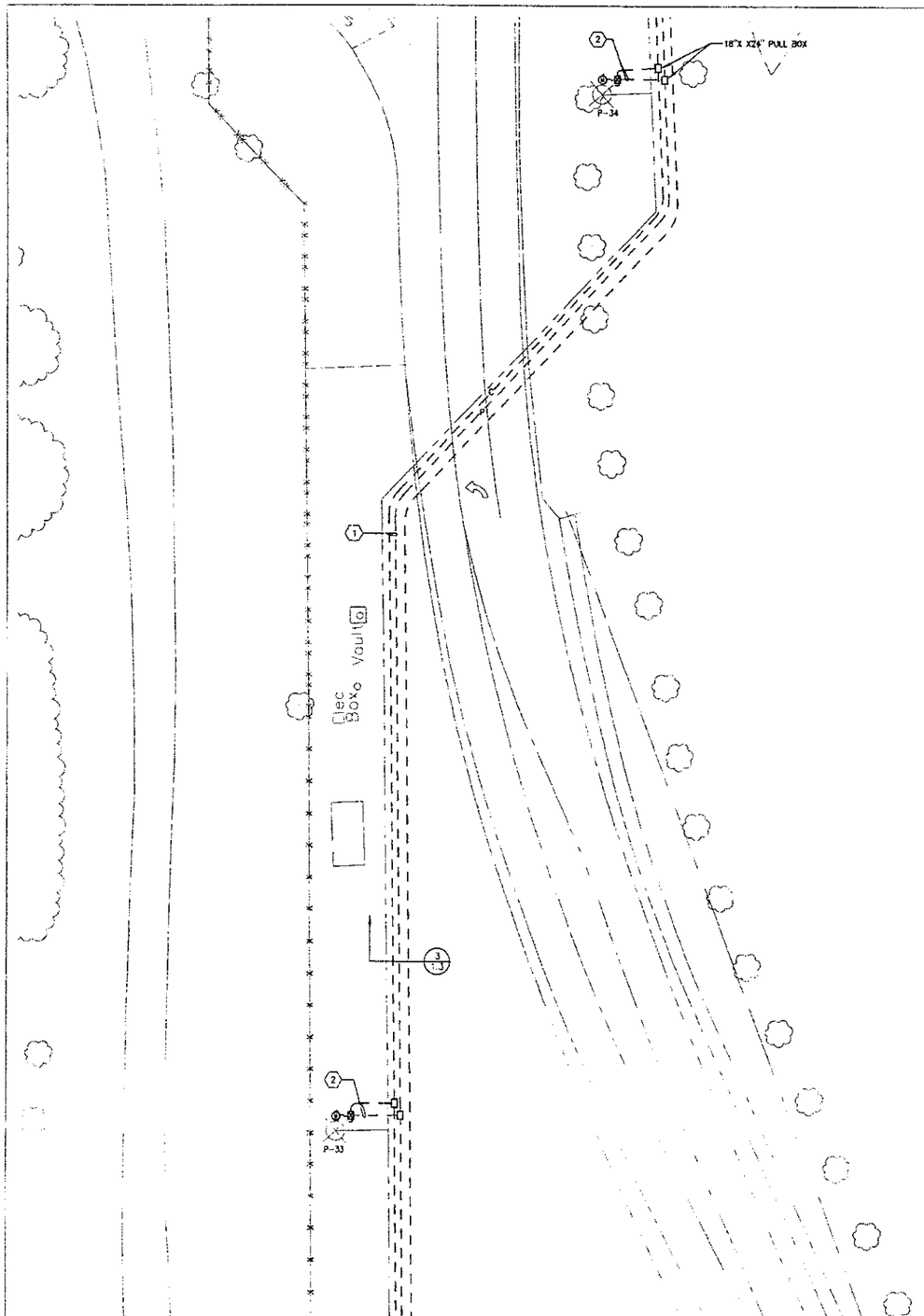

SHEET NOTES

1. MAIN POWER SHALL BE 1-2"P - 8#2 FOR POWER AND 1-1 1/4"C - 1-RG6 COAX FOR CONTROL AND 1#2 BC IN BOTTOM OF TRENCH.
2. LATERAL RUN TO PUMP PIT SHALL BE 1-1"P - 3#10 AND 1-1"C - 2-RG6 COAX FOR CONTROL AND 1#2 BC IN BOTTOM OF TRENCH.

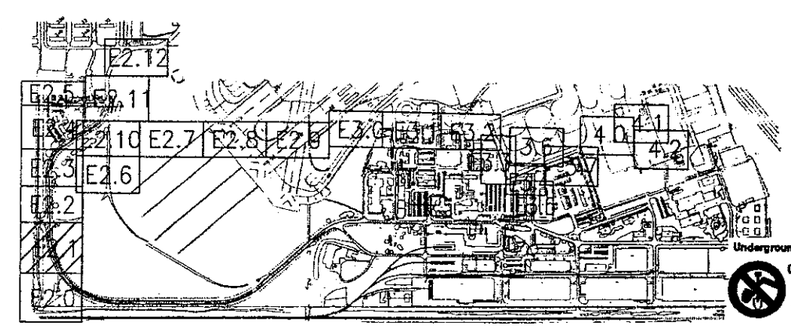

Underground Service Alert
Call:TOLL FREE
1-800
422-4133

NO.	DATE	APPR.	REVISION	NO.	DATE	APPR.	REVISION
				0	2/9/05	ER	FINAL 100% DESIGN/ISSUED FOR CONSTRUCTION
				0	11/3/04	ER	REVISION C 100% DRAFT DESIGN SUBMITTAL
				0	10/15/04	ER	100% DESIGN
				0	5/10/04	ER	REVISION B 90% DESIGN REVIEW
				0	2/19/04	ER	REVISION A 90% DESIGN SUBMITTAL

DEPARTMENT OF THE NAVY
SOUTHWEST DIVISION
San Diego California

WESTON SOLUTIONS
Walnut Creek California

CHECKED	–	–	
DES. ENG.	–	–	
PROJ. ENG.	–	–	
PROJ. MGR.	–	–	
APPROVED	–	–	
APPROVED	–	–	

CLIENT APPROVALS | DATE | ISSUED FOR | DATE

REGISTERED PROFESSIONAL ENGINEER
EDWARD A. RITO
No. E 8384
Exp. 9-30-05
ELECTRICAL
STATE OF CALIFORNIA

ELECTRICAL SITE PLAN –
TRANSFORMER #1 AREA
REMEDIAL DESIGN SHALLOW GROUNDWATER UNIT REMEDY

DRAWN	DATE	DWG. NO.	REV. NO.
ER/RY	JANUARY, 14 2004	E-2.1	A
SCALE 1"=20'	W.O. NO. 1295400200400102D/#A 4120	SHT. – OF –	

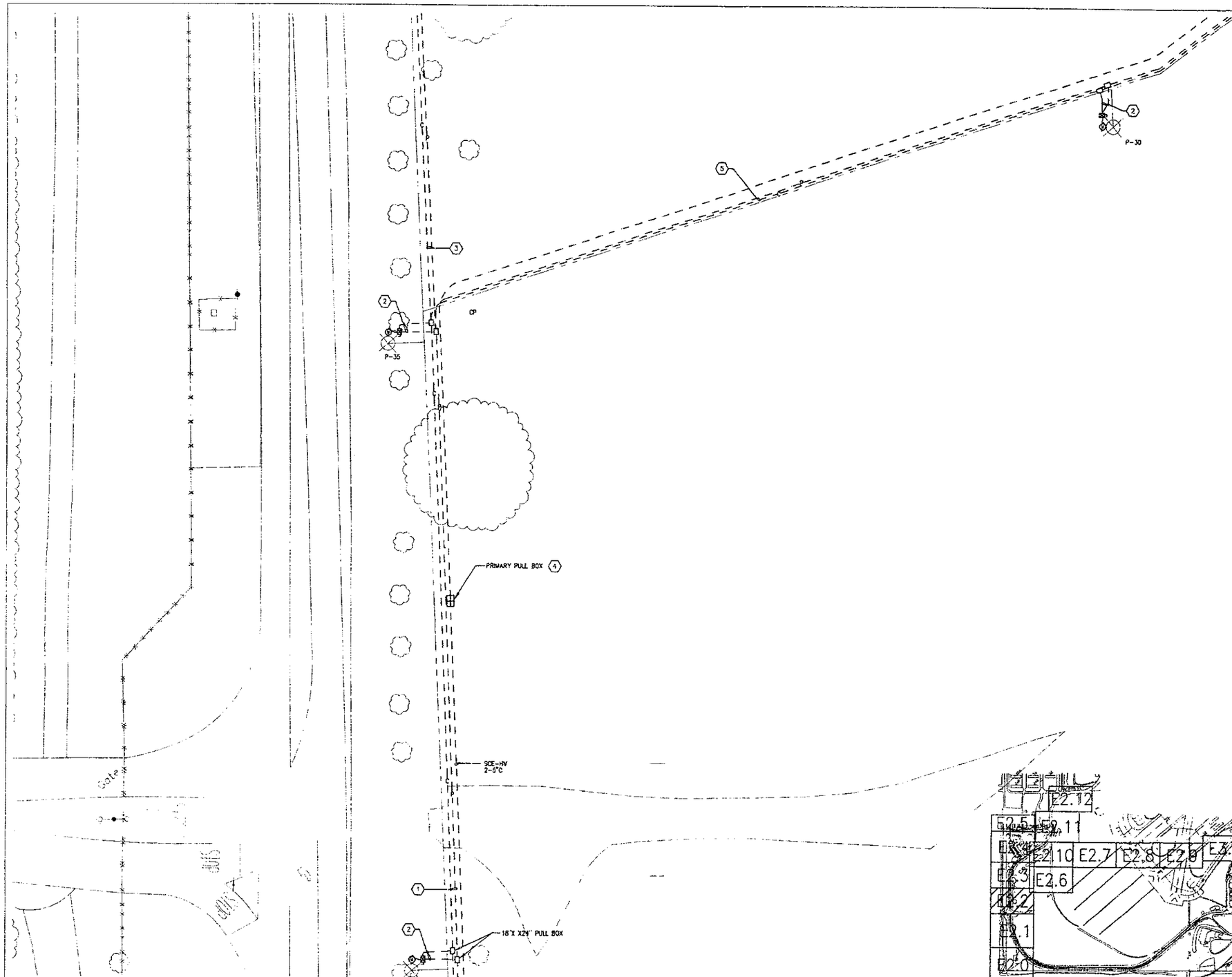

SHEET NOTES

1. MAIN POWER SHALL BE 1-2"P - 5#2 FOR POWER AND 1-1 1/4"C -- 1-RG6 COAX FOR CONTROL AND 1#2 BC IN BOTTOM OF TRENCH.
2. LATERAL RUN TO PUMP PIT SHALL BE 1-1"P - 3#10 AND 1-1"C -- 2-RG6 COAX FOR CONTROL AND 1#2 BC IN BOTTOM OF TRENCH.
3. MAIN POWER SHALL BE 1-2"P - 3#2 FOR POWER AND 1-1 1/4"C - 2-RG6 COAX FOR CONTROL AND 1#2 BC IN BOTTOM OF TRENCH.
4. SEE SCE DRAWING #04-105 FOR PULL BOX, POLE RISER AND TRANSFORMER SLAB BOX DETAILS. PROVIDE AND INSTALL ALL STRUCTURES PER SCE STANDARDS.
5. MAIN POWER SHALL BE 1-2"P - 3#2 FOR POWER AND 1-1 1/4"C -- 1-RG6 COAX FOR CONTROL AND 1#2 BC IN BOTTOM OF TRENCH.

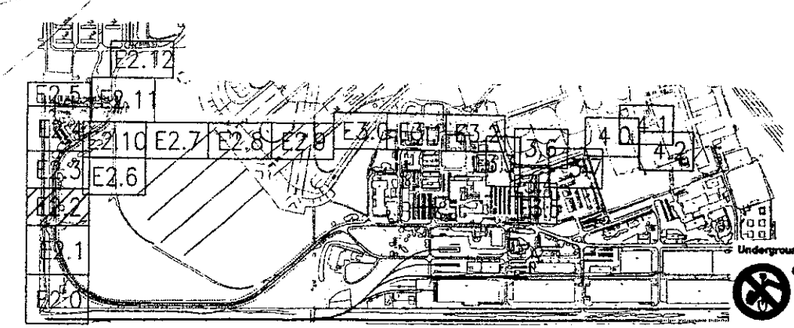

Underground Service Alert
Call:TOll FREE
1-800
422-4133

NO.	DATE	APPR.	REVISION	NO.	DATE	APPR.	REVISION
				0	2/9/05	ER	FINAL 100% DESIGN/ISSUED FOR CONSTRUCTION
				0	11/3/04	ER	REVISION C 100% DRAFT DESIGN SUBMITTAL
				0	10/15/04	ER	100% DESIGN
				0	5/18/04	ER	REVISION B 50% DESIGN REVIEW
				0	2/18/04	ER	REVISION A 90% DESIGN SUBMITTAL

DEPARTMENT OF THE NAVY
SOUTHWEST DIVISION
San Diego California

WESTON SOLUTIONS
Walnut Creek California

CHECKED	DATE	CLIENT APPROVALS	DATE
DES. ENG.			
PROJ. ENG.			
PROJ. MGR.			
APPROVED			
APPROVED		ISSUED FOR	DATE

REGISTERED PROFESSIONAL ENGINEER
EDMUND L. RITO
No. E 10814
Exp. 6-30-05
ELECTRICAL
STATE OF CALIFORNIA

ELECTRICAL SITE PLAN -
TRANSFORMER #1 AREA
REMEDIAL DESIGN SHALLOW GROUNDWATER UNIT REMEDY

DRAWN ER/RY	DATE JANUARY, 14 2004	DWG. NO. E-2.2	REV. NO. A
SCALE 1"=20'	W.O. NO. 12054022004001020/SPA 4120	SHT. — OF —	

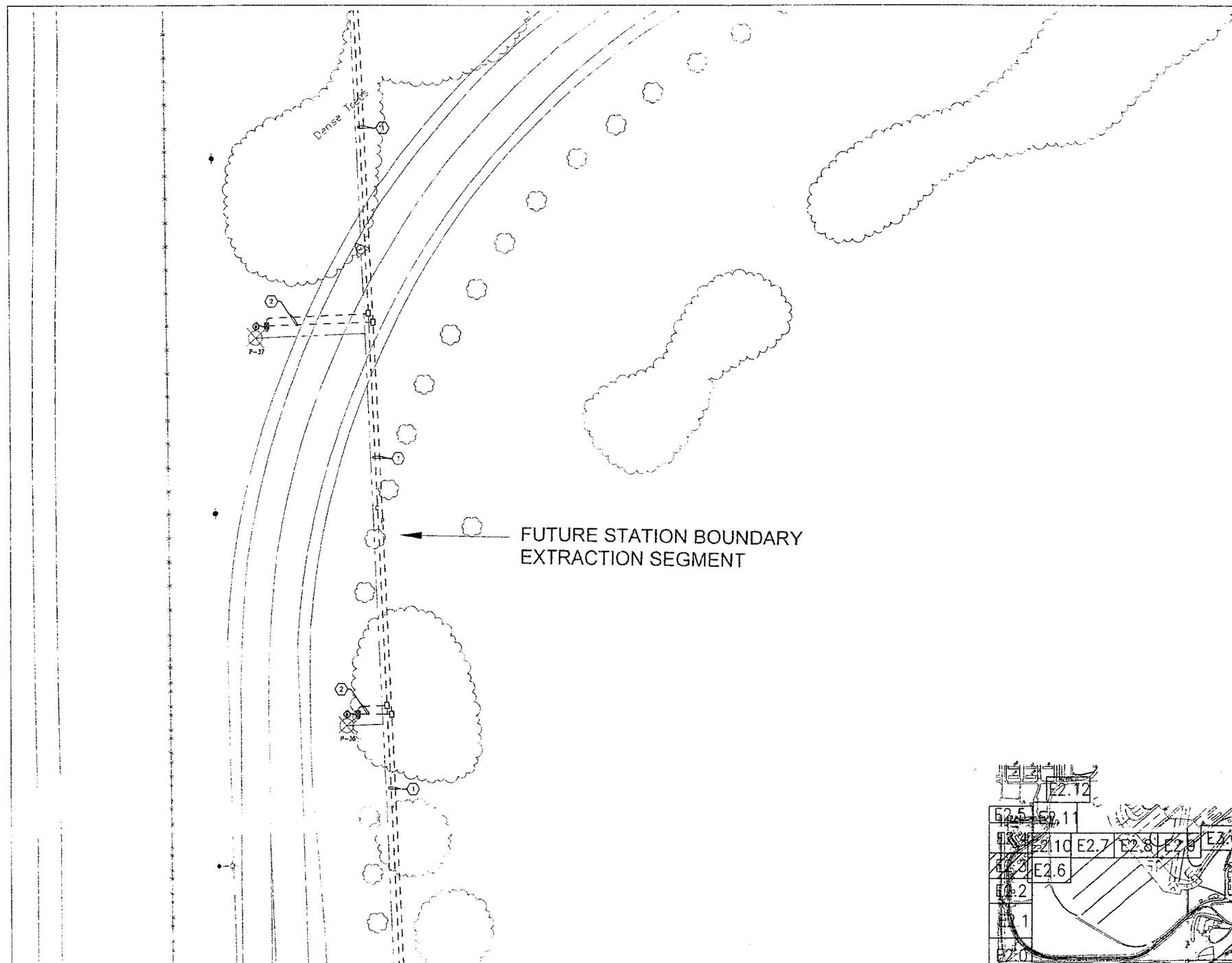

SHEET NOTES

1. MAIN POWER SHALL BE 1-2"P - 3/0 FOR POWER AND 1-1 1/4"C - 2-RG6 COAX FOR CONTROL AND 1/2 BC IN BOTTOM OF TRENCH.
2. LATERAL RUN TO PUMP PIT SHALL BE 1-1"P - 3/10 AND 1-1"C - 2-RG6 COAX FOR CONTROL AND 1/2 BC IN BOTTOM OF TRENCH.

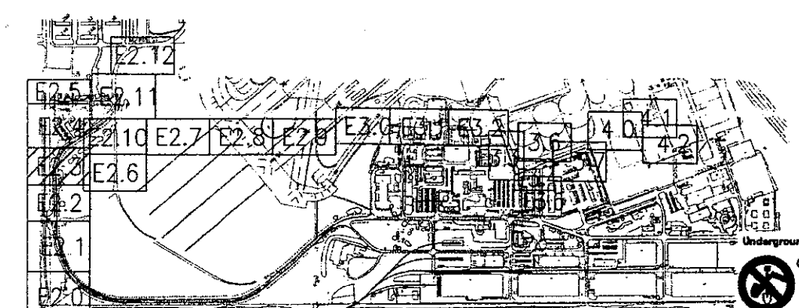

Underground Service Alert
Call:TOll FREE
1-800
422-4133

NO.	DATE	APPR.	REVISION	NO.	DATE	APPR.	REVISION
				0	2/6/05	ER	FINAL 100% DESIGN/ISSUED FOR CONSTRUCTION
				0	11/3/04	ER	REVISION C 100% DRAFT DESIGN SUBMITTAL
				0	10/15/04	ER	100% DESIGN
				0	5/19/04	ER	REVISION B 90% DESIGN REVIEW
				0	2/14/04	ER	REVISION A 90% DESIGN SUBMITTAL

DEPARTMENT OF THE NAVY
SOUTHWEST DIVISION
San Diego California

WESTON SOLUTIONS

CHECKED		CLIENT APPROVALS	
DES. ENG.			
PROJ. ENG.			
PROJ. MGR.			
APPROVED			
APPROVED		ISSUED FOR	DATE

REGISTERED PROFESSIONAL ENGINEER
EDWARD A. RITZ
No. E 8294
Exp. 6-30-05
ELECTRICAL
STATE OF CALIFORNIA

ELECTRICAL SITE PLAN -
TRANSFORMER #1 AREA
REMEDIAL DESIGN SHALLOW GROUNDWATER UNIT REMEDY

DRAWN ER/RY	DATE JANUARY, 14 2004	DWG. NO. E-2.3	REV. NO. A
SCALE 1"=20'	W.O. NO. 12254002004001020/JRA 4120	SHT. — OF —	

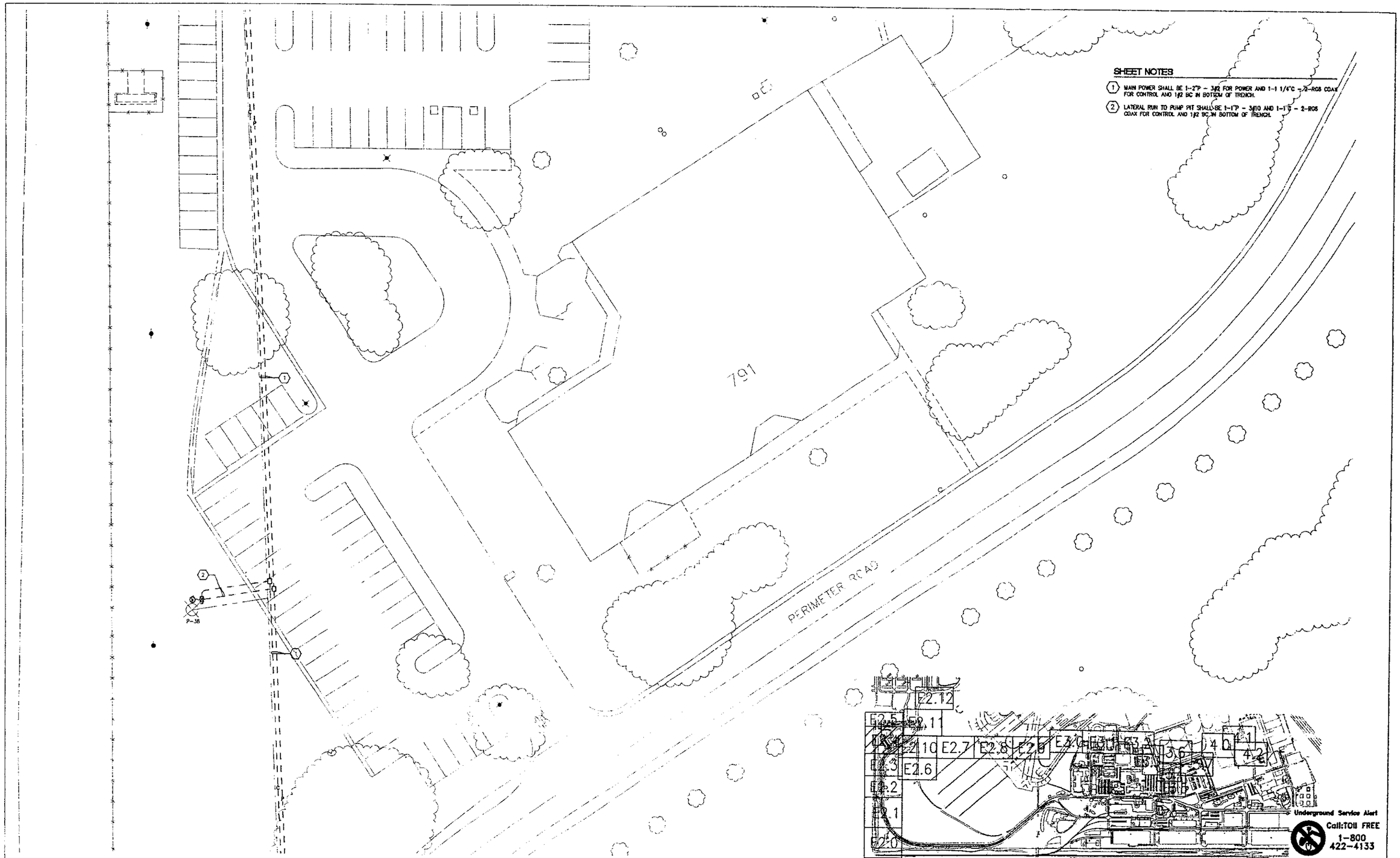

SHEET NOTES

1. MAIN POWER SHALL BE 1-2"P - 3#2 FOR POWER AND 1-1 1/4"C - 2-RG6 COAX FOR CONTROL AND 1#2 BC IN BOTTOM OF TRENCH.
2. LATERAL RUN TO PUMP PIT SHALL BE 1-1"P - 3#10 AND 1-1"C - 2-RG6 COAX FOR CONTROL AND 1#2 BC IN BOTTOM OF TRENCH.

Underground Service Alert
Call:TOll FREE
1-800
422-4133

NO.	DATE	APPR.	REVISION
0	2/9/05	ER	FINAL 100% DESIGN/ISSUED FOR CONSTRUCTION
0	11/3/04	ER	REVISION C 100% DRAFT DESIGN SUBMITTAL
0	10/15/04	ER	100% DESIGN
0	5/10/04	ER	REVISION B 90% DESIGN REVIEW
0	2/18/04	ER	REVISION A 90% DESIGN SUBMITTAL

DEPARTMENT OF THE NAVY
SOUTHWEST DIVISION
San Diego California

WESTON SOLUTIONS

Walnut Creek California

CHECKED	DATE	CLIENT APPROVALS	DATE
DES. ENG.			
PROJ. ENG.			
PROJ. MGR.			
APPROVED			
APPROVED		ISSUED FOR	DATE

REGISTERED PROFESSIONAL ENGINEER
EDWARD A. RITO
No. E 8286
Exp. 9-30-06
ELECTRICAL
STATE OF CALIFORNIA

ELECTRICAL SITE PLAN –
TRANSFORMER #1 AREA
REMEDIAL DESIGN SHALLOW GROUNDWATER UNIT REMEDY

DRAWN	DATE	DWG. NO.	REV. NO.
ER/RY	JANUARY, 14 2004	E-2.4	A
SCALE 1"=20'	W.O. NO. 12954002004001020/JRA 4120	SHT. – OF –	

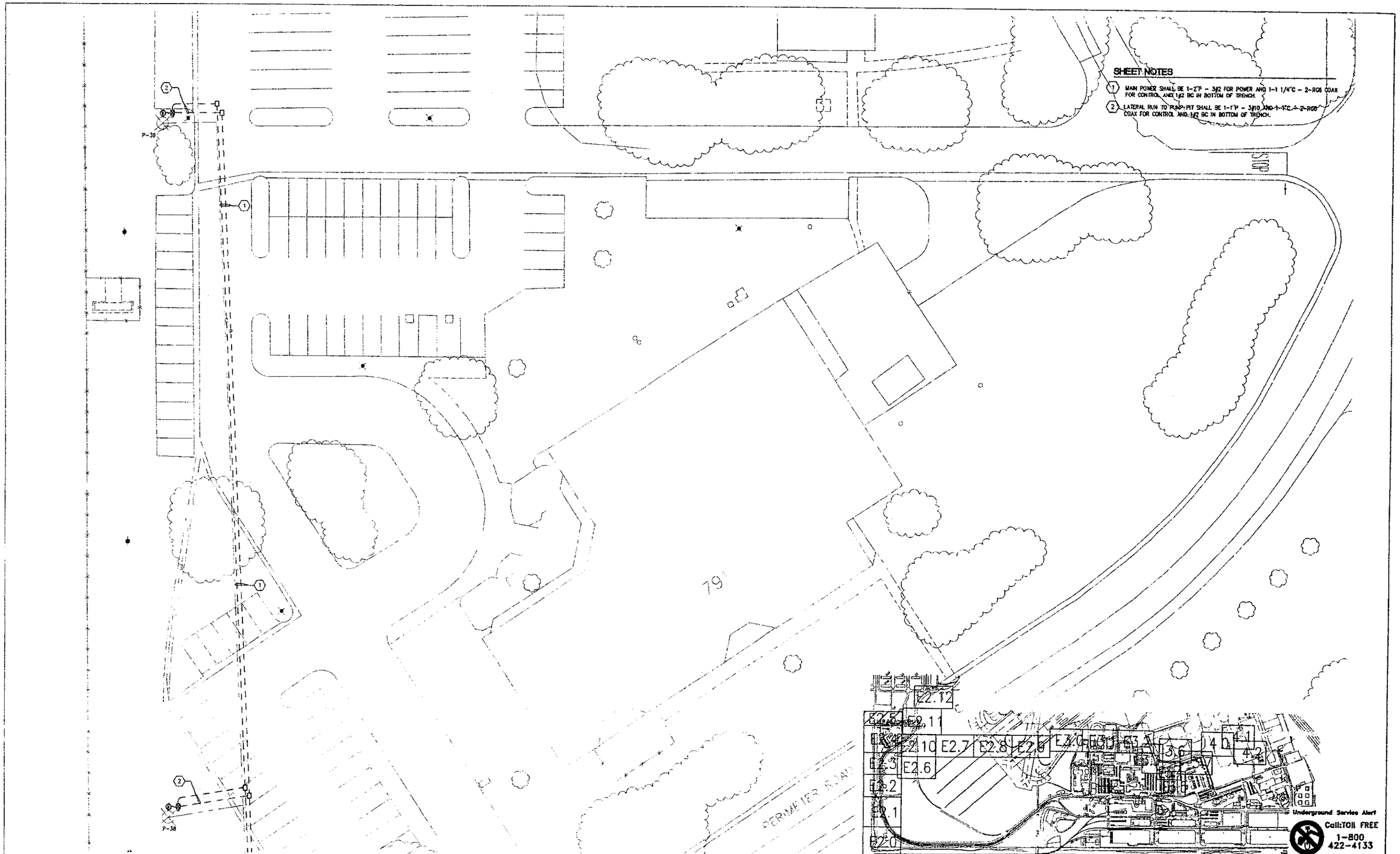

NO.	DATE	APPR.	REVISION	NO.	DATE	APPR.	REVISION
				0	2/9/05	ER	FINAL 100% DESIGN/ISSUED FOR CONSTRUCTION
				0	11/3/04	ER	REVISION C 100% DRAFT DESIGN SUBMITTAL
				0	10/15/04	ER	100% DESIGN
				0	5/10/04	ER	REVISION B 90% DESIGN REVIEW
				0	2/18/04	ER	REVISION A 90% DESIGN SUBMITTAL

DEPARTMENT OF THE NAVY
SOUTHWEST DIVISION
San Diego California

WESTON SOLUTIONS
Walnut Creek California

CHECKED	DATE	CLIENT APPROVALS	DATE
DES. ENG.			
PROJ. ENG.			
PROJ. MGR.			
APPROVED			
APPROVED		ISSUED FOR	DATE

REGISTERED PROFESSIONAL ENGINEER
EDWARD A. RITO
No. E 8284
Exp. 9-30-05
ELECTRICAL
STATE OF CALIFORNIA

ELECTRICAL SITE PLAN –
TRANSFORMER #1 AREA
REMEDIAL DESIGN SHALLOW GROUNDWATER UNIT REMEDY

DRAWN	DATE	DWG. NO.	REV. NO.
ER/RY	JANUARY, 14 2004	E-2.5	A
SCALE 1"=20'	S.O. NO. 12354022004001028/RA 4129	SHT. – OF –	

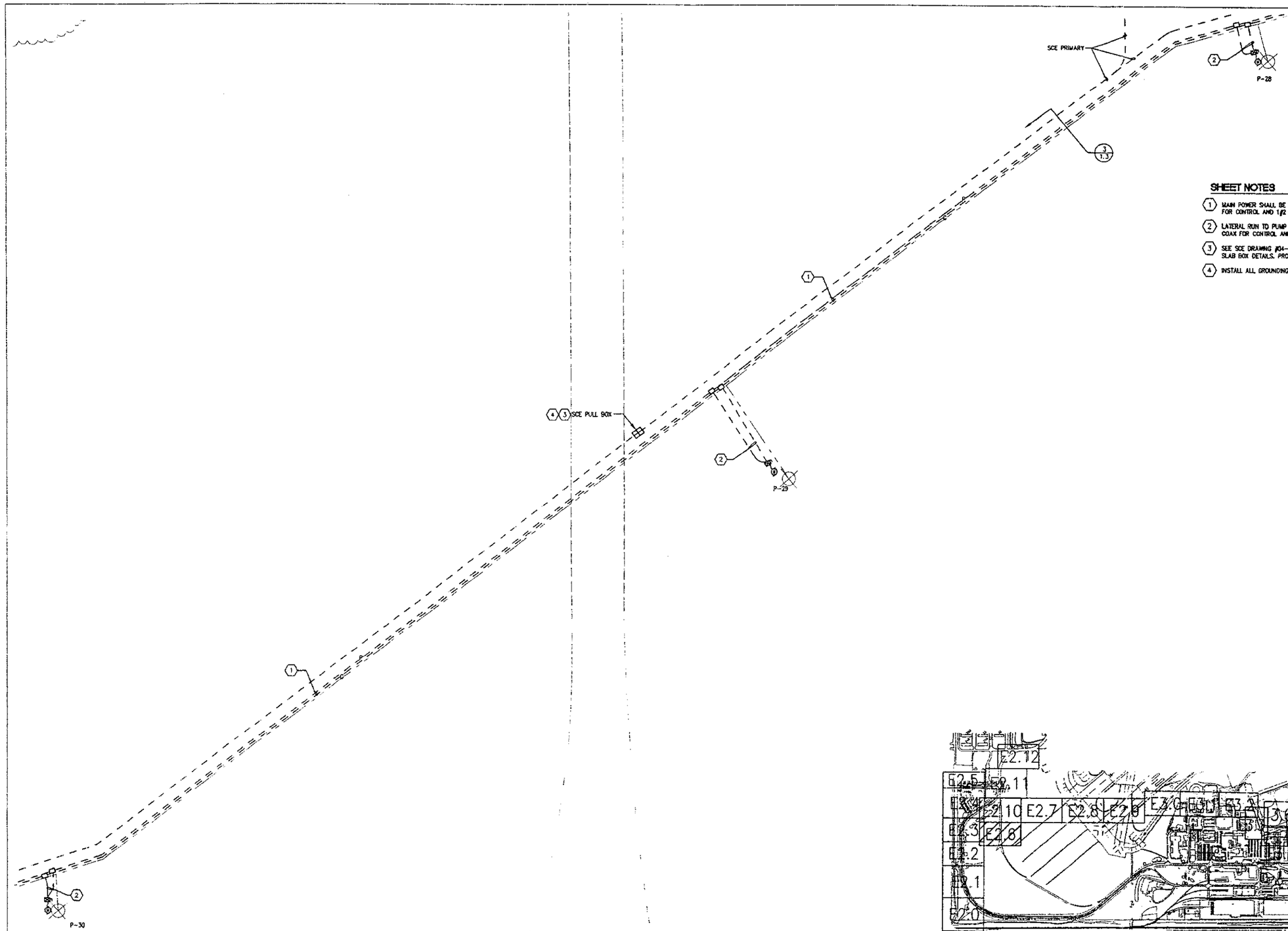

SHEET NOTES

1. MAIN POWER SHALL BE 1-2"P - 3#2 FOR POWER AND 1-1 1/4"C - 1-RG8 COAX FOR CONTROL AND 1#2 BC IN BOTTOM OF TRENCH.
2. LATERAL RUN TO PUMP PIT SHALL BE 1-1"P - 3#10 AND 1-1"C - 2-RG6 COAX FOR CONTROL AND 1#2 BC IN BOTTOM OF TRENCH.
3. SEE SCE DRAWING #04-105 FOR PULL BOX, POLE RISER AND TRANSFORMER SLAB BOX DETAILS. PROVIDE AND INSTALL ALL STRUCTURES PER SCE STANDARDS.
4. INSTALL ALL GROUNDING AS PER SCE DRAWINGS AND STANDARDS.

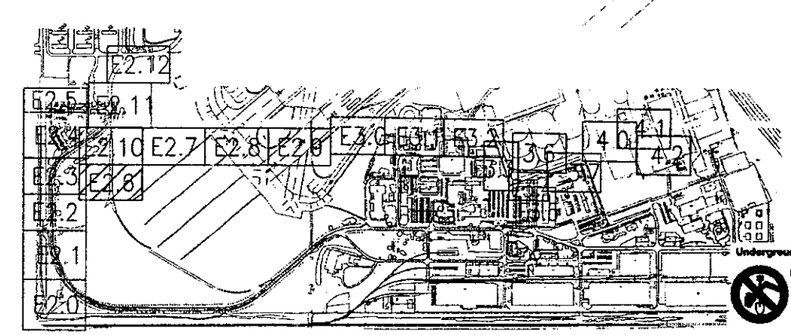

Underground Service Alert
Call:TOLL FREE
1-800
422-4133

NO.	DATE	APPR.	REVISION	NO.	DATE	APPR.	REVISION
				0	2/9/05	ER	FINAL 100% DESIGN/ISSUED FOR CONSTRUCTION
				0	11/3/04	ER	REVISION C 100% DRAFT DESIGN SUBMITTAL
				0	10/15/04	ER	100% DESIGN
				0	5/10/04	ER	REVISION B 90% DESIGN REVIEW
				0	2/18/04	ER	REVISION A 90% DESIGN SUBMITTAL

DEPARTMENT OF THE NAVY
SOUTHWEST DIVISION
San Diego California

WESTON SOLUTIONS
Walnut Creek California

CHECKED	DATE	CLIENT APPROVALS	DATE
DES. ENG.			
PROJ. ENG.			
PROJ. MGR.			
APPROVED			
APPROVED		ISSUED FOR	DATE

REGISTERED PROFESSIONAL ENGINEER
EDWARD A. RITO
No. E 8294
Exp. 9-30-05
ELECTRICAL
STATE OF CALIFORNIA

ELECTRICAL SITE PLAN –
TRANSFORMER #1 AREA
REMEDIAL DESIGN SHALLOW GROUNDWATER UNIT REMEDY

DRAWN	DATE	DWG. NO.	REV. NO.
ER/RY	JANUARY, 14 2004	E-2.6	A
SCALE 1"=20'	W.O. NO. 72954002004001020/JPA 4120	SHT. – OF –	

SHEET NOTES

1. MAIN POWER SHALL BE 1-2"P - 3#2 FOR POWER AND 1-1 1/4"C - 1-RG8 COAX FOR CONTROL AND 1#2 BC IN BOTTOM OF TRENCH.
2. LATERAL RUN TO PUMP PIT SHALL BE 1-1"P - 3#10 AND 1-1"C - 2-RG8 COAX FOR CONTROL AND 1#2 BC IN BOTTOM OF TRENCH.
3. SEE SCE DRAWING #04-105 FOR PULL BOX, POLE RISER AND TRANSFORMER SLAB BOX DETAILS. PROVIDE AND INSTALL ALL STRUCTURES PER SCE STANDARDS.
4. INSTALL ALL GROUNDING AS PER SCE DRAWINGS AND STANDARDS.

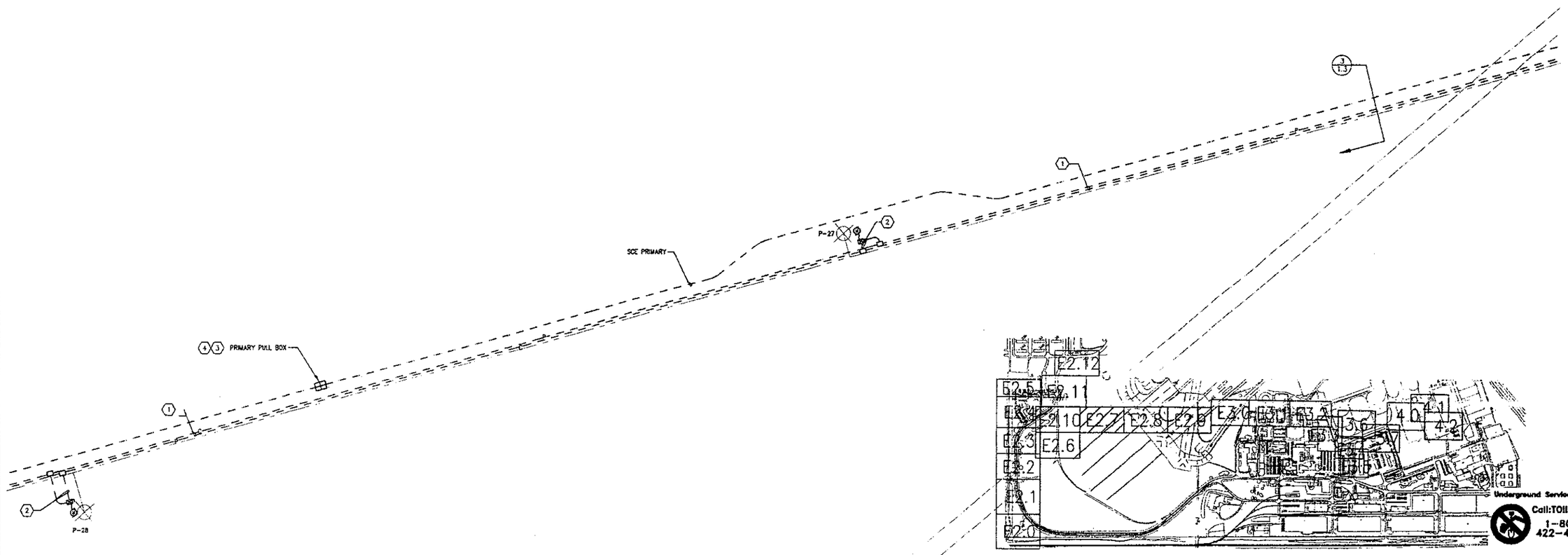

Underground Service Alert
Call:TOll FREE
1-800
422-4133

NO.	DATE	APPR.	REVISION	NO.	DATE	APPR.	REVISION
				0	2/9/05	ER	FINAL 100% DESIGN/ISSUED FOR CONSTRUCTION
				0	11/3/04	ER	REVISION C 100% DRAFT DESIGN SUBMITTAL
				0	10/15/04	ER	100% DESIGN
				0	5/10/04	ER	REVISION B 90% DESIGN REVIEW
				0	2/18/04	ER	REVISION A 90% DESIGN SUBMITTAL

DEPARTMENT OF THE NAVY
SOUTHWEST DIVISION
San Diego California

WESTON SOLUTIONS
Walnut Creek California

CHECKED	DATE	CLIENT APPROVALS	DATE
DES. ENG.			
PROJ. ENG.			
PROJ. MGR.			
APPROVED			
APPROVED		ISSUED FOR	DATE

REGISTERED PROFESSIONAL ENGINEER
LEONARD A. RITO
No. E 8284
Exp. 9-30-05
ELECTRICAL
STATE OF CALIFORNIA

ELECTRICAL SITE PLAN -
TRANSFORMER #1 AREA
REMEDIAL DESIGN SHALLOW GROUNDWATER UNIT REMEDY

DRAWN	DATE	DWG. NO.	REV. NO.
ER/RY	JANUARY, 14 2004	E-2.7	A
SCALE 1"=20'	W.O. NO. 12954002004001029/SPA 4120	SHT. - OF -	

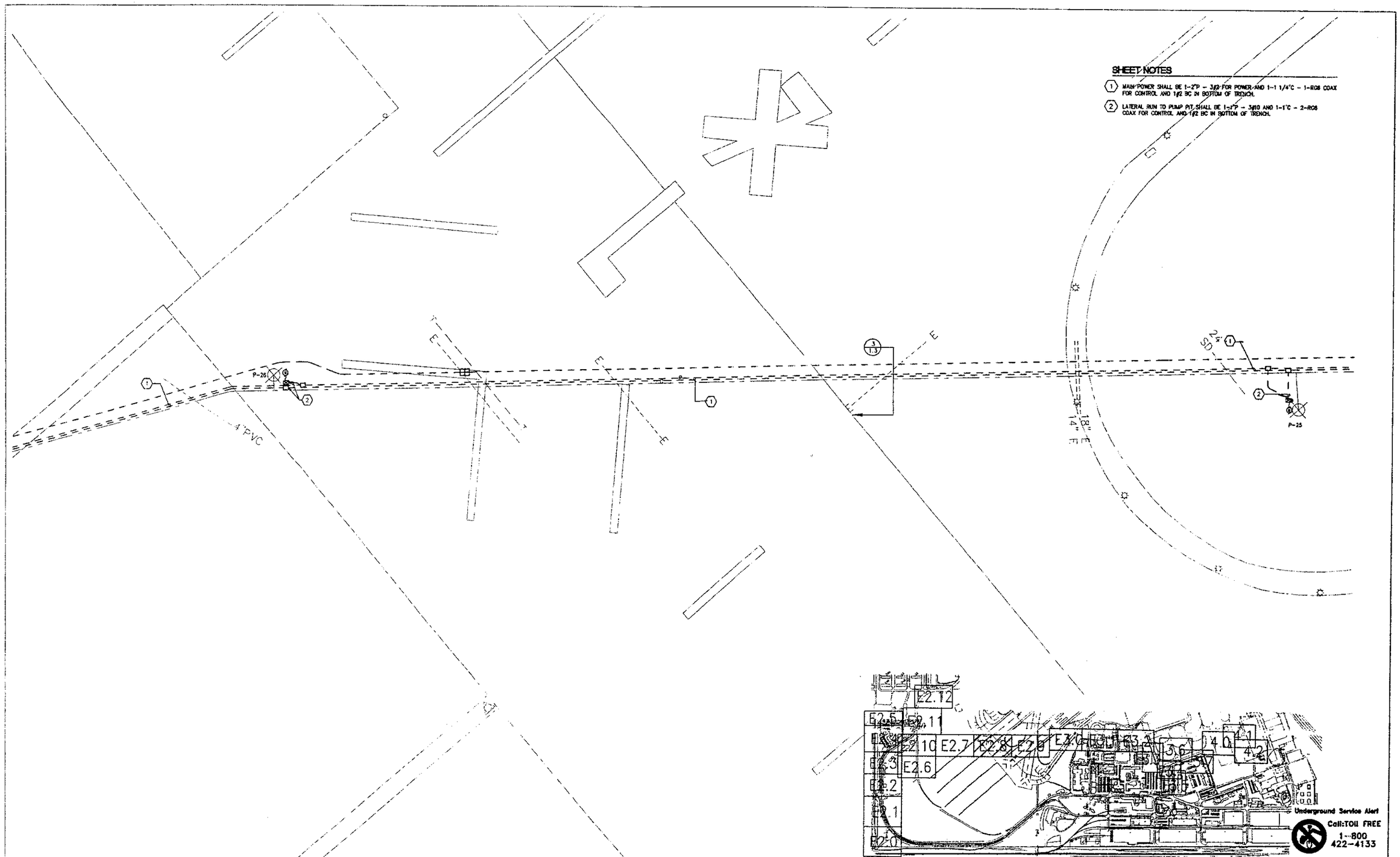

SHEET NOTES

1. MAIN POWER SHALL BE 1-2"P - 3#2 FOR POWER AND 1-1 1/4"C - 1-RG6 COAX FOR CONTROL AND 1#2 BC IN BOTTOM OF TRENCH.
2. LATERAL RUN TO PUMP PIT SHALL BE 1-1"P - 3#10 AND 1-1"C - 2-RG6 COAX FOR CONTROL AND 1#2 BC IN BOTTOM OF TRENCH.

NO.	DATE	APPR.	REVISION
0	2/9/03	ER	FINAL 100% DESIGN/ISSUED FOR CONSTRUCTION
0	11/3/04	ER	REVISION C 100% DRAFT DESIGN SUBMITTAL
0	10/15/04	ER	100% DESIGN
0	5/12/04	ER	REVISION B 90% DESIGN REVIEW
0	2/16/04	ER	REVISION A 90% DESIGN SUBMITTAL

DEPARTMENT OF THE NAVY
SOUTHWEST DIVISION
San Diego California

WESTON SOLUTIONS

CHECKED	-	DATE	CLIENT APPROVALS
DES. ENG.	-	-	
PROJ. ENG.	-	-	
PROJ. MGR.	-	-	
APPROVED	-	-	
APPROVED	-	-	ISSUED FOR

REGISTERED PROFESSIONAL ENGINEER
EDWARD A. RITO
No. E 8204
Exp. 9-30-05
ELECTRICAL
STATE OF CALIFORNIA

ELECTRICAL SITE PLAN -
TRANSFORMER #1 AREA
REMEDIAL DESIGN SHALLOW GROUNDWATER UNIT REMEDY

DRAWN	DATE	DWG. NO.	REV. NO.
ER/RY	JANUARY, 14 2004	E-2.8	A
SCALE 1"=20	W.O. NO. 12954002004001020/JRA 4120	SHT. - OF -	

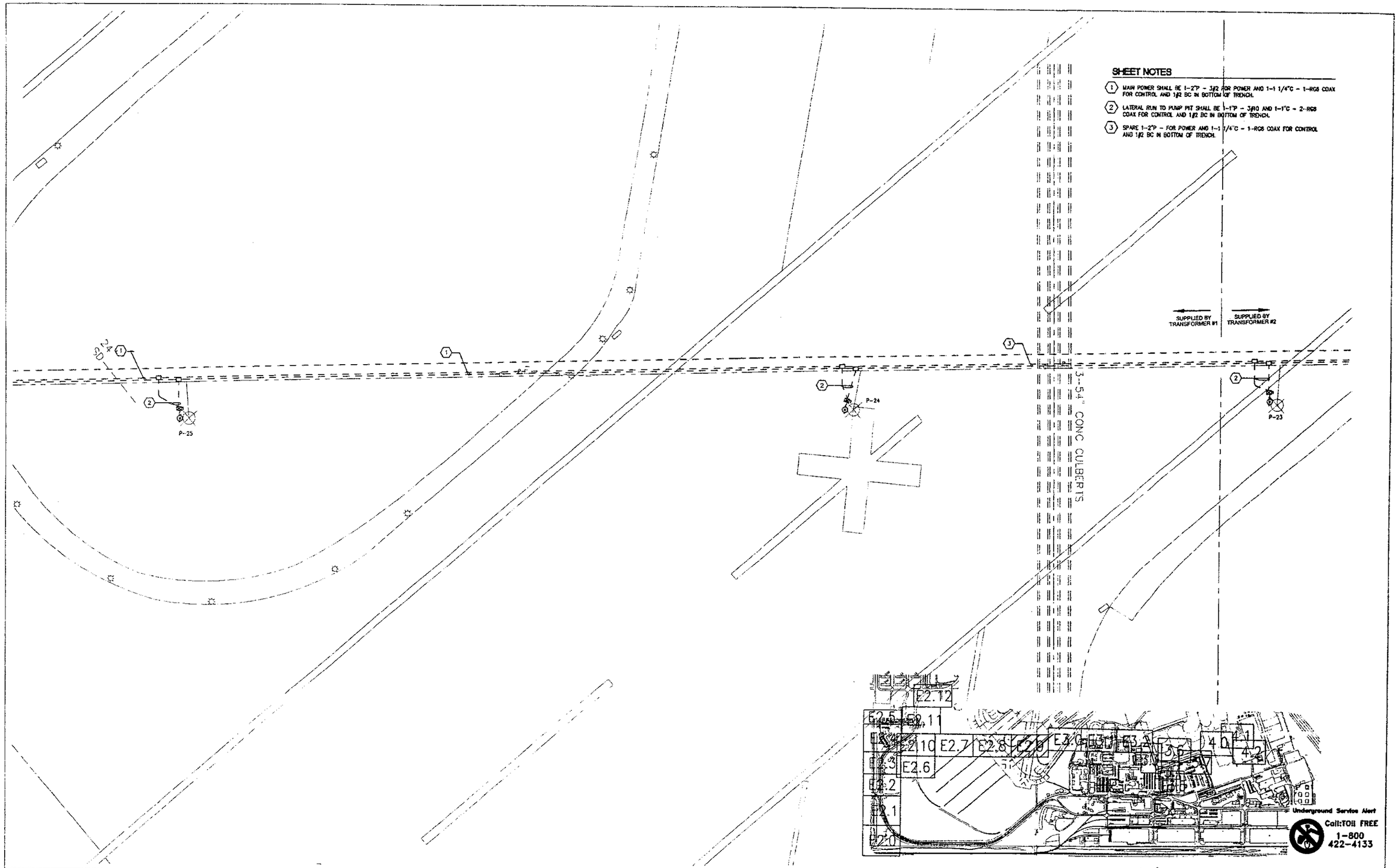

NO.	DATE	APPR.	REVISION
0	2/9/05	ER	FINAL 100% DESIGN/ISSUED FOR CONSTRUCTION
0	11/3/04	ER	REVISION C 100% DRAFT DESIGN SUBMITTAL
0	10/15/04	ER	100% DESIGN
0	5/10/04	ER	REVISION B 90% DESIGN REVIEW
0	2/18/04	ER	REVISION A 90% DESIGN SUBMITTAL

DEPARTMENT OF THE NAVY
SOUTHWEST DIVISION
San Diego California

WESTON SOLUTIONS

CHECKED		CLIENT APPROVALS	
DES. ENG.			
PROJ. ENG.			
PROJ. MGR.			
APPROVED			
APPROVED		ISSUED FOR	

REGISTERED PROFESSIONAL ENGINEER EDWARD A. RITO No. E 2094 Exp. 9-30-05 ELECTRICAL STATE OF CALIFORNIA

ELECTRICAL SITE PLAN -
TRANSFORMER #1 AREA
REMEDIAL DESIGN SHALLOW GROUNDWATER UNIT REMEDY

DRAWN	DATE	DWG. NO.	REV. NO.
ER/RY	JANUARY, 14 2004	E-2.9	A
SCALE 1"=20'	W.O. NO. 12954002004001020/JRA 4120	SHT. - OF -	

SHEET NOTES

1. MAIN POWER SHALL BE 1-2"P - 3#2 FOR POWER AND 1-1 1/4"C - 1-RG8 COAX FOR CONTROL AND 1#2 BC IN BOTTOM OF TRENCH.
2. LATERAL RUN TO PUMP PIT SHALL BE 1-1"P - 3#10 AND 1-1"C - 2-RG8 COAX FOR CONTROL AND 1#2 BC IN BOTTOM OF TRENCH.
3. SEE SCE DRAWING #04-105 FOR PULL BOX, POLE RISER AND TRANSFORMER SLAB BOX DETAILS. PROVIDE AND INSTALL ALL STRUCTURES PER SCE STANDARDS.

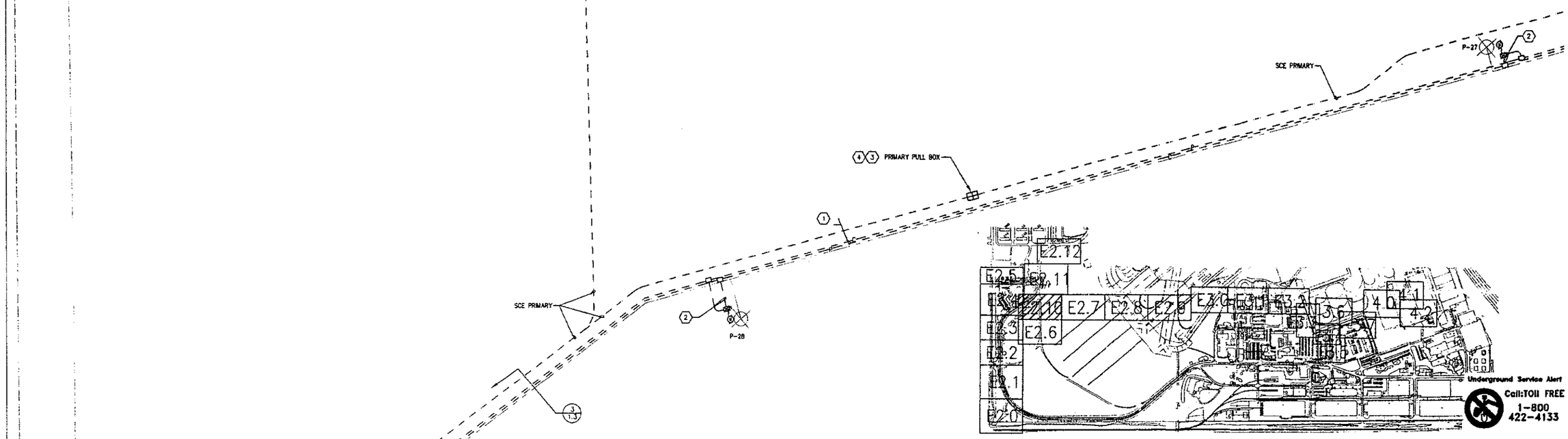

NO.	DATE	APPR.	REVISION
0	2/9/05	ER	FINAL 100% DESIGN/ISSUED FOR CONSTRUCTION
0	11/3/04	ER	REVISION C 100% DRAFT DESIGN SUBMITTAL
0	10/15/04	ER	100% DESIGN
0	5/14/04	ER	REVISION B 90% DESIGN REVIEW
0	2/18/04	ER	REVISION A 90% DESIGN SUBMITTAL

DEPARTMENT OF THE NAVY
SOUTHWEST DIVISION
San Diego California

WESTON SOLUTIONS
Walnut Creek California

CHECKED	DATE	CLIENT APPROVALS	DATE
DES. ENG.			
PROJ. ENG.			
PROJ. MGR.			
APPROVED			
APPROVED		ISSUED FOR	DATE

REGISTERED PROFESSIONAL ENGINEER EDWARD A. RITO No. E 5294 Exp. 3-30-05 ELECTRICAL STATE OF CALIFORNIA

ELECTRICAL SITE PLAN -
TRANSFORMER #1 AREA
REMEDIAL DESIGN SHALLOW GROUNDWATER UNIT REMEDY

DRAWN	DATE	DWG. NO.	REV. NO.
ER/RY	JANUARY, 14 2004	E-2.10	A
SCALE 1"=20'	W.O. NO. 12254002204001020/#PA 4120	SHT. - OF -	

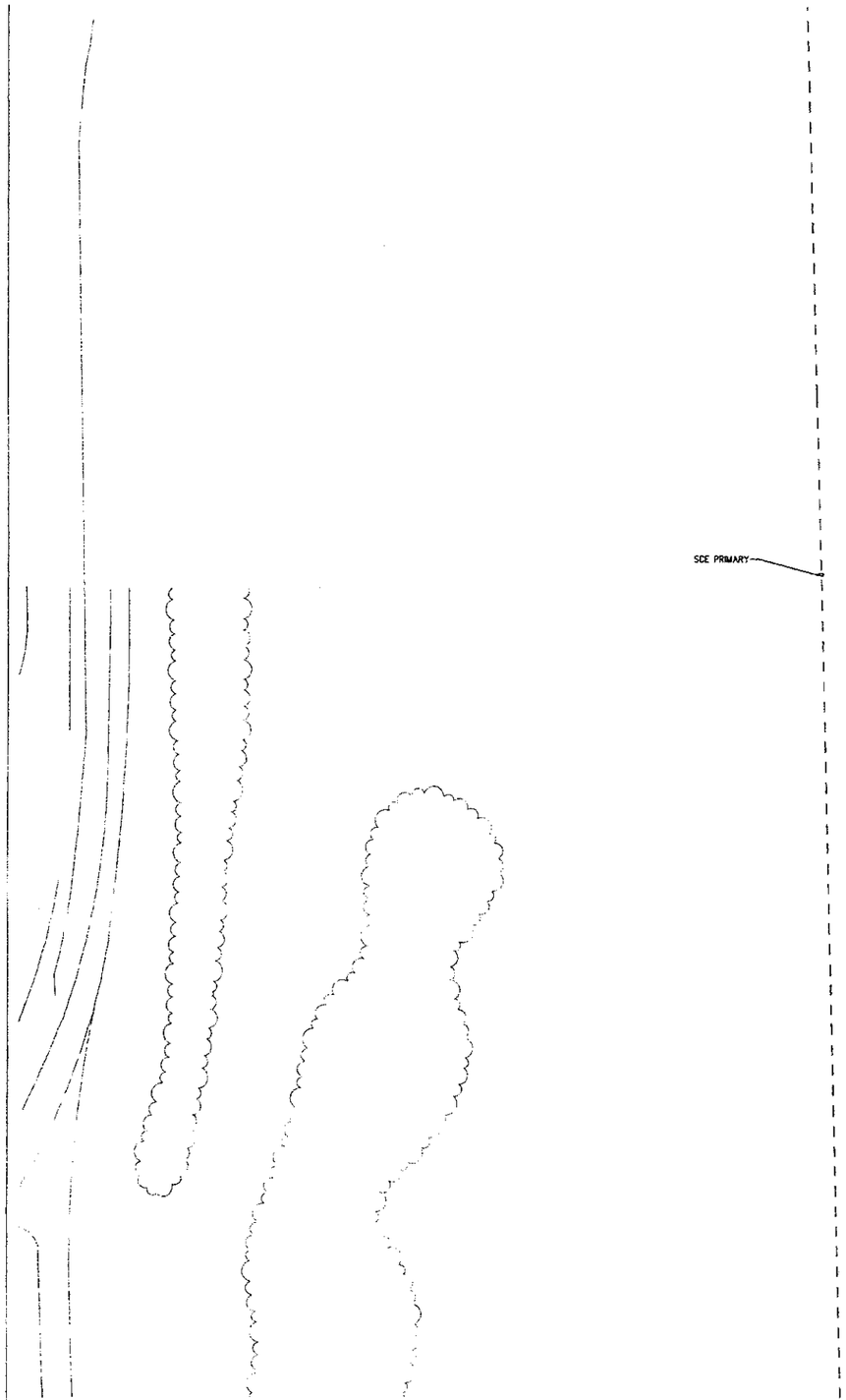

SHEET NOTES

1. SEE SCE DRAWING #04105 AND INSTALL ALL STRUCTURES PER SCE STANDARDS.

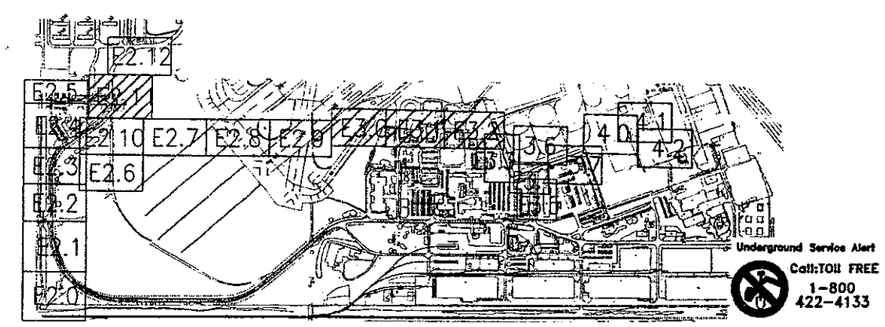

Underground Service Alert
Call:TOll FREE
1-800
422-4133

NO.	DATE	APPR.	REVISION	NO.	DATE	APPR.	REVISION
				0	2/9/05	ER	FINAL 100% DESIGN/ISSUED FOR CONSTRUCTION
				0	11/3/04	ER	REVISION C 100% DRAFT DESIGN SUBMITTAL
				0	10/15/04	ER	100% DESIGN
				0	5/10/04	ER	REVISION B 90% DESIGN REVIEW
				0	2/16/04	ER	REVISION A 90% DESIGN SUBMITTAL

DEPARTMENT OF THE NAVY
SOUTHWEST DIVISION
San Diego California

WESTON SOLUTIONS
Walnut Creek California

CHECKED	DATE	CLIENT APPROVALS	DATE
DES. ENG.			
PROJ. ENG.			
PROJ. MGR.			
APPROVED			
APPROVED		ISSUED FOR	DATE

REGISTERED PROFESSIONAL ENGINEER
EDWARD A. RITO
No. E 8204
Exp. 9-30-06
ELECTRICAL
STATE OF CALIFORNIA

ELECTRICAL SITE PLAN –
TRANSFORMER #1 AREA
REMEDIAL DESIGN SHALLOW GROUNDWATER UNIT REMEDY

DRAWN	DATE	DWG. NO.	REV. NO.
ER/RY	JANUARY, 14 2004	E-2.11	A
SCALE 1"=20	W.O. NO. 12954002004001020/JRA 4120	SHT. – OF –	

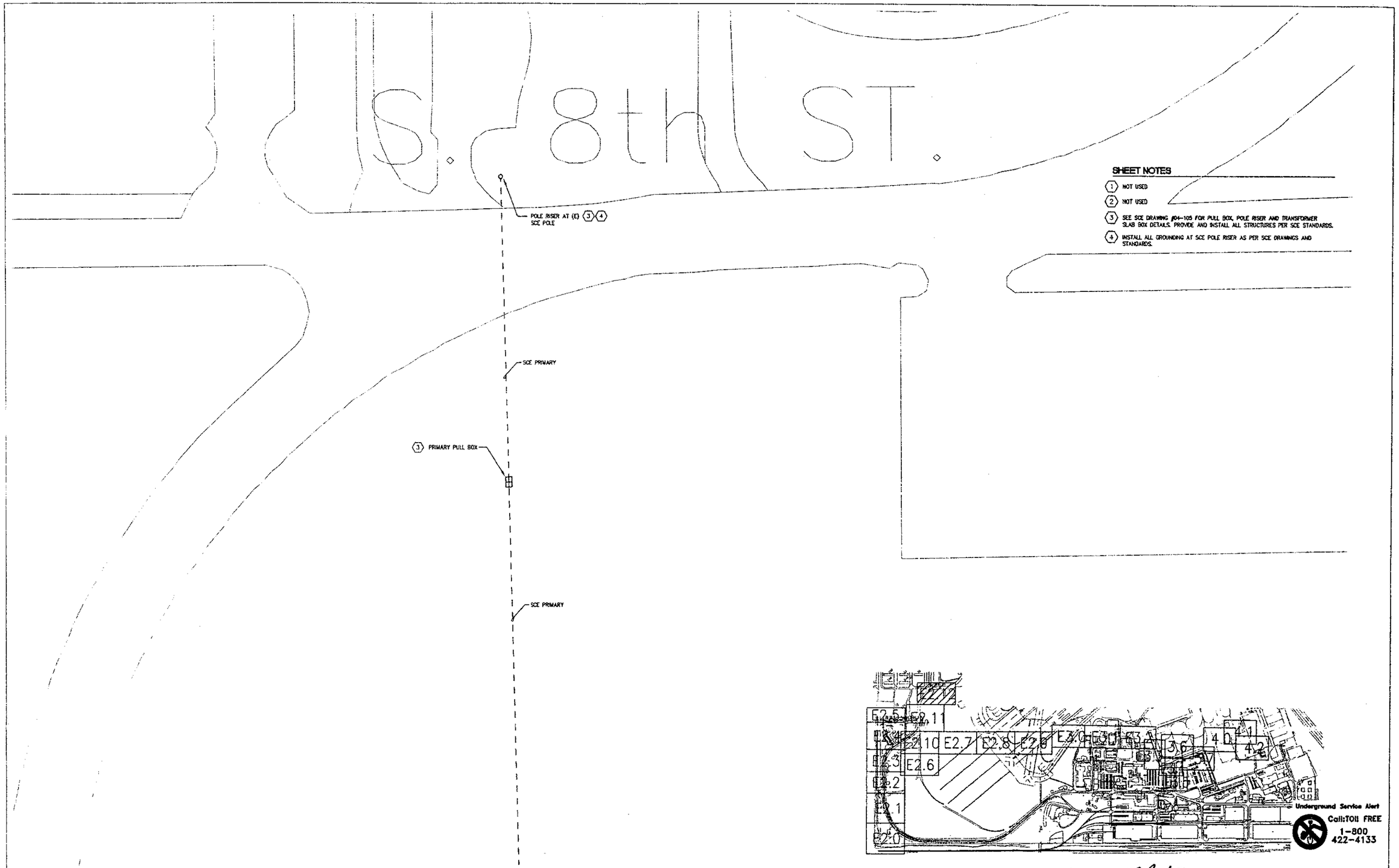

SHEET NOTES

1. NOT USED
2. NOT USED
3. SEE SCE DRAWING #04-105 FOR PULL BOX, POLE RISER AND TRANSFORMER SLAB BOX DETAILS. PROVIDE AND INSTALL ALL STRUCTURES PER SCE STANDARDS.
4. INSTALL ALL GROUNDING AT SCE POLE RISER AS PER SCE DRAWINGS AND STANDARDS.

NO.	DATE	APPR.	REVISION	NO.	DATE	APPR.	REVISION
				0	2/8/05	ER	FINAL 100% DESIGN/ISSUED FOR CONSTRUCTION
				0	11/3/04	ER	REVISION C 100% DRAFT DESIGN SUBMITTAL
				0	10/15/04	ER	100% DESIGN
				0	5/10/04	ER	REVISION B 90% DESIGN REVIEW
				0	2/16/04	ER	REVISION A 90% DESIGN SUBMITTAL

DEPARTMENT OF THE NAVY
SOUTHWEST DIVISION
San Diego California

WESTON SOLUTIONS
Walnut Creek California

CHECKED	DATE	CLIENT APPROVALS	DATE
DES. ENG.			
PROJ. ENG.			
PROJ. MGR.			
APPROVED			
APPROVED		ISSUED FOR	DATE

REGISTERED PROFESSIONAL ENGINEER
EDWARD A. RITO
No. E 8284
Exp. 9-30-06
ELECTRICAL
STATE OF CALIFORNIA

ELECTRICAL SITE PLAN –
TRANSFORMER #1 AREA
REMEDIAL DESIGN SHALLOW GROUNDWATER UNIT REMEDY

DRAWN	DATE	DWG. NO.	REV. NO.
ER/RY	JANUARY, 14 2004	E-2.12	A
SCALE 1"=20'	W.O. NO. 12954002004001020/JRA 4120	SHT. – OF –	

SHEET NOTES

1. MAIN POWER SHALL BE 1-2"P - 3/2 FOR POWER AND 1-1 1/4"C - 1-RG8 COAX FOR CONTROL AND 1/2 BC IN BOTTOM OF TRENCH.
2. LATERAL RUN TO PUMP PIT SHALL BE 1-1"P - 3/10 AND 1-1"C - 2-RG8 COAX FOR CONTROL AND 1/2 BC IN BOTTOM OF TRENCH.
3. SEE SCE DRAWING #04-103 FOR PULL BOX, POLE RISER AND TRANSFORMER SLAB BOX DETAILS. PROVIDE AND INSTALL ALL STRUCTURES PER SCE STANDARDS.
4. INSTALL ALL GROUNDING AS PER SCE DRAWINGS AND STANDARDS.

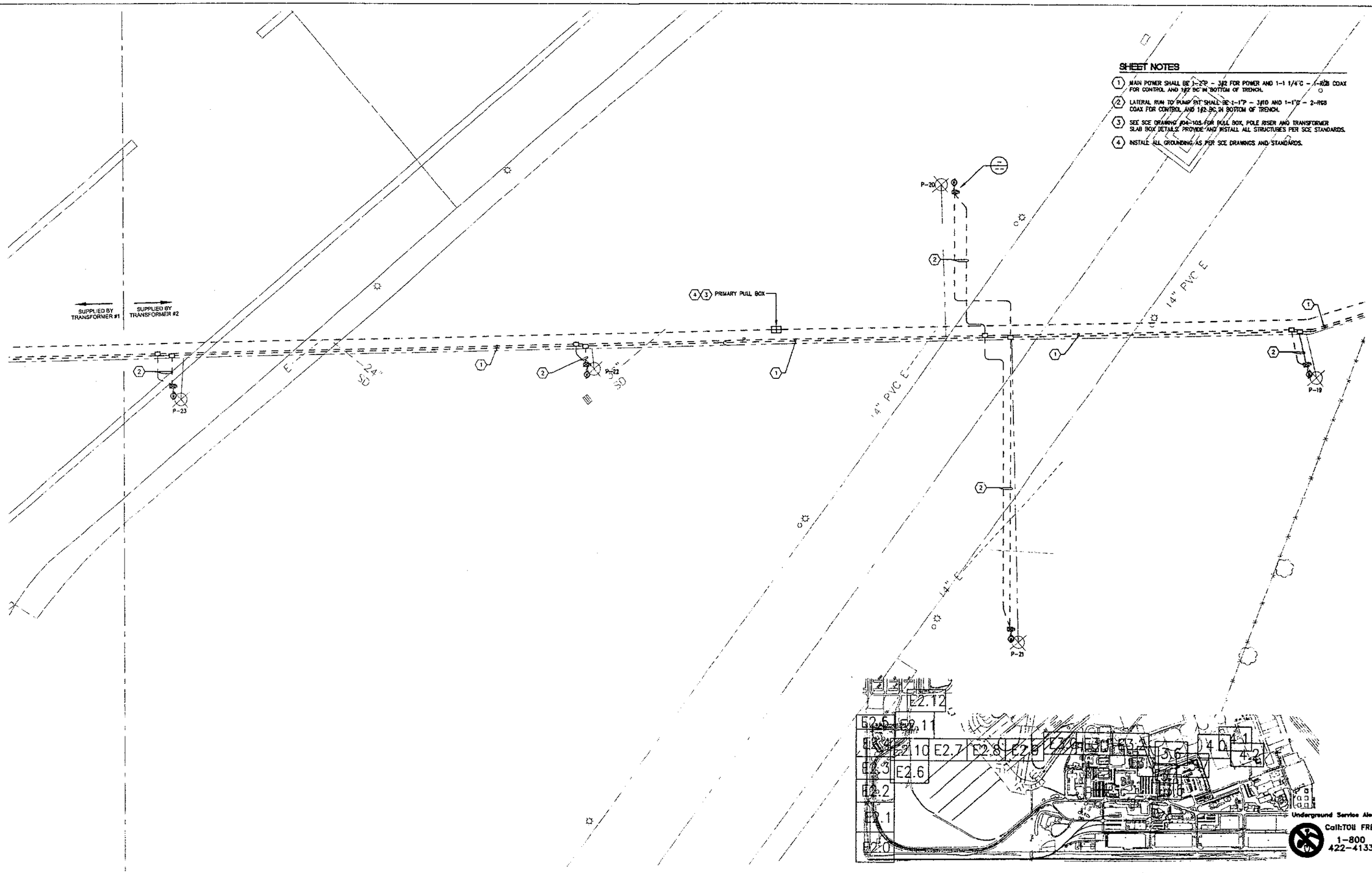

NO.	DATE	APPR.	REVISION	NO.	DATE	APPR.	REVISION
				0	2/8/05	ER	FINAL 100% DESIGN/ISSUED FOR CONSTRUCTION
				0	11/3/04	ER	REVISION C 100% DRAFT DESIGN SUBMITTAL
				0	10/15/04	ER	100% DESIGN
				0	5/10/04	ER	REVISION B 90% DESIGN REVIEW
				0	2/16/04	ER	REVISION A 90% DESIGN SUBMITTAL

DEPARTMENT OF THE NAVY
SOUTHWEST DIVISION
San Diego California

WESTON SOLUTIONS
Walnut Creek California

CHECKED		DATE	CLIENT APPROVALS
DES. ENG.			
PROJ. ENG.			
PROJ. MGR.			
APPROVED			
APPROVED			ISSUED FOR / DATE

REGISTERED PROFESSIONAL ENGINEER EDWARD A. RITO No. E 8094 Exp. 6-30-05 ELECTRICAL STATE OF CALIFORNIA

ELECTRICAL SITE PLAN –
TRANSFORMER #2 AREA
REMEDIAL DESIGN SHALLOW GROUNDWATER UNIT REMEDY

DRAWN	DATE	DWG. NO.	REV. NO.
ER/RY	JANUARY, 14 2004	E-3.0	A
SCALE 1"=20'	E.O. NO. 1295400200400102D/SPA 4120	SHT. – OF –	

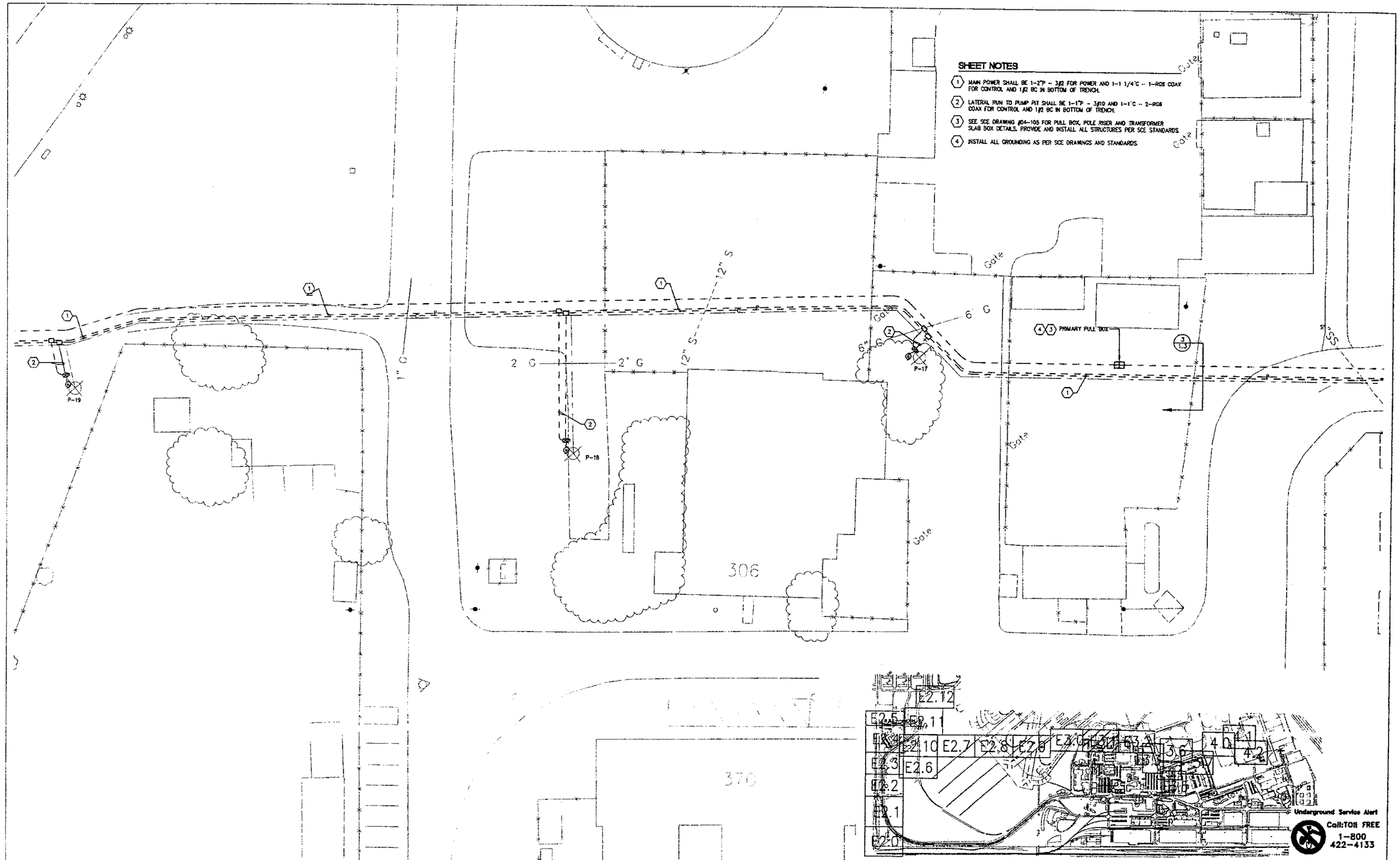

SHEET NOTES

1. MAIN POWER SHALL BE 1-2"P - 3#2 FOR POWER AND 1-1 1/4"C - 1-RG8 COAX FOR CONTROL AND 1#2 BC IN BOTTOM OF TRENCH.
2. LATERAL RUN TO PUMP PIT SHALL BE 1-1"P - 3#10 AND 1-1"C - 2-RG8 COAX FOR CONTROL AND 1#2 BC IN BOTTOM OF TRENCH.
3. SEE SCE DRAWING #04-105 FOR PULL BOX, POLE RISER AND TRANSFORMER SLAB BOX DETAILS. PROVIDE AND INSTALL ALL STRUCTURES PER SCE STANDARDS.
4. INSTALL ALL GROUNDING AS PER SCE DRAWINGS AND STANDARDS.

NO.	DATE	APPR.	REVISION
0	2/9/08	ER	FINAL 100% DESIGN/ISSUED FOR CONSTRUCTION
0	11/3/04	ER	REVISION C 100% DRAFT DESIGN SUBMITTAL
0	10/15/04	ER	100% DESIGN
0	5/10/04	ER	REVISION B 90% DESIGN REVIEW
0	2/16/04	ER	REVISION A 90% DESIGN SUBMITTAL

DEPARTMENT OF THE NAVY
SOUTHWEST DIVISION
San Diego California

WESTON SOLUTIONS

Walnut Creek California

CHECKED		DATE	CLIENT APPROVALS
DES. ENG.			
PROJ. ENG.			
PROJ. MGR.			
APPROVED			
APPROVED			ISSUED FOR

REGISTERED PROFESSIONAL ENGINEER
EDWARD A. RITO
No. E 8284
Exp. 9-30-08
ELECTRICAL
STATE OF CALIFORNIA

ELECTRICAL SITE PLAN -
TRANSFORMER #2 AREA
REMEDIAL DESIGN SHALLOW GROUNDWATER UNIT REMEDY

DRAWN	DATE	DWG. NO.	REV. NO.
ER/RY	JANUARY, 14 2004	E-3.1	A
SCALE	W.O. NO.	SHT. - OF -	
1"=20'	12954002004001020/JRA 4120		

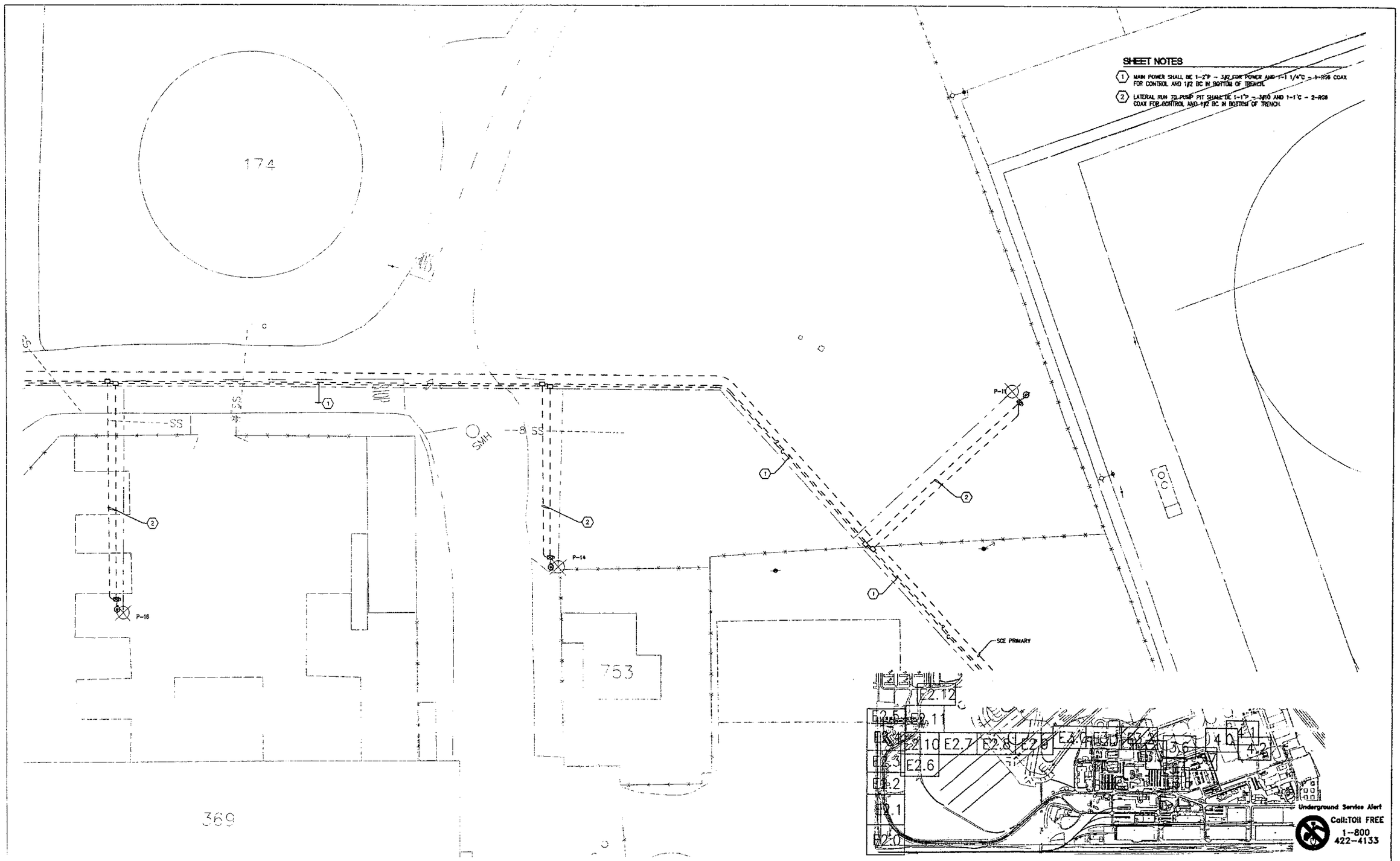

SHEET NOTES

1. MAIN POWER SHALL BE 1-2"P - 3/2 FOR POWER AND 1-1 1/4"C - 1-RG6 COAX FOR CONTROL AND 1/2 BC IN BOTTOM OF TRENCH.
2. LATERAL RUN TO PUMP PIT SHALL BE 1-1"P - 3/10 AND 1-1"C - 2-RG6 COAX FOR CONTROL AND 1/2 BC IN BOTTOM OF TRENCH.

NO.	DATE	APPR.	REVISION
0	2/9/05	ER	FINAL 100% DESIGN/ISSUED FOR CONSTRUCTION
0	11/3/04	ER	REVISION C 100% DRAFT DESIGN SUBMITTAL
0	10/15/04	ER	100% DESIGN
0	5/10/04	ER	REVISION B 90% DESIGN REVIEW
0	2/16/04	ER	REVISION A 90% DESIGN SUBMITTAL

DEPARTMENT OF THE NAVY
SOUTHWEST DIVISION
San Diego California

WESTON SOLUTIONS
Walnut Creek California

CHECKED	DATE	CLIENT APPROVALS	DATE
DES. ENG.			
PROJ. ENG.			
PROJ. MGR.			
APPROVED			
APPROVED		ISSUED FOR	DATE

REGISTERED PROFESSIONAL ENGINEER EDWARD A. RITO No. E 8294 Exp. 9-30-06 ELECTRICAL STATE OF CALIFORNIA

ELECTRICAL SITE PLAN –
TRANSFORMER #2 AREA
REMEDIAL DESIGN SHALLOW GROUNDWATER UNIT REMEDY

DRAWN	DATE	DWG. NO.	REV. NO.
ER/RY	JANUARY, 14 2004	E-3.2	A
SCALE 1"=20	W.O. NO. 12954002004001020/JRA 4120	SHT. – OF –	

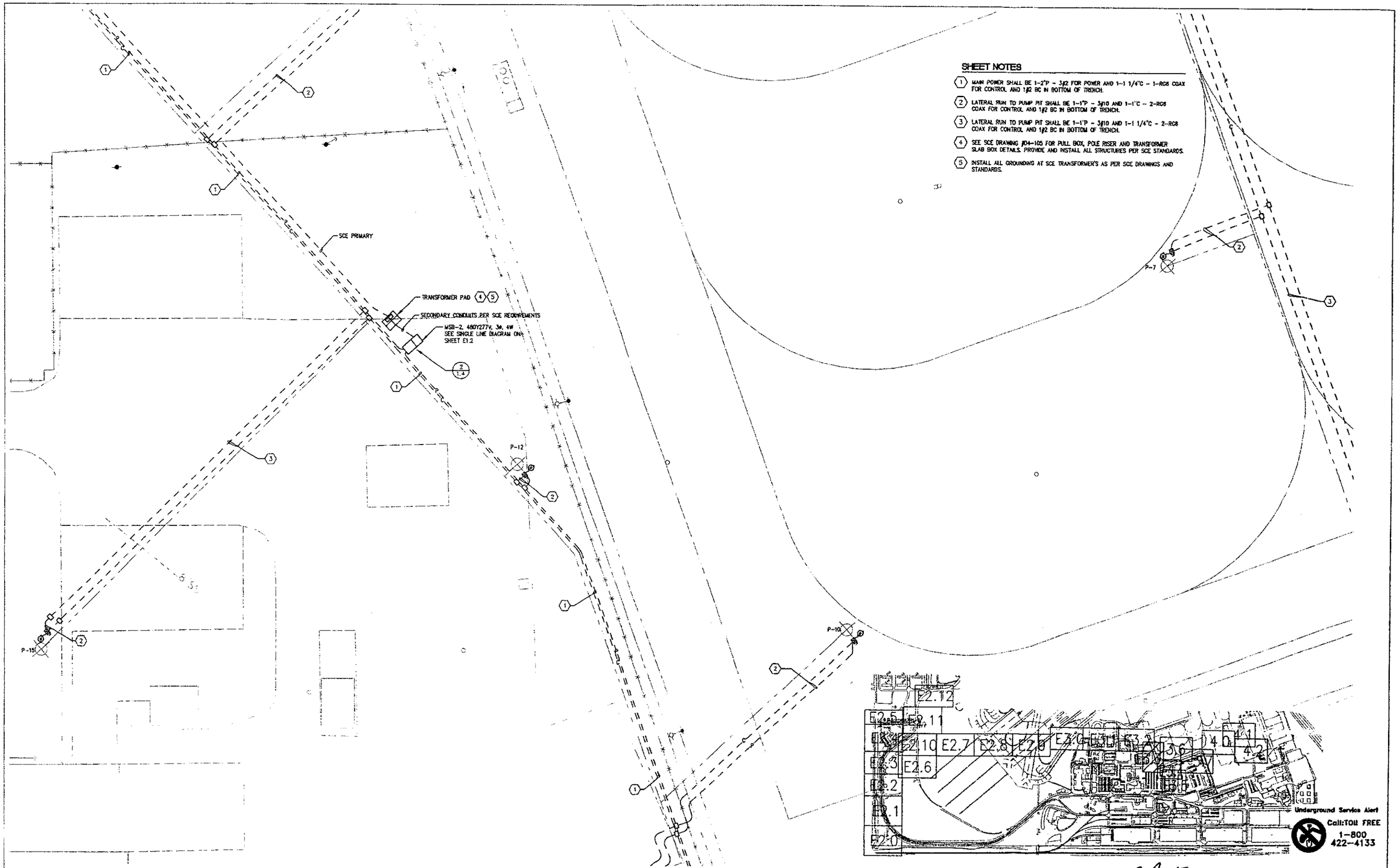

SHEET NOTES

1. MAIN POWER SHALL BE 1-2"P - 3#2 FOR POWER AND 1-1 1/4"C - 1-RG6 COAX FOR CONTROL AND 1#2 BC IN BOTTOM OF TRENCH.
2. LATERAL RUN TO PUMP PIT SHALL BE 1-1"P - 3#10 AND 1-1"C - 2-RG6 COAX FOR CONTROL AND 1#2 BC IN BOTTOM OF TRENCH.
3. LATERAL RUN TO PUMP PIT SHALL BE 1-1"P - 3#10 AND 1-1 1/4"C - 2-RG6 COAX FOR CONTROL AND 1#2 BC IN BOTTOM OF TRENCH.
4. SEE SCE DRAWING #04-105 FOR PULL BOX, POLE RISER AND TRANSFORMER SLAB BOX DETAILS. PROVIDE AND INSTALL ALL STRUCTURES PER SCE STANDARDS.
5. INSTALL ALL GROUNDING AT SCE TRANSFORMER'S AS PER SCE DRAWINGS AND STANDARDS.

NO.	DATE	APPR.	REVISION
0	2/9/05	ER	FINAL 100% DESIGN/ISSUED FOR CONSTRUCTION
0	11/3/04	ER	REVISION C 100% DRAFT DESIGN SUBMITTAL
0	10/13/04	ER	100% DESIGN
0	5/10/04	ER	REVISION B 90% DESIGN REVIEW
0	2/16/04	ER	REVISION A 90% DESIGN SUBMITTAL

DEPARTMENT OF THE NAVY
SOUTHWEST DIVISION
San Diego California

WESTON SOLUTIONS
Walnut Creek California

CHECKED	DATE	CLIENT APPROVALS	DATE
DES. ENG.			
PROJ. ENG.			
PROJ. MGR.			
APPROVED			
APPROVED		ISSUED FOR	DATE

REGISTERED PROFESSIONAL ENGINEER EDWARD A. RITO Exp. 9-30-05 ELECTRICAL STATE OF CALIFORNIA

ELECTRICAL SITE PLAN -
TRANSFORMER #2 AREA
REMEDIAL DESIGN SHALLOW GROUNDWATER UNIT REMEDY

DRAWN	DATE	DWG. NO.	REV. NO.
ER/RY	JANUARY, 14 2004	E-3.3	A
SCALE 1"=20'	W.O. NO. 12254072004001020/SPA 4120	SHT. - OF -	

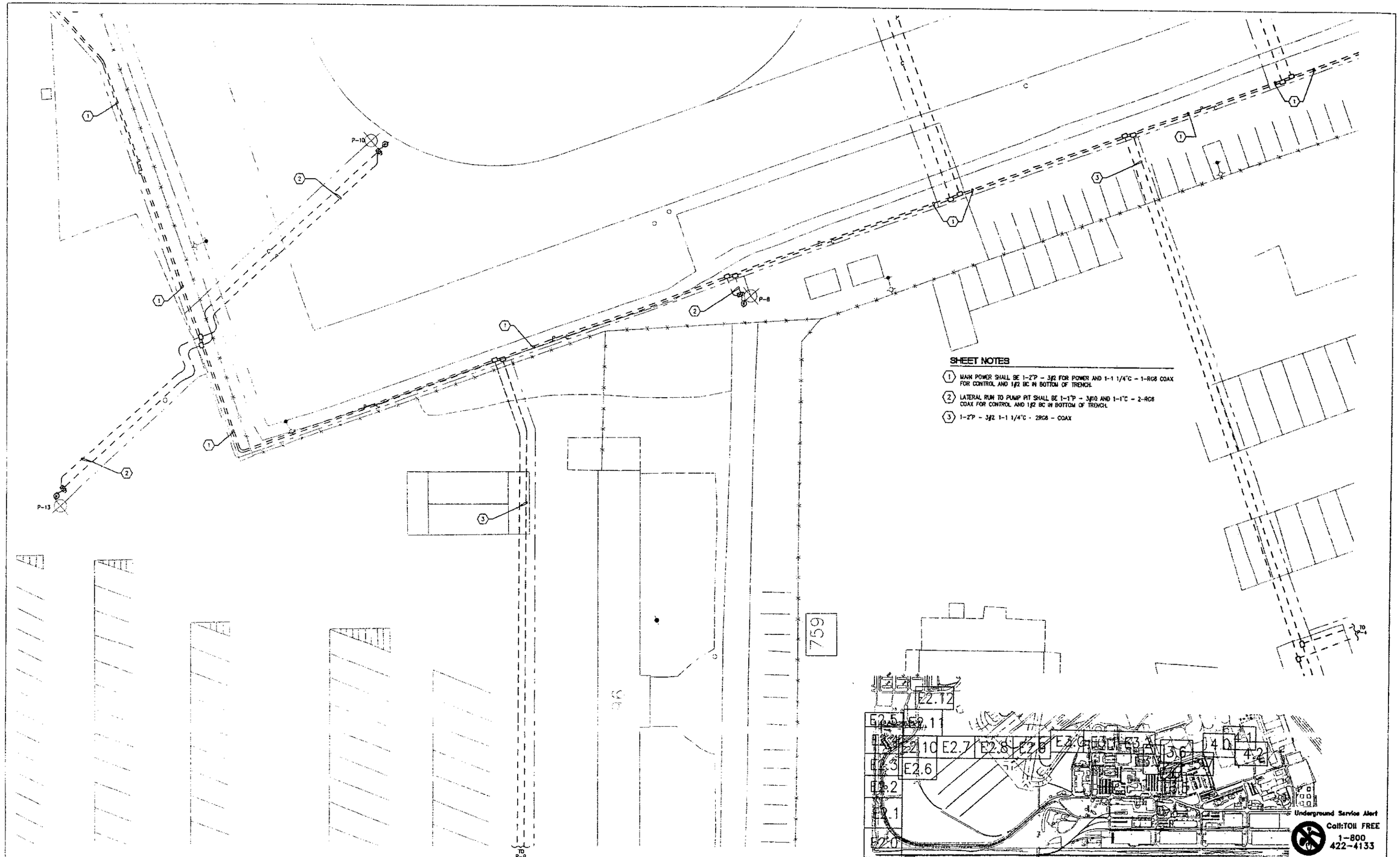

SHEET NOTES

1. MAIN POWER SHALL BE 1-2"P - 3#2 FOR POWER AND 1-1 1/4"C - 1-RG6 COAX FOR CONTROL AND 1#2 BC IN BOTTOM OF TRENCH.
2. LATERAL RUN TO PUMP PIT SHALL BE 1-1"P - 3#10 AND 1-1"C - 2-RG6 COAX FOR CONTROL AND 1#2 BC IN BOTTOM OF TRENCH.
3. 1-2"P - 3#2 1-1 1/4"C - 2RG6 - COAX

Underground Service Alert
Call:TOll FREE
1-800
422-4133

NO.	DATE	APPR.	REVISION
0	2/9/05	ER	FINAL 100% DESIGN/ISSUED FOR CONSTRUCTION
0	11/3/04	ER	REVISION C 100% DRAFT DESIGN SUBMITTAL
0	10/15/04	ER	100% DESIGN
0	5/10/04	ER	REVISION B 90% DESIGN REVIEW
0	2/16/04	ER	REVISION A 90% DESIGN SUBMITTAL

DEPARTMENT OF THE NAVY
SOUTHWEST DIVISION
San Diego California

WESTON SOLUTIONS
Walnut Creek California

CHECKED	-	DATE	CLIENT APPROVALS
DES. ENG.	-		
PROJ. ENG.	-		
PROJ. MGR.	-		
APPROVED	-		
APPROVED	-		ISSUED FOR

REGISTERED PROFESSIONAL ENGINEER
EDWARD A. RITO
No. E 2294
Exp. 9-30-05
ELECTRICAL
STATE OF CALIFORNIA

ELECTRICAL SITE PLAN -
TRANSFORMER #2 AREA
REMEDIAL DESIGN SHALLOW GROUNDWATER UNIT REMEDY

DRAWN	DATE	DWG. NO.	REV. NO.
ER/RY	JANUARY, 14 2004	E-3.4	A
SCALE 1"=20'	W.O. NO. 12954002004001020/JRA 4120	SHT. - OF -	

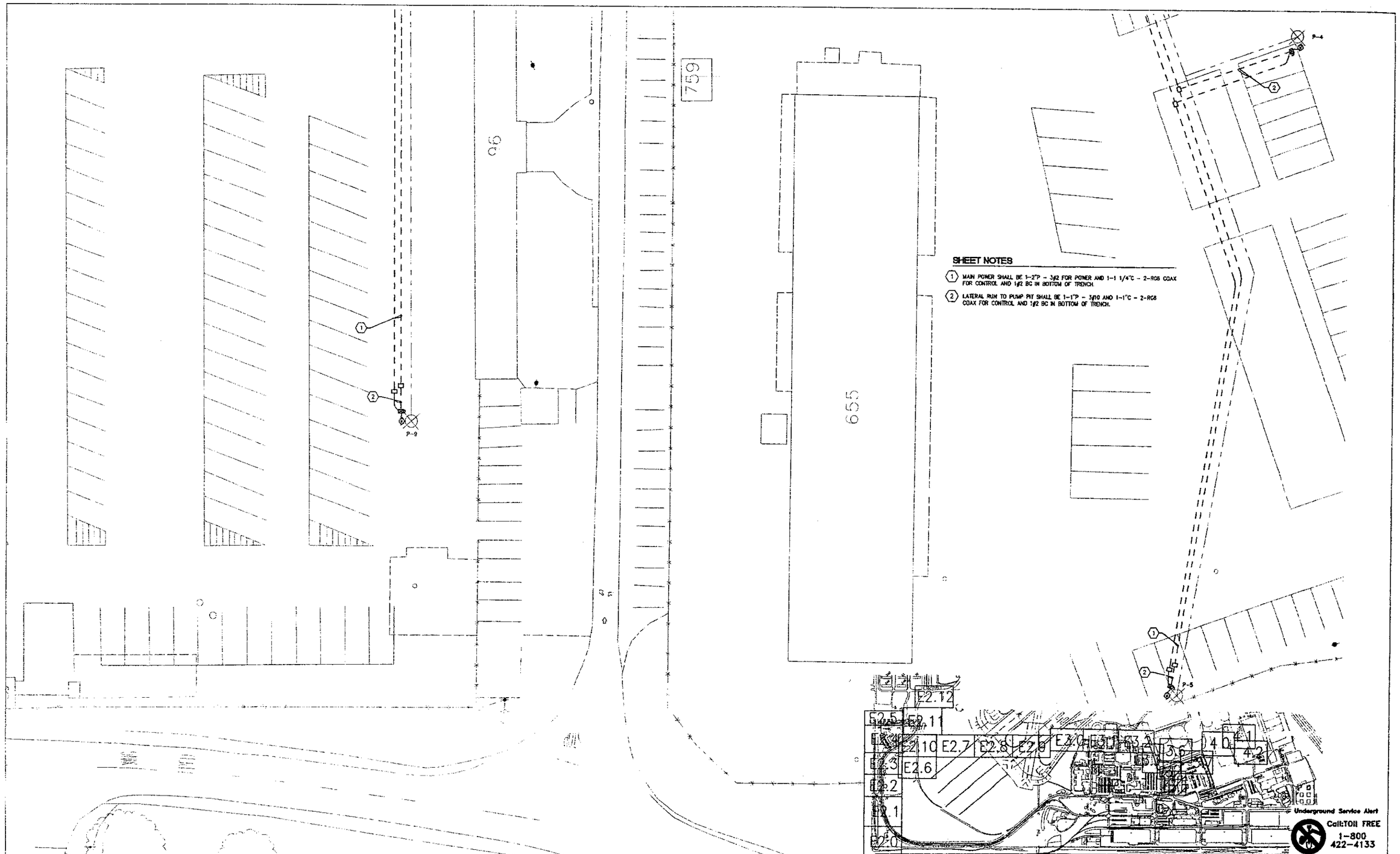

SHEET NOTES

1. MAIN POWER SHALL BE 1-2"P - 3#2 FOR POWER AND 1-1 1/4"C - 2-RG8 COAX FOR CONTROL AND 1#2 BC IN BOTTOM OF TRENCH.
2. LATERAL RUN TO PUMP PIT SHALL BE 1-1"P - 3#10 AND 1-1"C - 2-RG8 COAX FOR CONTROL AND 1#2 BC IN BOTTOM OF TRENCH.

NO.	DATE	APPR.	REVISION	NO.	DATE	APPR.	REVISION
				0	12/8/05	ER	FINAL 100% DESIGN/ISSUED FOR CONSTRUCTION
				0	11/3/04	ER	REVISION C 100% DRAFT DESIGN SUBMITTAL
				0	08/15/04	ER	100% DESIGN
				0	5/10/04	ER	REVISION B 90% DESIGN REVIEW
				0	2/16/04	ER	REVISION A 90% DESIGN SUBMITTAL

DEPARTMENT OF THE NAVY
SOUTHWEST DIVISION
San Diego California

WESTON SOLUTIONS
Walnut Creek California

CHECKED	DATE	CLIENT APPROVALS	DATE
DES. ENG.			
PROJ. ENG.			
PROJ. MGR.			
APPROVED			
APPROVED		ISSUED FOR	DATE

Edmund A. Ritter
REGISTERED PROFESSIONAL ENGINEER
EDMUND A. RITTO
No. E 8286
Exp. 6-30-06
ELECTRICAL
STATE OF CALIFORNIA

ELECTRICAL SITE PLAN -
TRANSFORMER #2 AREA
REMEDIAL DESIGN SHALLOW GROUNDWATER UNIT REMEDY

DRAWN	DATE	DWG. NO.	REV. NO.
ER/RY	JANUARY, 14 2004	E-3.5	A
SCALE	W.O. NO.	SHT. - OF -	
1"=20'	12954002004001020/JRA 4120		

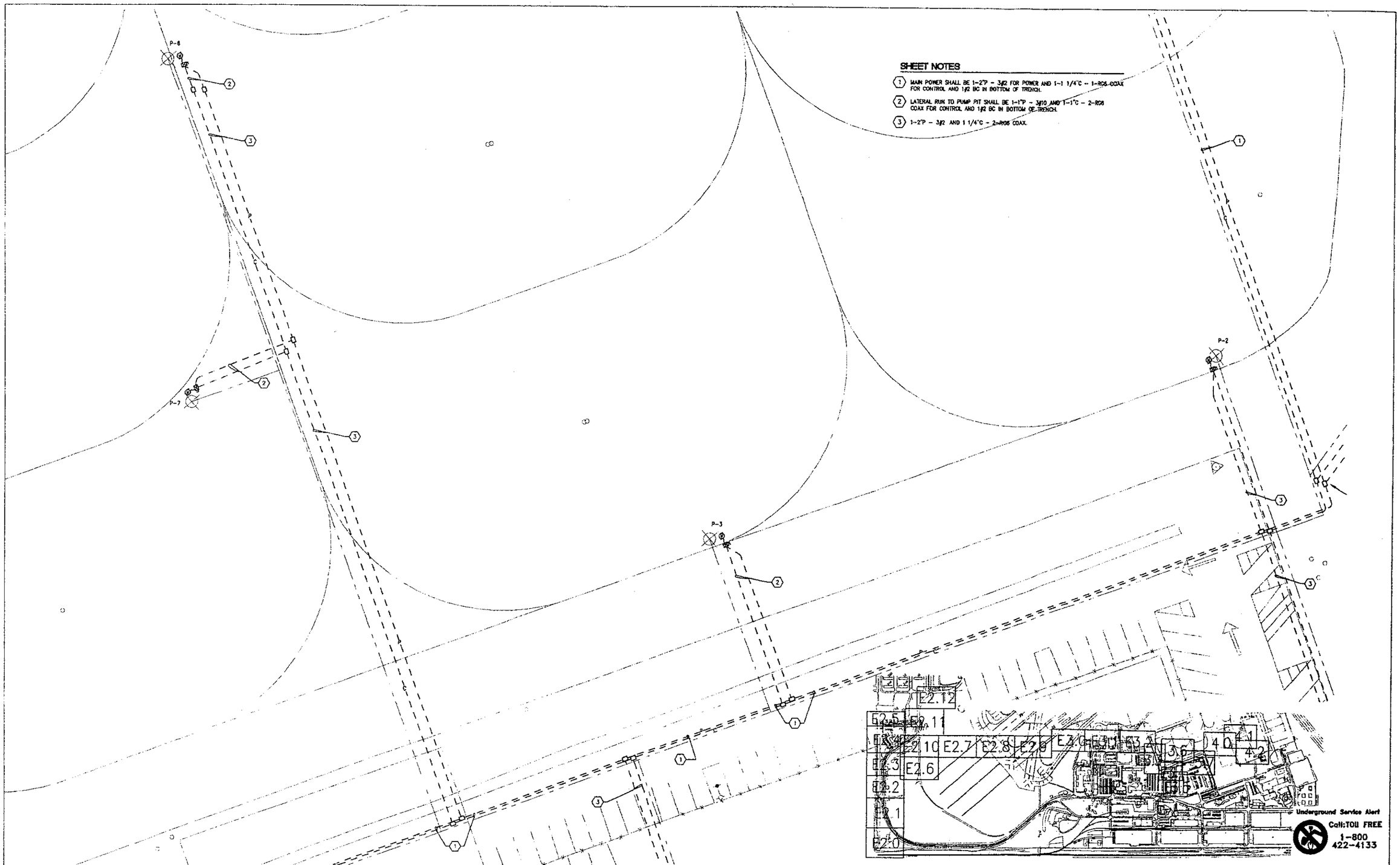

SHEET NOTES

1. MAIN POWER SHALL BE 1-2"P - 3#2 FOR POWER AND 1-1 1/4"C - 1-RG6 COAX FOR CONTROL AND 1#2 BC IN BOTTOM OF TRENCH.
2. LATERAL RUN TO PUMP PIT SHALL BE 1-1"P - 3#10 AND 1-1"C - 2-RG6 COAX FOR CONTROL AND 1#2 BC IN BOTTOM OF TRENCH.
3. 1-2"P - 3#2 AND 1 1/4"C - 2-RG6 COAX.

NO.	DATE	APPR.	REVISION
0	2/9/05	ER	FINAL 100% DESIGN/ISSUED FOR CONSTRUCTION
0	11/3/04	ER	REVISION C 100% DRAFT DESIGN SUBMITTAL
0	10/15/04	ER	100% DESIGN
0	5/10/04	ER	REVISION B 90% DESIGN REVIEW
0	2/16/04	ER	REVISION A 90% DESIGN SUBMITTAL

DEPARTMENT OF THE NAVY
SOUTHWEST DIVISION
San Diego California

WESTON SOLUTIONS

CHECKED	DATE	CLIENT APPROVALS	DATE
DES. ENG.			
PROJ. ENG.			
PROJ. MGR.			
APPROVED			
APPROVED		ISSUED FOR	DATE

REGISTERED PROFESSIONAL ENGINEER
EDWARD A. RITO
No. E 8204
Exp. 9-30-05
ELECTRICAL
STATE OF CALIFORNIA

ELECTRICAL SITE PLAN -
TRANSFORMER #2 AREA
REMEDIAL DESIGN SHALLOW GROUNDWATER UNIT REMEDY

DRAWN	DATE	DWG. NO.	REV. NO.
ER/RY	JANUARY, 14 2004	E-3.6	A
SCALE 1"=20'	W.O. NO. 12954002004001020/JRA 4120	SHT. - OF -	

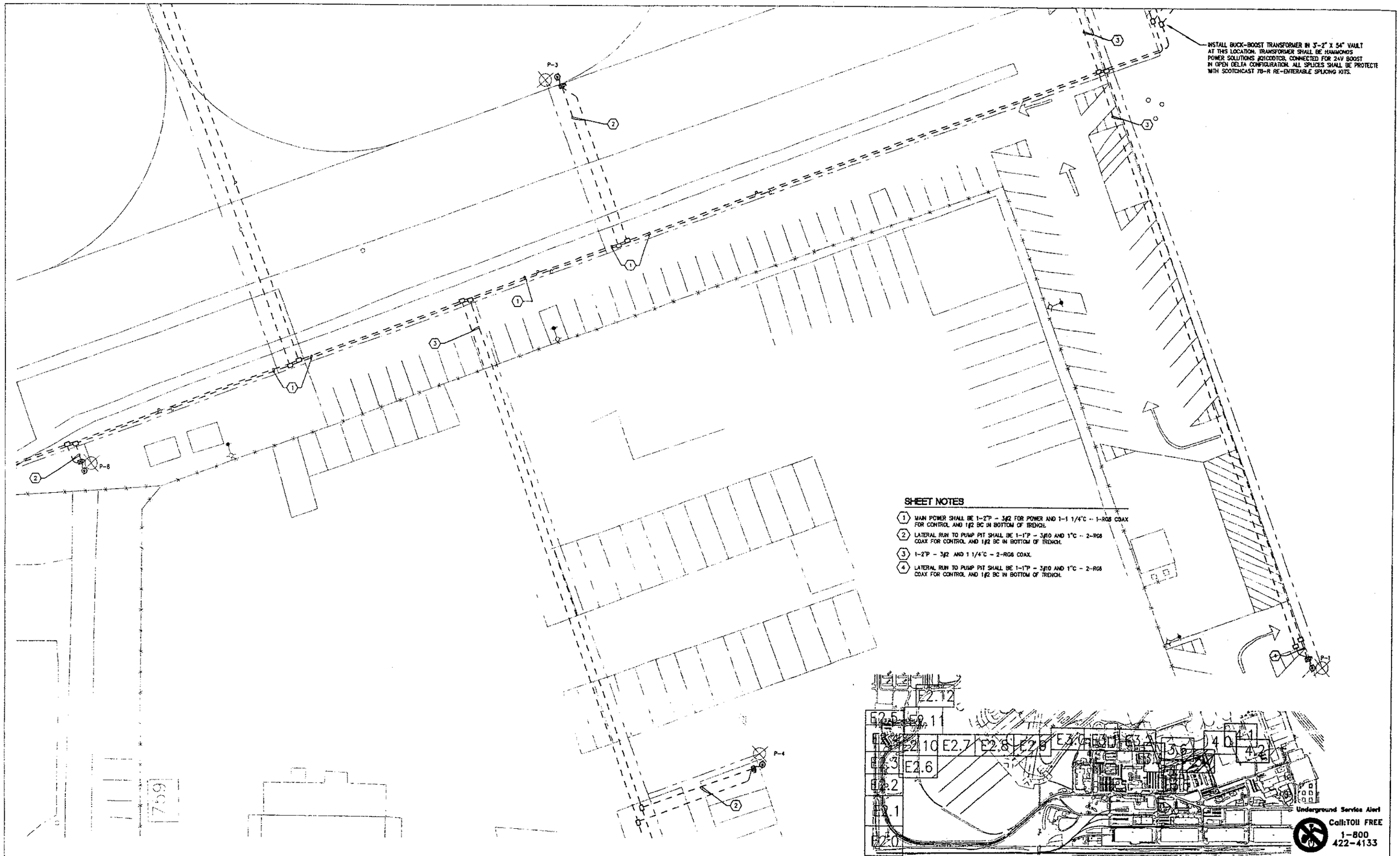

SHEET NOTES

1. MAIN POWER SHALL BE 1-2"P - 3#2 FOR POWER AND 1-1 1/4"C - 1-RG8 COAX FOR CONTROL AND 1#2 BC IN BOTTOM OF TRENCH.
2. LATERAL RUN TO PUMP PIT SHALL BE 1-1"P - 3#10 AND 1"C - 2-RG8 COAX FOR CONTROL AND 1#2 BC IN BOTTOM OF TRENCH.
3. 1-2"P - 3#2 AND 1 1/4"C - 2-RG8 COAX.
4. LATERAL RUN TO PUMP PIT SHALL BE 1-1"P - 3#10 AND 1"C - 2-RG8 COAX FOR CONTROL AND 1#2 BC IN BOTTOM OF TRENCH.

NO.	DATE	APPR.	REVISION	NO.	DATE	APPR.	REVISION
				0	2/9/05	ER	FINAL 100% DESIGN/ISSUED FOR CONSTRUCTION
				0	11/3/04	ER	REVISION C 100% DRAFT DESIGN SUBMITTAL
				0	10/15/04	ER	100% DESIGN
				0	5/10/04	ER	REVISION B 90% DESIGN REVIEW
				0	2/14/04	ER	REVISION A 90% DESIGN SUBMITTAL

DEPARTMENT OF THE NAVY
SOUTHWEST DIVISION
San Diego California

WESTON SOLUTIONS
Walnut Creek California

CHECKED	–	DATE	–
DES. ENG.	–	–	–
PROJ. ENG.	–	–	–
PROJ. MGR.	–	–	–
APPROVED	–	–	–
APPROVED	–	–	–

CLIENT APPROVALS — DATE
ISSUED FOR — DATE

REGISTERED PROFESSIONAL ENGINEER
EDWARD A. RITO
No. E 8294
Exp. 9-30-06
ELECTRICAL
STATE OF CALIFORNIA

ELECTRICAL SITE PLAN – TRANSFORMER #2 AREA

REMEDIAL DESIGN SHALLOW GROUNDWATER UNIT REMEDY

DRAWN	DATE	DWG. NO.	REV. NO.
ER/RY	JANUARY, 14 2004	E-3.7	A
SCALE 1"=20'	W.O. NO. 12954002004001020/JRA 4120	SHT. – OF –	

SHEET NOTES

1. MAIN POWER SHALL BE 1-2"P - 3#2 FOR POWER AND 1-1 1/4"C - 1-RG6 COAX FOR CONTROL AND 1#2 BC IN BOTTOM OF TRENCH.
2. LATERAL RUN TO PUMP PIT SHALL BE 1-1"P - 6#10 AND 1"C - 2-RG6 COAX FOR CONTROL AND 1#2 BC IN BOTTOM OF TRENCH.
3. 1-2"P - 3#2, AND 1 1/4"C - 2-RG6 COAX.

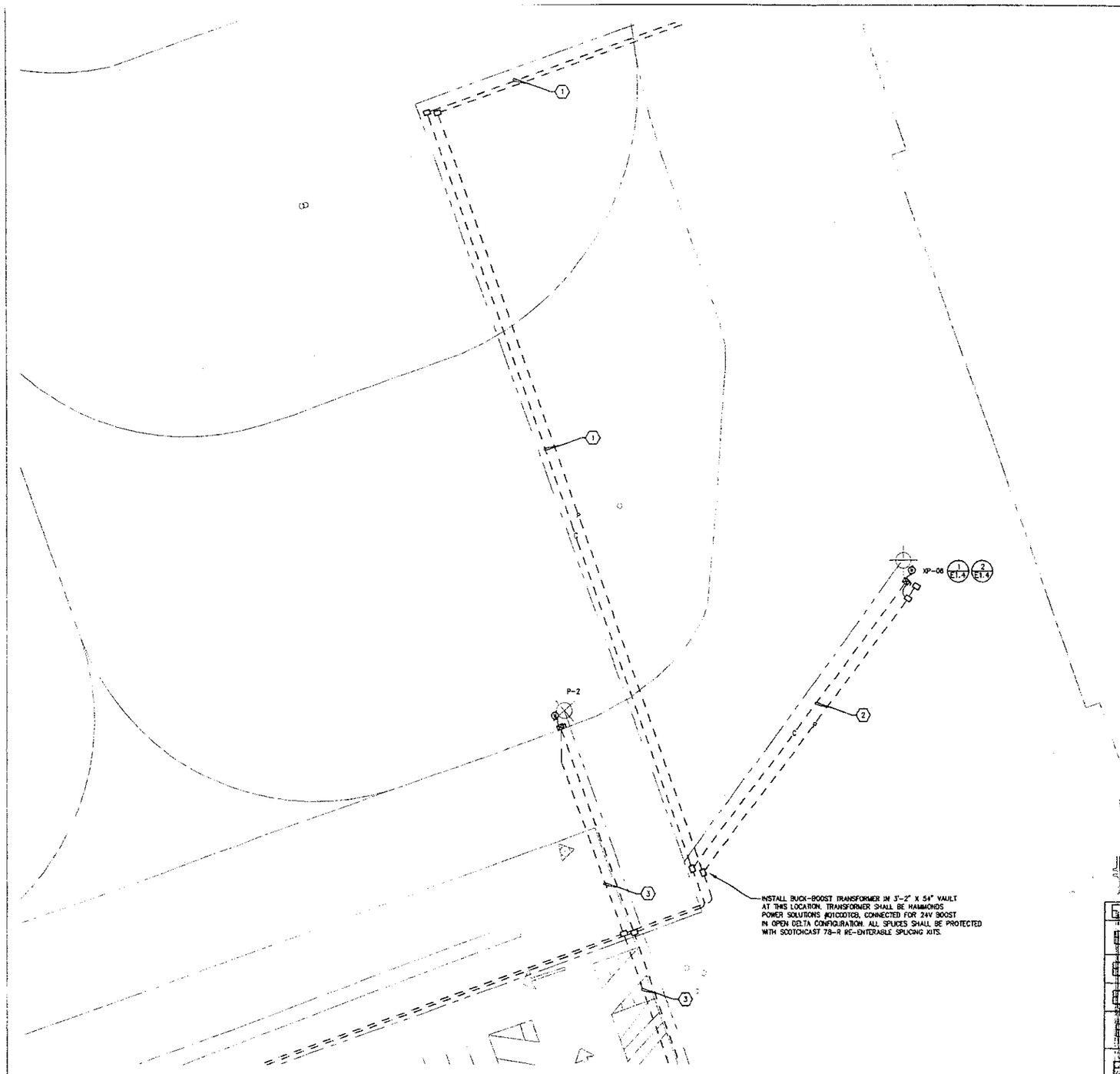

759

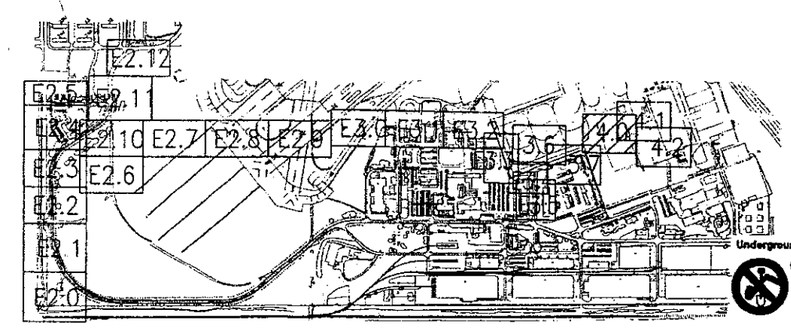

Underground Service Alert
Call:TOll FREE
1-800
422-4133

NO.	DATE	APPR.	REVISION	NO.	DATE	APPR.	REVISION
				0	2/9/05	ER	FINAL 100% DESIGN/ISSUED FOR CONSTRUCTION
				0	11/3/04	ER	REVISION C 100% DRAFT DESIGN SUBMITTAL
				0	10/15/04	ER	100% DESIGN
				0	5/10/04	ER	REVISION B 90% DESIGN REVIEW
				0	2/16/04	ER	REVISION A 90% DESIGN SUBMITTAL

DEPARTMENT OF THE NAVY
SOUTHWEST DIVISION
San Diego California

WESTON SOLUTIONS
Walnut Creek California

CHECKED	DATE	CLIENT APPROVALS	DATE
DES. ENG.			
PROJ. ENG.			
PROJ. MGR.			
APPROVED			
APPROVED		ISSUED FOR	DATE

REGISTERED PROFESSIONAL ENGINEER
EDWARD A. RITO
No. E 8384
Exp. 6-30-06
ELECTRICAL
STATE OF CALIFORNIA

ELECTRICAL SITE PLAN -
TRANSFORMER #2 AREA
REMEDIAL DESIGN SHALLOW GROUNDWATER UNIT REMEDY

DRAWN	DATE	DWG. NO.	REV. NO.
ER/RY	JANUARY, 14 2004	E-4.0	A
SCALE 1"=20'	W.O. NO. 12954002004001020/JRA 4120	SHT. - OF -	

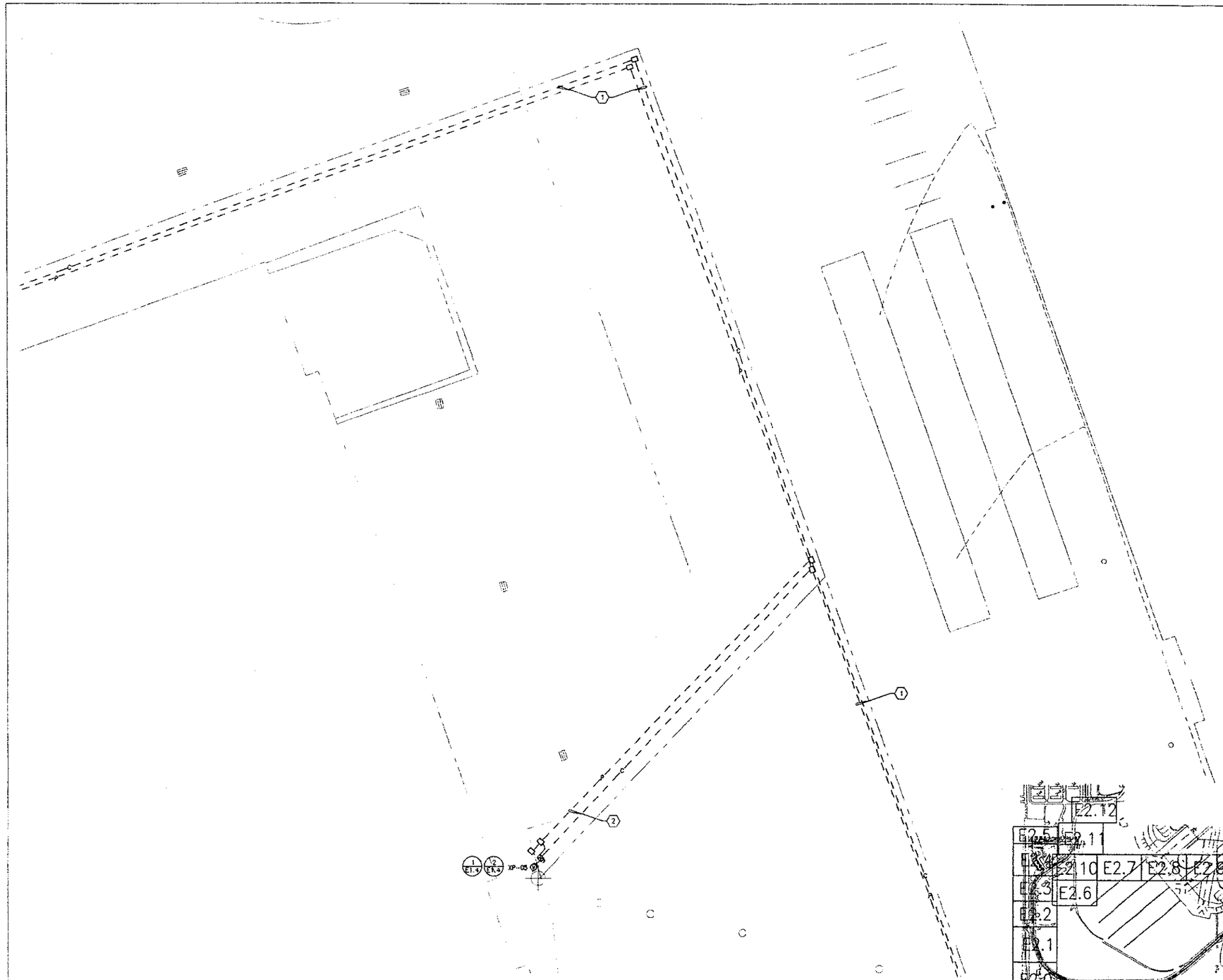

SHEET NOTES

1. MAIN POWER SHALL BE 1-2"P - 3#2 FOR POWER AND 1-1 1/4"C - 1-RG8 COAX FOR CONTROL AND 1#2 BC IN BOTTOM OF TRENCH.
2. LATERAL RUN TO PUMP PIT SHALL BE 1-1"P - 6#10 AND 1"C - 2-RG8 COAX FOR CONTROL AND 1#2 BC IN BOTTOM OF TRENCH.

296

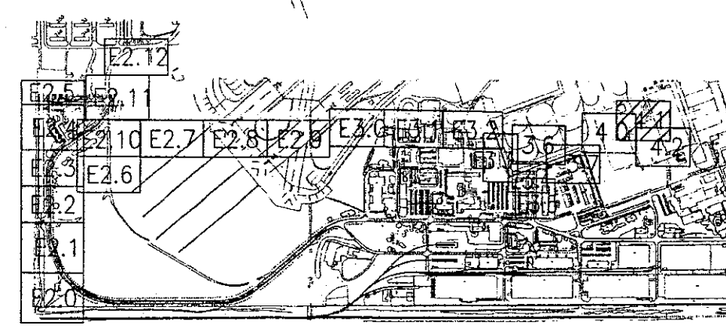

Underground Service Alert
Call:TOll FREE
1-800
422-4133

NO.	DATE	APPR.	REVISION	NO.	DATE	APPR.	REVISION
				0	2/9/05	ER	FINAL 100% DESIGN/ISSUED FOR CONSTRUCTION
				0	11/3/04	ER	REVISION C 100% DRAFT DESIGN SUBMITTAL
				0	10/15/04	ER	100% DESIGN
				0	5/10/04	ER	REVISION B 90% DESIGN REVIEW
				0	2/18/04	ER	REVISION A 90% DESIGN SUBMITTAL

DEPARTMENT OF THE NAVY
SOUTHWEST DIVISION
San Diego California

WESTON SOLUTIONS

CHECKED		DATE	CLIENT APPROVALS	DATE
DES. ENG.				
PROJ. ENG.				
PROJ. MGR.				
APPROVED				
APPROVED			ISSUED FOR	DATE

REGISTERED PROFESSIONAL ENGINEER
EDWARD A. RITO
No. E 8294
Exp. 9-30-06
ELECTRICAL
STATE OF CALIFORNIA

ELECTRICAL SITE PLAN -
TRANSFORMER #2 AREA
REMEDIAL DESIGN SHALLOW GROUNDWATER UNIT REMEDY

DRAWN ER/RY	DATE JANUARY, 14 2004	DWG. NO. E-4.1	REV. NO. A
SCALE 1"=20'	N.O. NO. 12954002004001020/JRA 4120	SHT. - OF -	

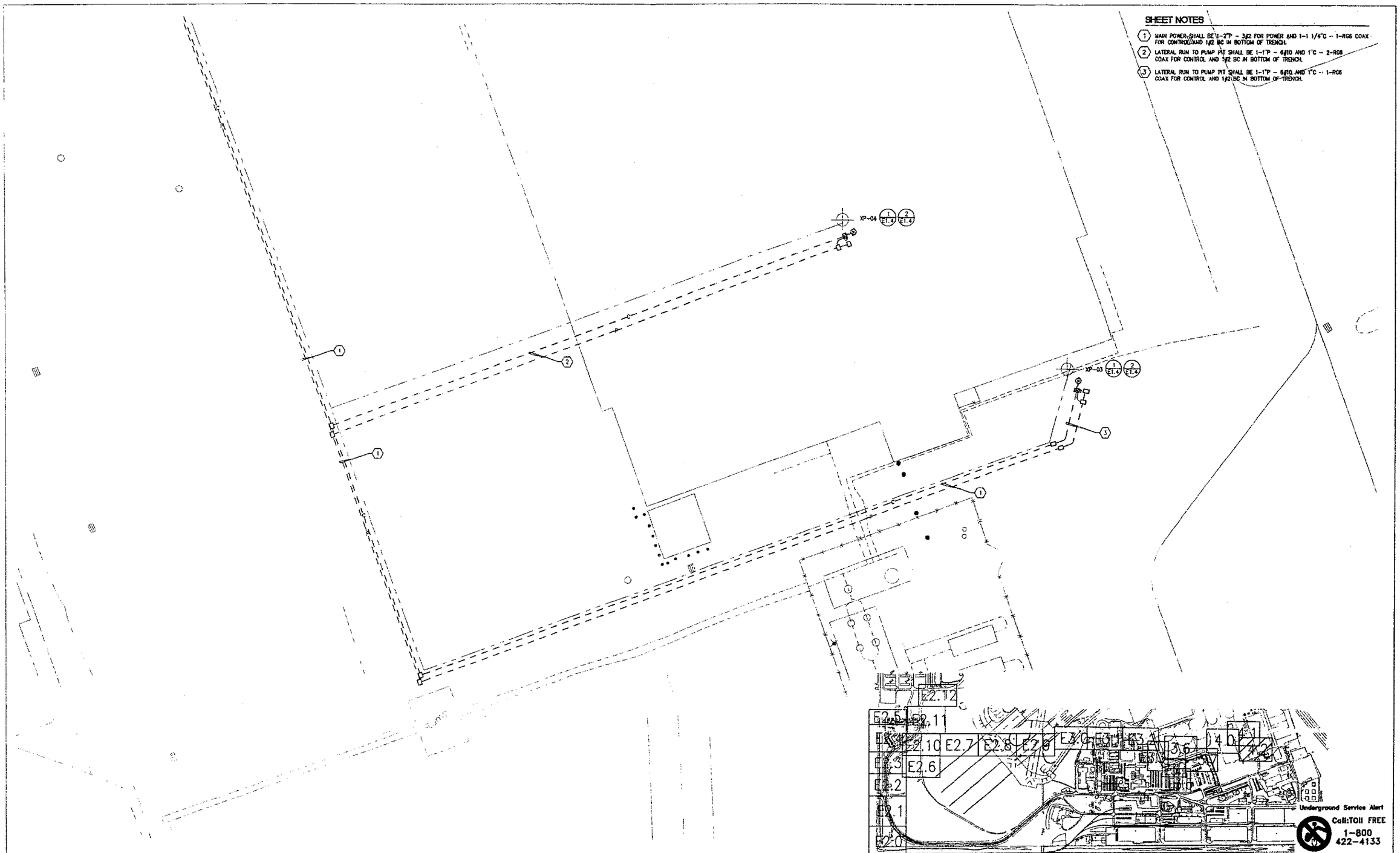

SHEET NOTES

1. MAIN POWER SHALL BE 1-2"P - 3#2 FOR POWER AND 1-1 1/4"C - 1-RG6 COAX FOR CONTROL AND 1#2 BC IN BOTTOM OF TRENCH.
2. LATERAL RUN TO PUMP PIT SHALL BE 1-1"P - 6#10 AND 1"C - 2-RG6 COAX FOR CONTROL AND 1#2 BC IN BOTTOM OF TRENCH.
3. LATERAL RUN TO PUMP PIT SHALL BE 1-1"P - 6#10 AND 1"C - 1-RG6 COAX FOR CONTROL AND 1#2 BC IN BOTTOM OF TRENCH.

NO.	DATE	APPR.	REVISION
0	2/8/03	ER	FINAL 100% DESIGN/ISSUED FOR CONSTRUCTION
0	11/3/04	ER	REVISION C 100% DRAFT DESIGN SUBMITTAL
0	10/15/04	ER	100% DESIGN
0	5/10/04	ER	REVISION B 90% DESIGN REVIEW
0	2/18/04	ER	REVISION A 90% DESIGN SUBMITTAL

DEPARTMENT OF THE NAVY
SOUTHWEST DIVISION
San Diego California

WESTON SOLUTIONS
Walnut Creek California

CHECKED	DATE	CLIENT APPROVALS	DATE
DCL ENG.			
PROJ. ENG.			
PROJ. MGR.			
APPROVED			
APPROVED		ISSUED FOR	DATE

REGISTERED PROFESSIONAL ENGINEER
EDWARD A. RITO
No. E 8304
Exp. 9-30-06
ELECTRICAL
STATE OF CALIFORNIA

ELECTRICAL SITE PLAN -
TRANSFORMER #2 AREA
REMEDIAL DESIGN SHALLOW GROUNDWATER UNIT REMEDY

DRAWN	DATE	DWG. NO.	REV. NO.
ER/RY	JANUARY, 14 2004	E-4.2	A
SCALE 1"=20	W.O. NO. 1295400200400102D/JRA 4120	SHT. - OF -	

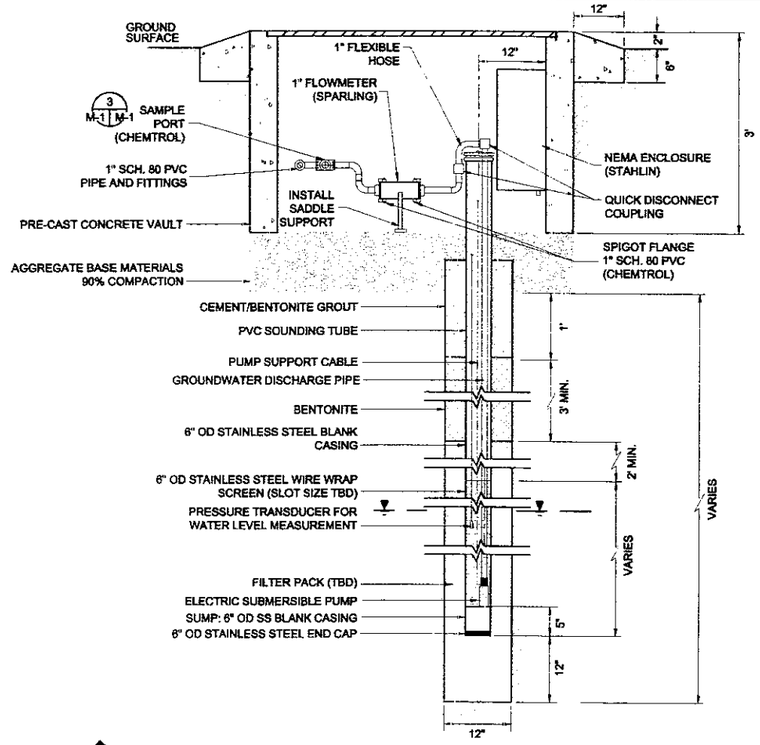

A M-1 M-1 TYPICAL GROUNDWATER EXTRACTION WELL VAULT SECTION

NOT TO SCALE

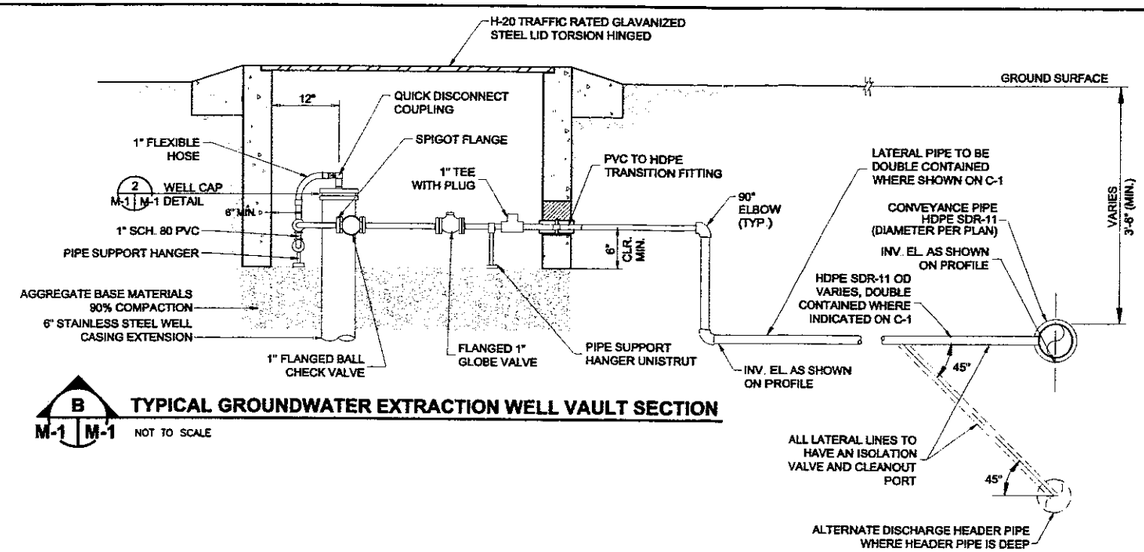

B M-1 M-1 TYPICAL GROUNDWATER EXTRACTION WELL VAULT SECTION

NOT TO SCALE

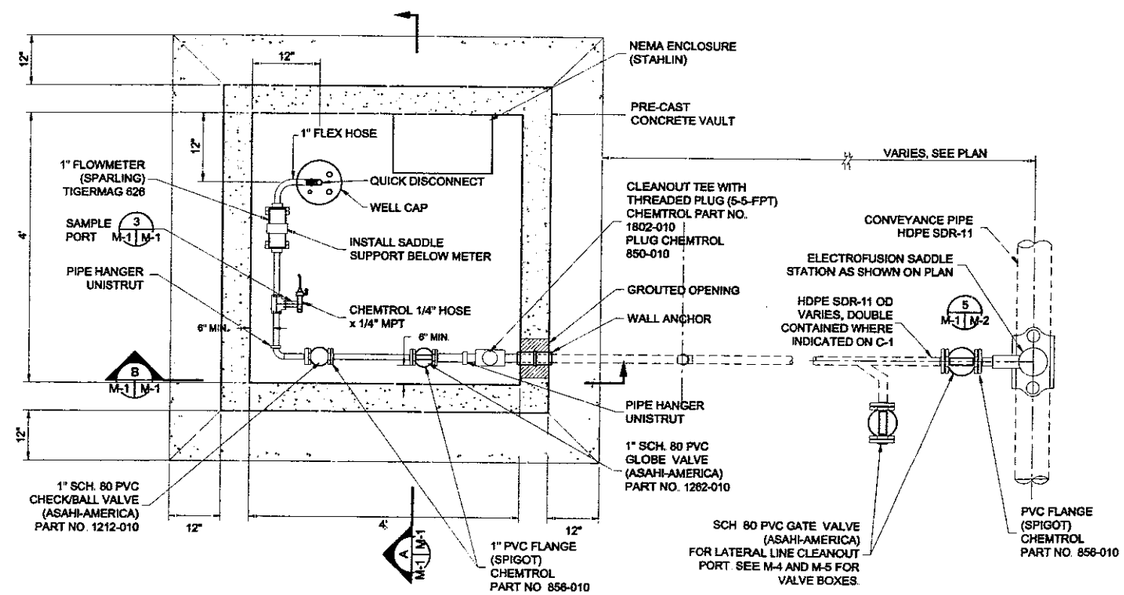

1 C-11 M-1 TYPICAL GROUNDWATER EXTRACTION WELL VAULT PLAN MECHANICAL LAYOUT

NOT TO SCALE

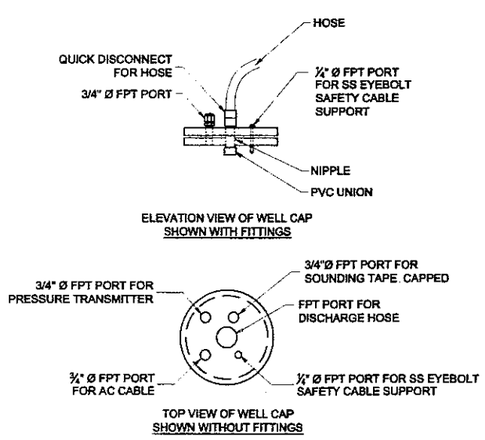

NOTE

1 6" DIA. WELL CAP SHALL BE RATED FOR ANSI #150.

2 M-1 M-1 WELL CAP DETAIL

NOT TO SCALE

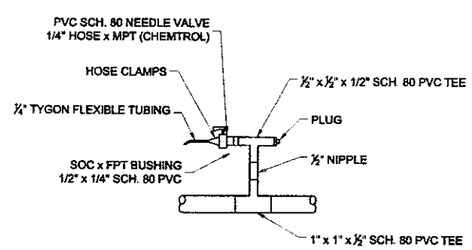

3 M-1 M-1 SAMPLE PORT SECTION

NOT TO SCALE

SOURCE: EARTHTECH, INC. 60% DESIGN SUBMITTAL, REMEDIAL DESIGN SHALLOW GROUNDWATER UNIT REMEDY, IRP SITE 9, DECEMBER 2003, NAVAL FACILITIES ENGINEERING COMMAND CONTRACT N62472-94-C-1884

Underground Service Alert
Call: TOLL FREE 1-800 422-4133
TWO WORKING DAYS BEFORE YOU DIG

NO	DATE	APPR	REVISION	NO	DATE	APPR	REVISION
A	11/04		90% DESIGN SUBMITTAL				
B	10/04		100% DESIGN				
C	3/05		FINAL 100% DESIGN/ISSUED FOR CONSTRUCTION				

DEPARTMENT OF THE NAVY
SOUTHWEST DIVISION
San Diego California

WESTON SOLUTIONS
Walnut Creek California

CHECKED — DATE
DES. ENG. —
PROJ. ENG. —
PROJ. MGR. —
APPROVED —
APPROVED —

CLIENT APPROVALS — DATE
ISSUED FOR — DATE

REGISTERED GEOLOGIST No. C308 Exp. 10/31/05 STATE OF CALIFORNIA

GROUNDWATER EXTRACTION WELLS AND WELL-VAULT DETAILS

REMEDIAL DESIGN SHALLOW GROUNDWATER UNIT REMEDY

DRAWN	DATE	DWG. NO	REV. NO
D.C.H.	JANUARY 2004	M-1	C
SCALE AS NOTED	W.O. NO. 1395400200400 1020	SHT. — OF —	

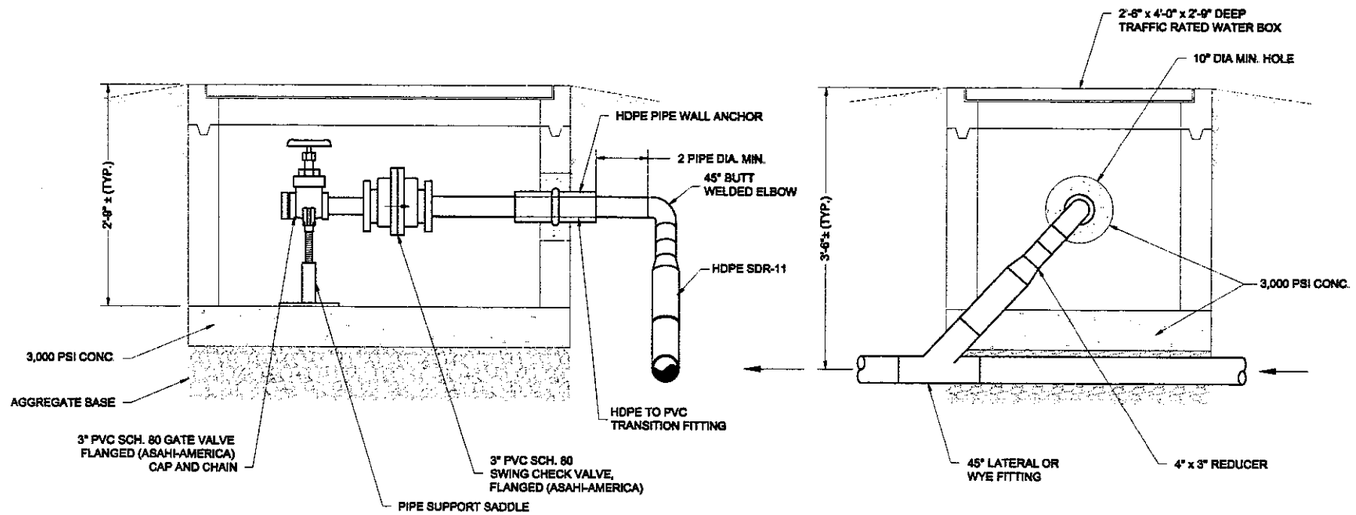

1 C-11 M-2 **FLUSHING PORT DETAIL**
NOT TO SCALE

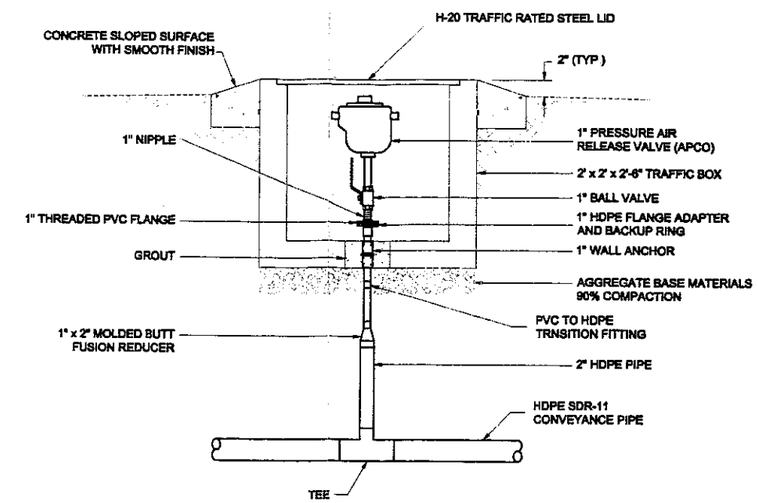

4 C-5 M-2 **TYPICAL AIR RELEASE VALVE**
NOT TO SCALE

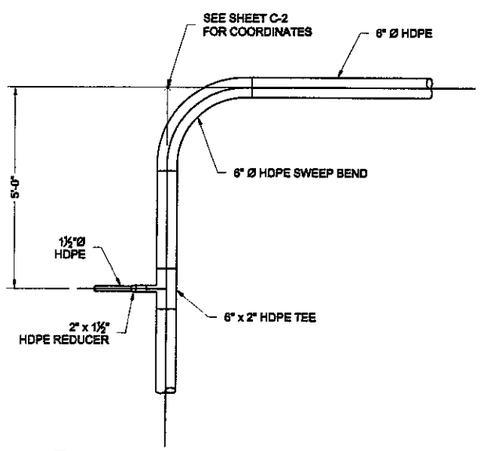

2 C-2 M-2 **HORIZONTAL ANGLE POINT DETAIL**
NOT TO SCALE

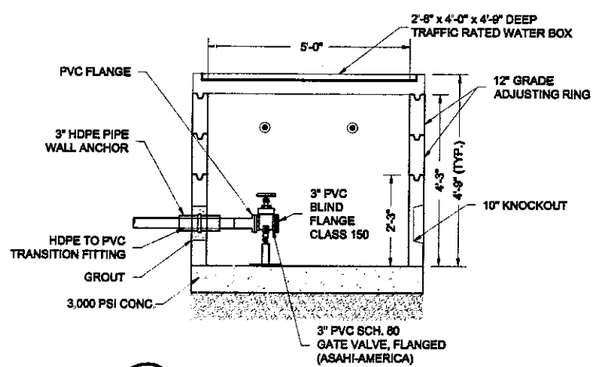

3 C-2 M-2 **BLIND FLANGE, END LINE A - DETAIL**
NOT TO SCALE

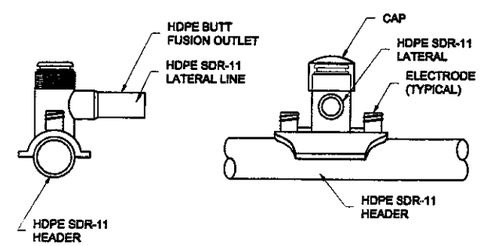

5 M-1 M-2 **ELECTROFUSION TAPPING TEE**
NOT TO SCALE

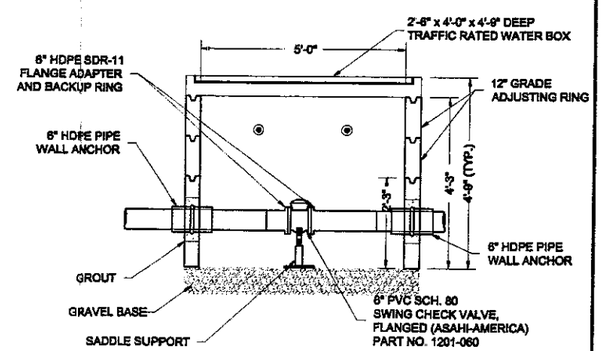

6 C-2 M-2 **CHECK VALVE VAULT DETAIL**
NOT TO SCALE

SOURCE:
EARTH TECH, INC. 60% DESIGN SUBMITTAL, REMEDIAL DESIGN SHALLOW GROUNDWATER UNIT REMEDY, IRP SITE 24, DECEMBER 2003, NAVAL FACILITIES ENGINEERING COMMAND CONTRACT N6272-94-D-0048.

Underground Service Alert
CONTOUR FREE
1-800-422-4133
TWO WORKING DAYS BEFORE YOU DIG

NO	DATE	APPR	REVISION	NO.	DATE	APPR	REVISION
A	1/04		90% DESIGN SUBMITTAL				
B	10/04		100% DESIGN				
C	2/05		FINAL 100% DESIGN/ISSUED FOR CONSTRUCTION				

DEPARTMENT OF THE NAVY
SOUTHWEST DIVISION
San Diego California

WESTON SOLUTIONS
Walnut Creek California

CHECKED	DATE	CLIENT APPROVALS	DATE
GES. ENG.			
PROJ. ENG.			
PROJ. MGR.			
APPROVED			
APPROVED		ISSUED FOR	DATE

MECHANICAL DETAILS

REMEDIAL DESIGN SHALLOW GROUNDWATER UNIT REMEDY

DRAWN	DATE	DWG. NO.	REV. NO.
D.C.H.	JANUARY 2004	M-2	C
SCALE	W.O. NO.	SHT	OF
AS NOTED	13954002004001020		

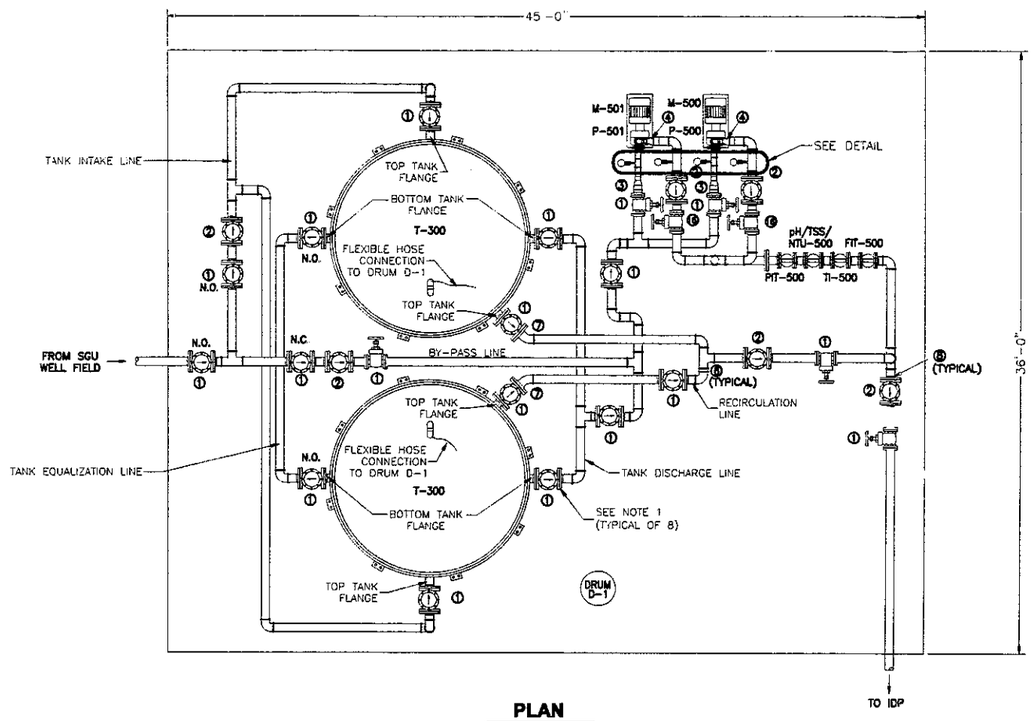

PLAN

SCALE: 1" = 4'

0 2 4 6 8

SCALE IN FEET

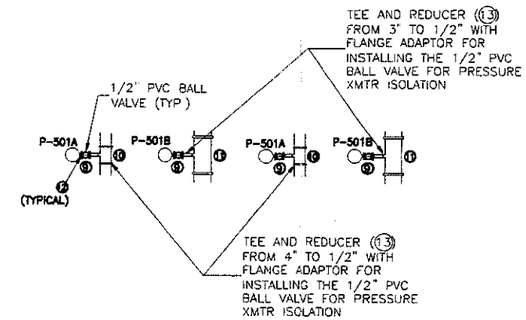

DETAIL

SCALE: 1" = 2'

Item No.	Description	Quantity	Manufacturer	Part No
1	8" PVC Flanged Gate Valve	21	Asahi/America	
2	6" PVC Flanged Swing Check Valve	6	Asahi/America	
3	6" to 4" PVC Concentric Reducer (Socket)	2	Asahi/America	
4	6" to 3" PVC Concentric Reducer (Socket)	2	Asahi/America	
5	6" 90° PVC Elbows (Socket)	30	Asahi/America	
6	6" PVC "T" Fittings (Socket)	10	Asahi/America	
7	6" PVC 45° Elbow (Socket)	2	Asahi/America	
8	6" PVC Spigot Flange Adapters (Socket)	60	Asahi/America	
9	½" PVC Flanged Ball Valve	4	Asahi/America	
10	4" PVC "T" Fitting (Socket)	2	Asahi/America	
11	3" PVC "T" Fitting (Socket)	2	Asahi/America	
12	½" PVC Spigot Flange Adapter (Socket)	8	Asahi/America	
13	4" to ½" PVC Concentric Reducer (Socket)	2	Asahi/America	
14	3" to ½" PVC Concentric Reducer (Socket)	2	Asahi/America	
15	Pipe Supports	As Required	Unistrut	
16	8" Diaphragm Valve	2	Asahi/America	
PI-500A/501A 500B/501B	Pressure Indicator with Diaphragm Seal	4	Ashcroft	
T-300/301	Double-wall Containment Tank	2	Poly Processing Co. Western Region	Custom Built
M-500/P-500 M-501/P-501	3 x 4-13 Electrical 30 HP Centrifugal Pump	2	Gould Pumps	3656 M & L
PIT-500	Pressure Transmitter	1	Rosemount, Inc.	1151GP7E22B1M4
TI-500	Temperature Transmitter	1	Rosemount, Inc.	644RL1U1A1 with IRR-S-2-14-4A-LT-R-6-1-4 Platinum RTD
FIT-500	6" Flanged Flow Meter Tigermag Model 626	1	Sparling Instruments, Inc.	6" Tigermag Model 626
D-1	24 7/8" OD Carbon Steel Drum for Vapor Scrubbing from T-300/301 Top Vents	1	US Filter	VSC200

NOTE:

1 ALL PIPE CONNECTED TO TANKS T-300/301 SHALL HAVE FLEXIBLE CONNECTIONS

2. ADD PIPE SUPPORTS AS REQ'D IN FIELD.

LEGEND:

FIT	FLOW INDICATOR TRANSMITTER / TOTALIZER
M	MOTOR
P	PUMP
pH/TSS/NTU	pH, TOTAL SUSPENDED SOLIDS, TURBIDITY
PIT	PRESSURE INDICATOR TRANSMITTER
TI	TEMPERATURE INDICATOR
V	VALVE
D	VAPOR SCRUB DRUM

SOURCE:

EARTH TECH, INC. 60% DESIGN SUBMITTAL, REMEDIAL DESIGN SHALLOW GROUNDWATER UNIT REMEDY, IRP SITE 24, DECEMBER 2003, NAVAL FACILITIES ENGINEERING COMMAND CONTRACT N6272-94-D-0048.

REGISTERED PROFESSIONAL ENGINEER — CIVIL — STATE OF CALIFORNIA — Exp. 12/06

Underground Service Alert
Call:Toll FREE
1-800
422-4133
TWO WORKING DAYS BEFORE YOU DIG

NO.	DATE	APPR.	REVISION	NO.	DATE	APPR.	REVISION
A	1/04		90% DESIGN SUBMITTAL				
B	10/04		100% DESIGN				
C	2/05		FINAL 100% DESIGN/ISSUED FOR CONSTRUCTION				

DEPARTMENT OF THE NAVY
SOUTHWEST DIVISION
San Diego California

WESTON SOLUTIONS
Walnut Creek California

CHECKED	DATE	CLIENT APPROVALS	DATE
DES. ENG.			
PROJ. ENG.			
PROJ. MGR.			
APPROVED			
APPROVED		ISSUED FOR	DATE

MECHANICAL DETAILS

REMEDIAL DESIGN SHALLOW GROUNDWATER UNIT REMEDY

DRAWN	DATE	DWG. NO.	REV. NO.
D.C.H.	JANUARY 2004	M-3	C
SCALE	W.O. NO.	SHT.	OF
AS NOTED	12954002004001030		

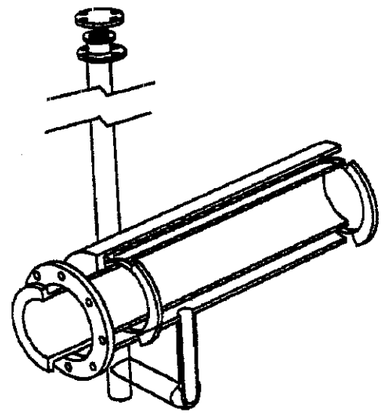

TYPICAL DOUBLE CONTAINMENT END TERMINATION WITH LOW POINT DRAIN AND INSPECTION PORT (2"x4" SDR 11x17 HDPE)

NOT TO SCALE

1 C-10 M-4 1 C-6 M-4

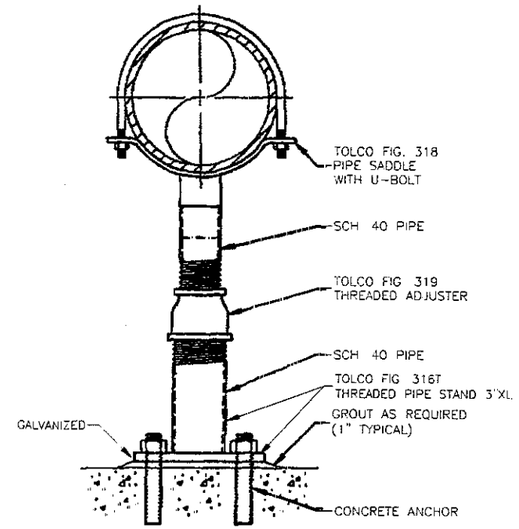

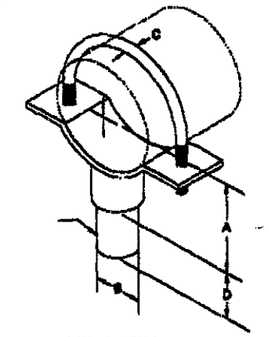

SIZES 4 THRU 6 INCH

TOLCO FIGURE 318
GALVANIZED

PIPE	A	B	C	D
4"	3 13/16	2 3/8	1/2	2 1/2
6'	4 7/8	2 3/8	5/8	2 1/2

PIPE SUPPORT FOR 4-6" PVC SCH 80 PIPE

NOT TO SCALE

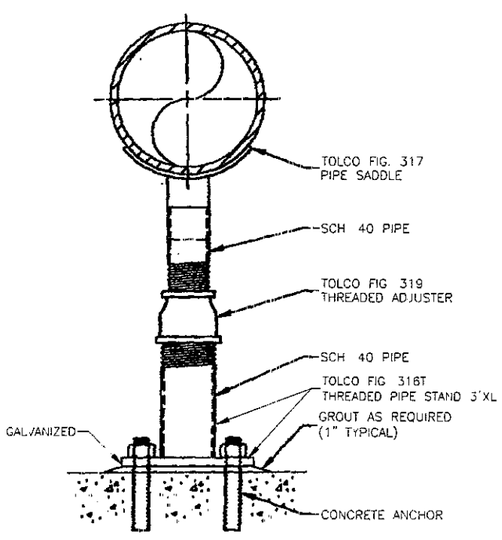

VALVE SUPPORT FOR 4-6" PVC SCH 80 PIPE

NOT TO SCALE

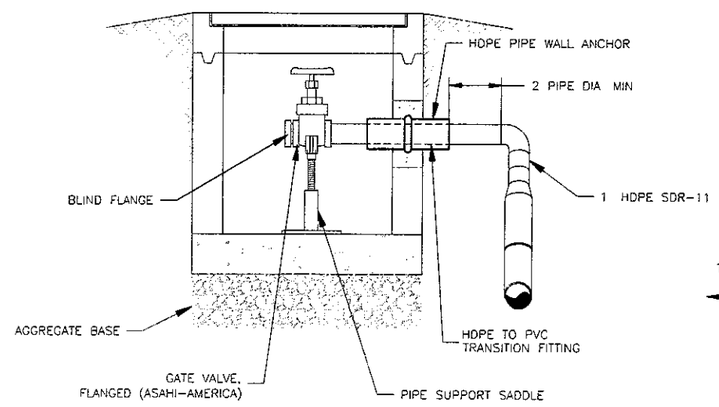

SIDE VIEW

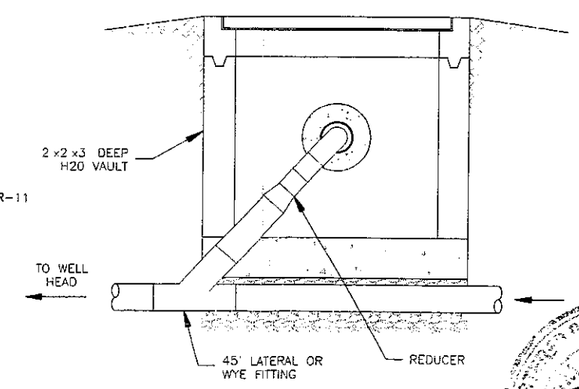

FRONT VIEW

2 C-1 M-4 **LATERAL LINE CLEANOUT PORT**

NOT TO SCALE

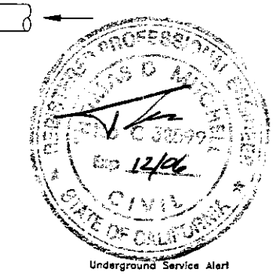

Underground Service Alert
Call:TOll FREE
1-800
422-4133
TWO WORKING DAYS BEFORE YOU DIG

SOURCE:
EARTH TECH, INC. 60% DESIGN SUBMITTAL, REMEDIAL DESIGN SHALLOW GROUNDWATER UNIT REMEDY, IRP SITE 24, DECEMBER 2003, NAVAL FACILITIES ENGINEERING COMMAND CONTRACT N6272-94-D-0048.

NO.	DATE	APPV.	REVISION	NO	DATE	APPR.	REVISION
A	1/04		90% DESIGN SUBMITTAL				
B	10/04		100% DESIGN				
C	2/05		FINAL 100% DESIGN/ISSUED FOR CONSTRUCTION				

DEPARTMENT OF THE NAVY
SOUTHWEST DIVISION
San Diego California

WESTON SOLUTIONS
Walnut Creek California

CHECKED	DATE	CLIENT APPROVALS	DATE
DES. ENG.			
PROJ. ENG.			
PROJ. MGR.			
APPROVED			
APPROVED		ISSUED FOR	DATE

MECHANICAL DETAILS

REMEDIAL DESIGN SHALLOW GROUNDWATER UNIT REMEDY

DRAWN	DATE	DWG. NO.	REV. NO
D.C.H.	JANUARY 2004	M-4	C
SCALE: AS NOTED	W.O. NO.: 12954002004001020	SHT. — OF —	

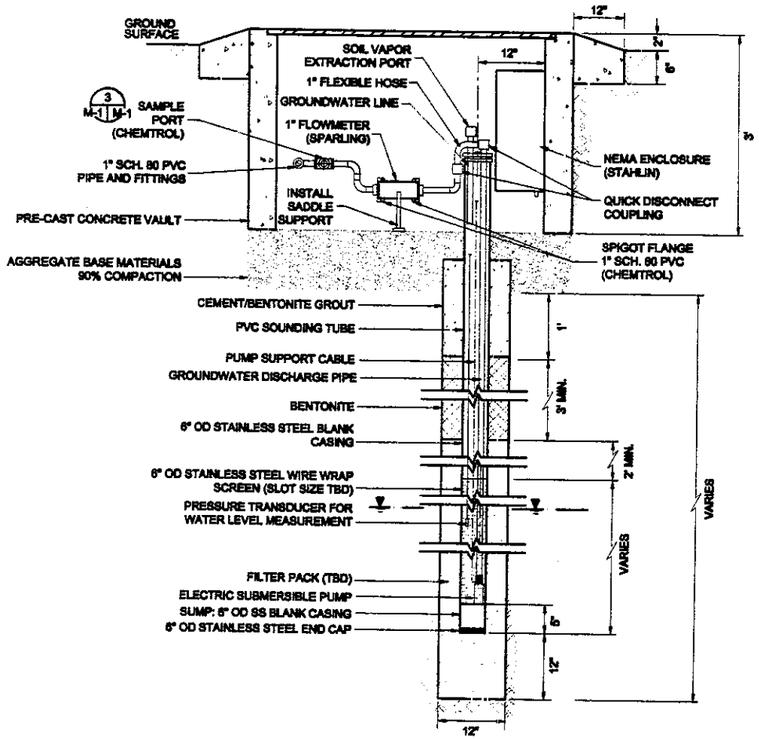

TYPICAL MULTIPHASE EXTRACTION WELL VAULT SECTION

NOT TO SCALE

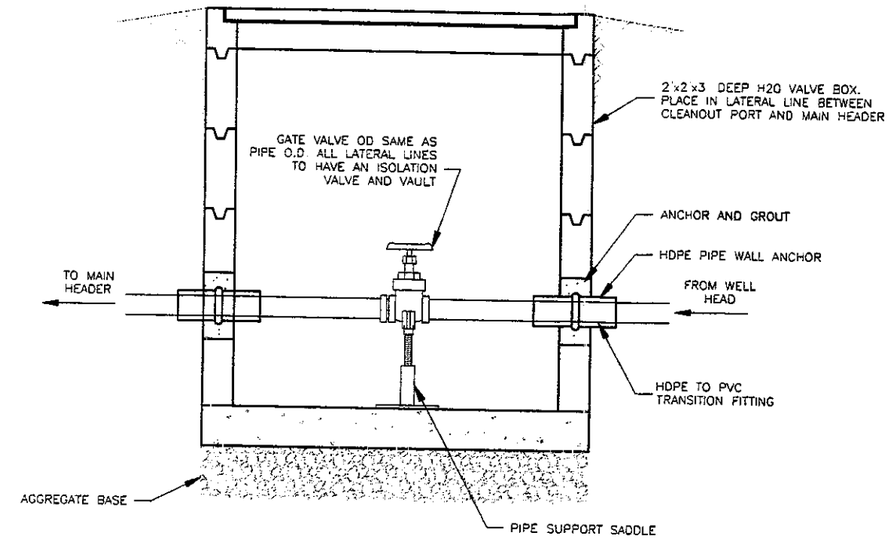

ISOLATION VALVE AND VAULT FOR LATERAL LINE CLEANOUT PORTS

NOT TO SCALE

REGISTERED GEOLOGIST
TRACY WALKER
No. 6209
Exp 10/31/05
STATE OF CALIFORNIA

PVC FLANGE (SPIGOT) CHEMTROL PART NO. 858-010

REGISTERED PROFESSIONAL ENGINEER
DAVID D. MITCHELL
No. 50079
Exp 12/06
CIVIL
STATE OF CALIFORNIA

Underground Service Alert
Call:TOll FREE
1-800
422-4133
TWO WORKING DAYS BEFORE YOU DIG

SOURCE:
EARTH TECH, INC. 60% DESIGN SUBMITTAL, REMEDIAL DESIGN SHALLOW GROUNDWATER UNIT REMEDY, IRP SITE 24, DECEMBER 2003, NAVAL FACILITIES ENGINEERING COMMAND CONTRACT N62472-94-D-0048.

NO.	DATE	APPR.	REVISION	NO	DATE	APPR.	REVISION
A	1/04		90% DESIGN SUBMITTAL				
B	10/04		100% DESIGN				
C	2/05		FINAL 100% DESIGN/ISSUED FOR CONSTRUCTION				

DEPARTMENT OF THE NAVY
SOUTHWEST DIVISION
San Diego California

WESTON SOLUTIONS
Rancho Cordova California

CHECKED	DATE	CLIENT APPROVALS	DATE
DES. ENG.			
PROJ. ENG.			
PROJ. MGR.			
APPROVED			
APPROVED		ISSUED FOR	DATE

MECHANICAL DETAILS

REMEDIAL DESIGN SHALLOW GROUNDWATER UNIT REMEDY

DRAWN	DATE	DWG. NO.	REV. NO.
D.C.H.	JANUARY 2004	M-5	C
SCALE: AS NOTED	W.O. NO. 12954002004001020	SHT. - OF -	

GENERAL NOTES

1. THIS IS A GENERAL LEGEND SHEET. SOME SYMBOLS AND ABBREVIATIONS MAY NOT APPLY TO THIS SPECIFIC PROJECT.

2. THIS LEGEND APPLIES TO P & IDs ONLY AND MAY DIFFER FROM LEGENDS FOR OTHER SHEETS.

3. IN GENERAL THIS LEGEND SHEET AND THE INSTRUMENTATION DIAGRAMS ARE BASED ON INSTRUMENT SOCIETY OF AMERICA STANDARDS FOR PRACTICES FOR INSTRUMENTATION. SOME MODIFICATIONS ADDITIONS AND ALTERATIONS HAVE BEEN MADE AS REQUIRED TO ACCOMMODATE THE PROJECT REQUIREMENTS.

GENERAL INSTRUMENT OR FUNCTION SYMBOLS

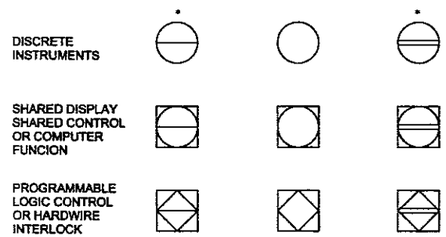

* NORMALLY INACCESSIBLE OR BEHIND-THE-PANEL DEVICES OR FUNCTIONS MAY BE DEPICTED BY USING THE SAME SYMBOL BUT WITH DASHED HORIZONTAL BARS, i.e.:

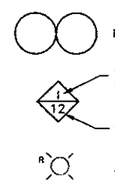

ISA INSTRUMENTATION NOMENCLATURE

	FIST LETTER		SUCCEDING LETTERS		
	MEASURED OR INITIATING VARIABLE	MODIFIER	READOUT OR PASSIVE FUNCTION	OUTPUT FUNCTION	MODIFIER
A	ANALYSIS		ALARM		
B	BURNER, COMBUSTION		USER'S CHOICE	USER'S CHOICE	USER'S CHOICE
C	CONDUCTIVITY				
D	DENSITY (MASS) OR SPECIFIC GRAVITY	DIFFERENTIAL			
E	VOLTAGE (EMF)		PRIMARY ELEMENT		
F	FLOW RATE	RATIO (FRACTION)			
G	GAUGING (DIMENSIONAL)		GLASS VIEW DEVICE		
H	HAND (MANUALLY INITIATED)				HIGH
I	CURRENT (ELECTRICAL)		INDICATE		
J	POWER	SCAN			
K	TIME OR TIME SCHEDULE	TIME RATE OF CHARGE		CONTROL STATION	
L	LEVEL		LIGHT (PILOT)		LOW
M	MOISTURE OR HUMIDITY	MOMENTARY			MIDDLE OR INTERMEDIATE
N	USER'S CHOICE		USER'S CHOICE	USER'S CHOICE	USER'S CHOICE
O	USER'S CHOICE		ORIFICE (RESTRICTION)		
P	PRESSURE OR VACUUM		POINT (TEST CONNECTION)		
Q	QUANTITY	INTEGRATE OR TOTALIZE			
R	RADIOACTIVITY		RECORD OR PRINT		
S	SPEED OR FREQUENCY	SAFETY		SWITCH	
T	TEMPERATURE			TRANSMIT	
U	MULTIVARIABLE		MULTIFUNCTION	MULTIFUNCTION	MULTIFUNCTION
V	VIBRATION			VALVE, DAMPER OR LOUVER	
W	WEIGHT OR FORCE		WELL		
X	FAILURE				
Y	EVENT, STATE OR PRESENCE			RELAY, COMPUTE, CONVERT	
Z	POSITION, DIMENSION			DRIVE, ACTUATE OR UNCLASSIFIED CONTROL ELEMENT	

PIPING/INSTRUMENT SYMBOLS

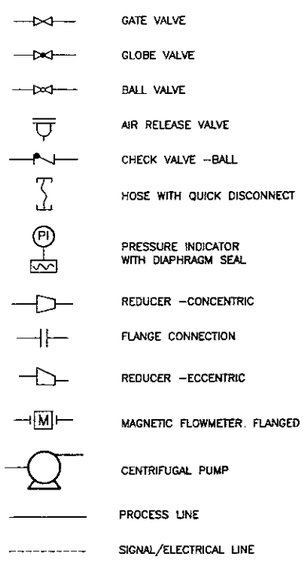

FUNCTION SYMBOLS AND ABBREVIATIONS

Σ SUMMING

Σ/n AVERAGING

√ EXTRACT SQUARE ROOT

÷ DIVIDE

X MULTIPLY

HAND SWITCH ABBREVIATIONS

- H - HAND
- O - OFF OR OPEN
- C - COMPUTER OR CLOSE
- A - AUTOMATIC
- L - LOCAL
- R - REMOTE
- S - START OR STOP
- M - MODULATE

AI	ANALOG INPUT
AO	ANALOG OUTPUT
DI	DIGITAL OR DISCRETE INPUT
DO	DIGITAL OUTPUT
ES	ELECTRIC SUPPLY
FC	FAIL CLOSED
FLP	FAIL LAST POSITION
LO	LOCKED OPEN
FO	FAIL OPEN
MC	MOTOR CONTROLLER
MCP	MAIN CONTROL PANEL
NC	NORMALLY CLOSED
NO	NORMALLY OPEN
PLC	PROGRAMMABLE LOGIC CONTROLLER
RTU	REMOTE TERMINAL UNIT
VSD	VARIABLE SPEED DRIVE

PIPE DESIGNATIONS

LINE SIZE
TYPE OF FLOW
MATERIAL OF CONSTRUCTION

2-GW-PE3408DR11

GW	GROUNDWATER
UW	UTILITY WATER
PE3408DR11	HPDE CLASSIFICATION 3408 STANDARD DIMENSION RATIO 11
PVC(S) SCH 80	POLYVINYL CHLORIDE, SOCKET, SCHEDULE 80
PVC(T) SCH 80	POLYVINYL CHLORIDE THREADED, SCHEDULE 80

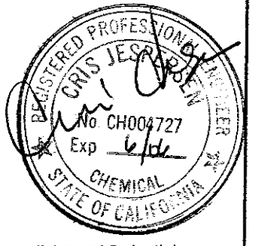

Underground Service Alert
Call:TOLL FREE
1-800
422-4133
TWO WORKING DAYS BEFORE YOU DIG

NO.	DATE	APPR.	REVISION	NO.	DATE	APPR.	REVISION
A	1/04		90% DESIGN SUBMITTAL				
B	10/04		100% DESIGN				
C	2/05		FINAL 100% DESIGN/ISSUED FOR CONSTRUCTION				

DEPARTMENT OF THE NAVY
SOUTHWEST DIVISION
San Diego California

WESTON SOLUTIONS
Walnut Creek California

CHECKED	DATE	CLIENT APPROVALS	DATE
DES. ENG.			
PROJ. ENG.			
PROJ. MGR.			
APPROVED			
APPROVED		ISSUED FOR	DATE

PROCESS AND INSTRUMENTATION LEGEND

REMEDIAL DESIGN SHALLOW GROUNDWATER UNIT REMEDY

DRAWN D.C.H.	DATE JANUARY 2004	DWG. NO. P-1	REV. NO. C
SCALE NONE	W.O. NO. 12954002004001020	SHT. - OF -	

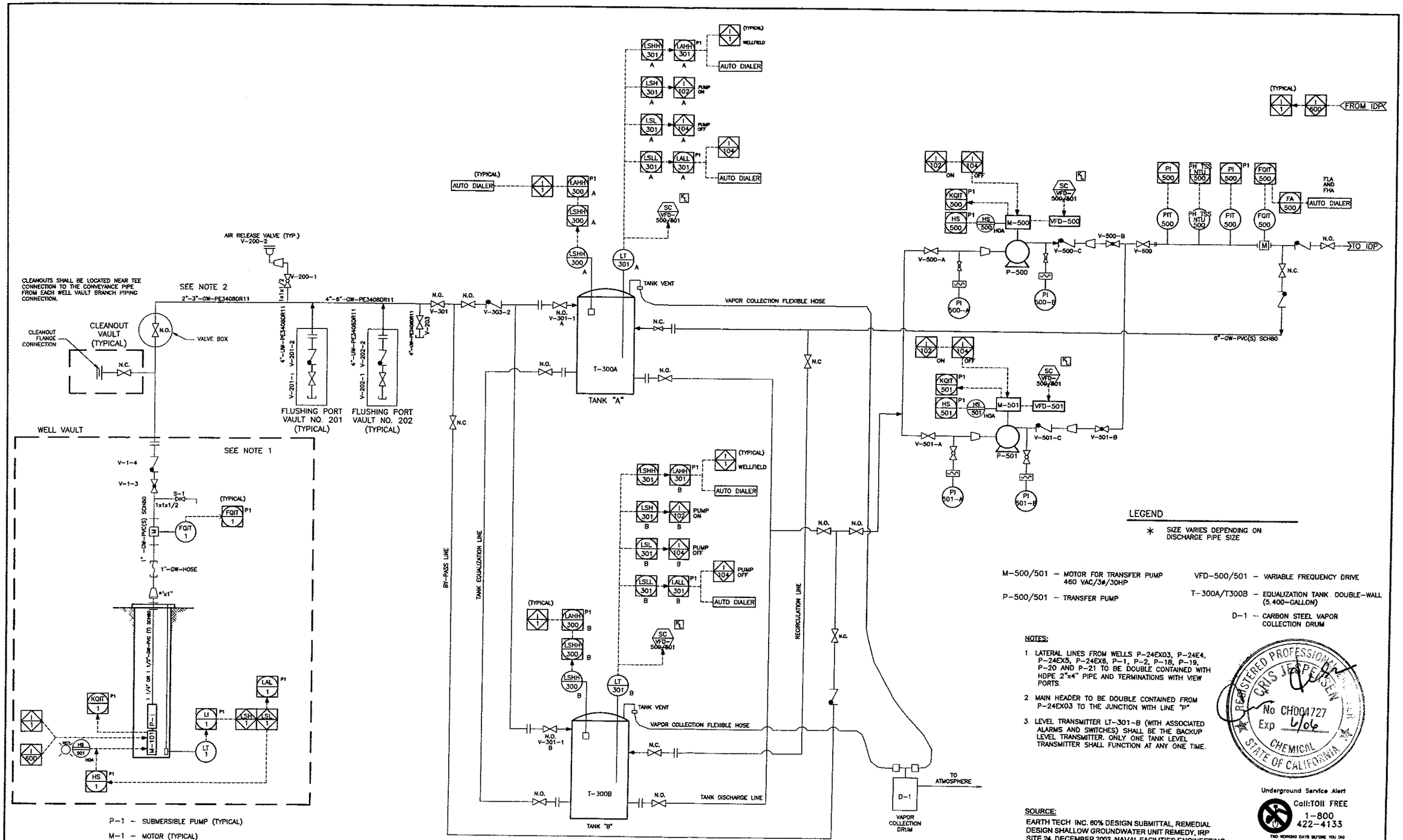

NO.	DATE	APPR.	REVISION
A	1/04		90% DESIGN SUBMITTAL
B	10/04		100% DESIGN
C	2/05		FINAL 100% DESIGN/ISSUED FOR CONSTRUCTION

DEPARTMENT OF THE NAVY
SOUTHWEST DIVISION
San Diego California

WESTON SOLUTIONS
Walnut Creek California

CHECKED	DATE	CLIENT APPROVALS	DATE
DES. ENG.			
PROJ. ENG.			
PROJ. MGR.			
APPROVED			
APPROVED		ISSUED FOR	DATE

PROCESS AND INSTRUMENTATION DIAGRAM

REMEDIAL DESIGN SHALLOW GROUNDWATER UNIT REMEDY

DRAWN	DATE	DWG. NO.	REV. NO.
D.C.H.	JANUARY 2004	P-2	C
SCALE	W.O. NO.	SHT.	OF
NONE	12954002004001020	-	-

Panel Layout Key

Item	Item Description	Manufacturer	Part #
1	ENCLOSURE	STAHLIN	RJ2016HW
2	MOTOR CONTROLLER	CUTLER HAMMER	AE317TNS3A
3	PLC I/O RACK	ALLEN BRADLEY	1734 - ACNR
4	PLC A/I CARD	ALLEN BRADLEY	1734 - EI2C
5	PLC D/I CARD	ALLEN BRADLEY	1734 - IB4
6	PLC D/O CARD	ALLEN BRADLEY	1734 – OW2
7	PLC REPEATER	ALLEN BRADLEY	1786 - RPCD
8	PLC REPEATER INTERFACE	ALLEN BRADLEY	1786 - RPA
9	PLC COAX TAP MODULE	ALLEN BRADLEY	1786 - TPYR
10	TERMINALS	ALLEN BRADLEY	1492-W3
11	WIRING DUCT	PANDUIT	G1X1.5DG6
12	24VDC POWER SUPPLY	WIEDMULLER	8708660000
13	CONTROL XFMR	HAMMOND	PTD50-MQMJ

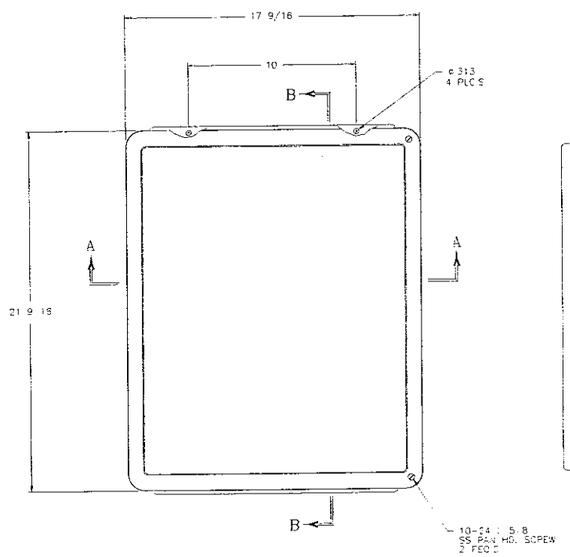

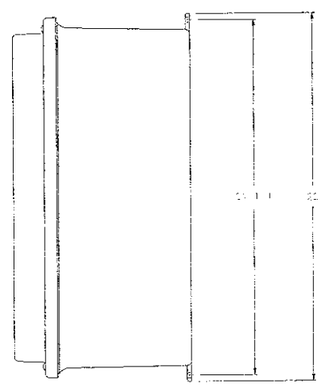

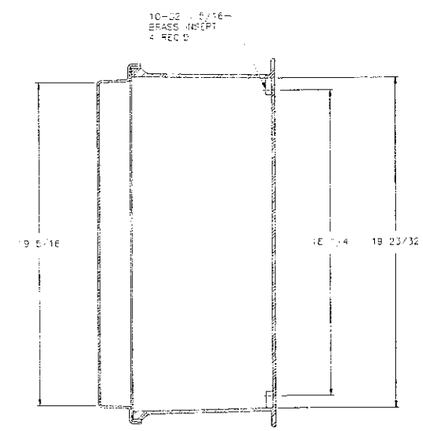

SECTION B–B

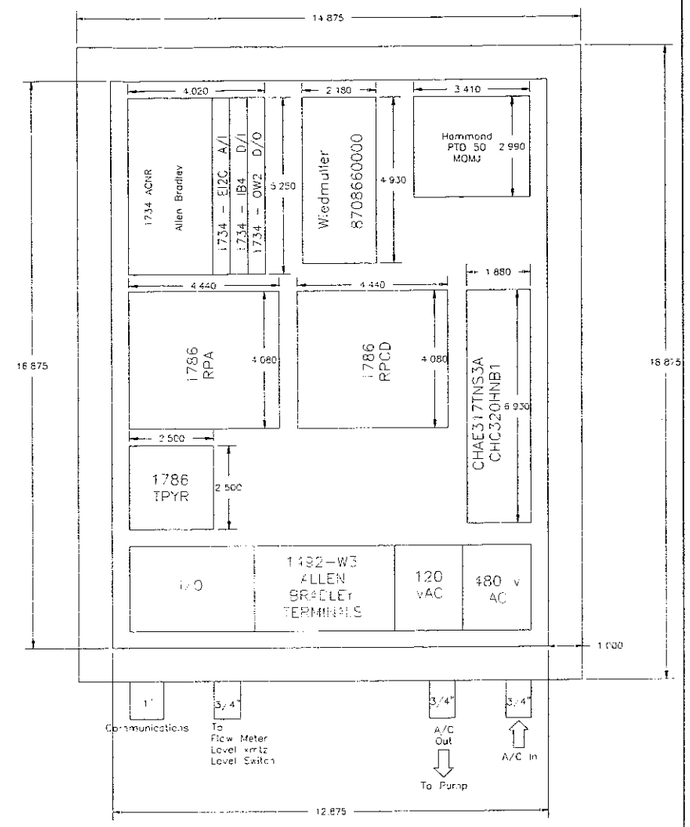

PANEL LAYOUT

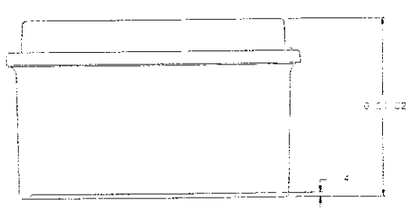

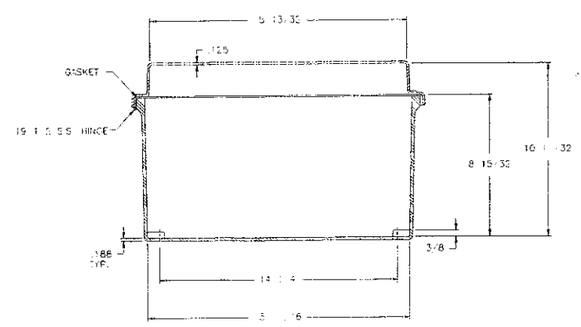

SECTION A–A

REGISTERED PROFESSIONAL ENGINEER
CRIS JESNEGEN
No. CH004727
Exp. 6/06
CHEMICAL
STATE OF CALIFORNIA

Underground Service Alert
Call:TOll FREE
1-800
422-4133
TWO WORKING DAYS BEFORE YOU DIG

NO.	DATE	APP.	REVISION
A	1/04		90% DESIGN SUBMITTAL
B	10/04		100% DESIGN
C	2/05		FINAL 100% DESIGN ISSUED FOR CONSTRUCTION

NO.	DATE	APP.	REVISION

DEPARTMENT OF THE NAVY
SOUTHWEST DIVISION
San Diego California

WESTON SOLUTIONS

CHECKED	DATE	CLIENT APPROVALS	DATE
DES. ENG			
PROJ. ENG			
PROJ. MGR			
APPROVED			
APPROVED		ISSUED FOR	DATE

ENCLOSURE PANEL AND LAYOUT
FOR WELL VAULTS
REMEDIAL DESIGN SHALLOW GROUNDWATER UNIT REMEDY

DRAWN D.C.H.	DATE JANUARY 2004	DWG. NO P-3	REV. NO C
SCALE NONE	W.O. NO 12954002004001020	SHT. – OF –	

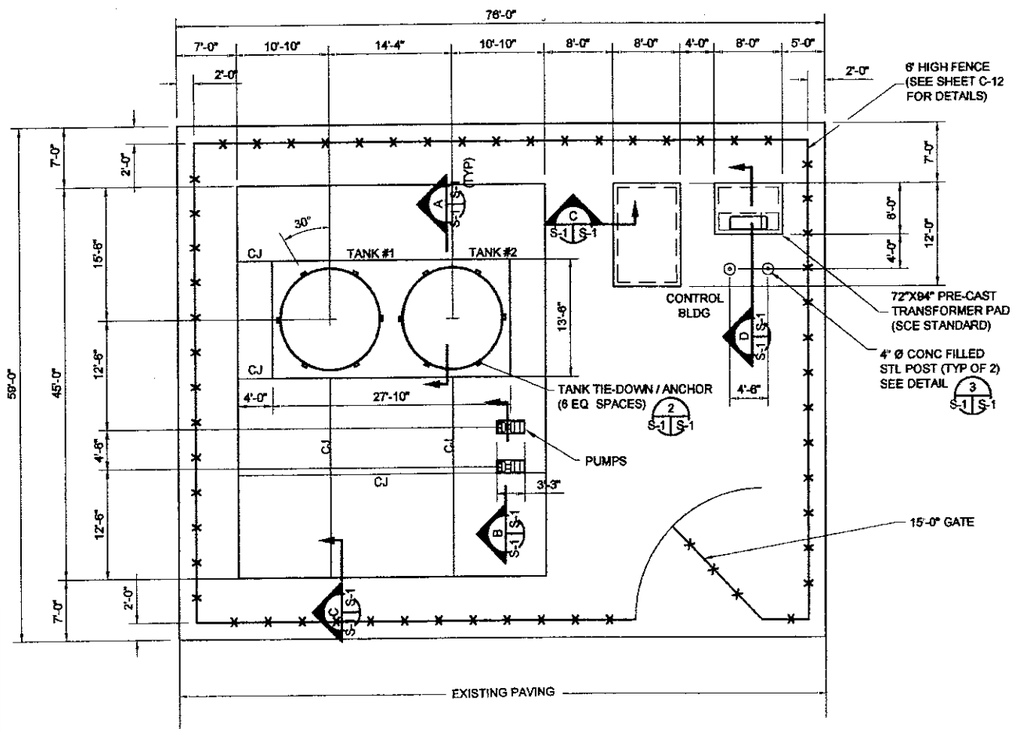

1 FOUNDATION PLAN
S-1 | S-1 SCALE: 1/8" = 1'-0"

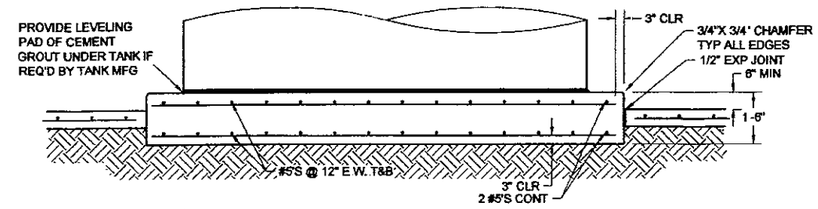

A SECTION AT TANK PADS
S-1 | S-1 SCALE: 1/4"=1'

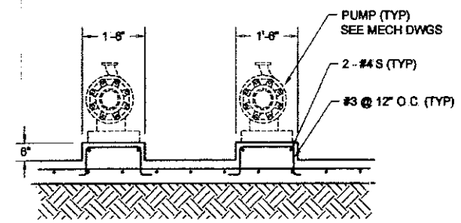

B SECTION AT PUMP PAD
S-1 | S-1 SCALE: 1/4"=1'

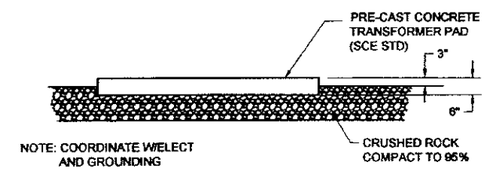

D SECTION AT TRANSFORMER PAD
S-1 | S-1 SCALE: 1/4"=1'

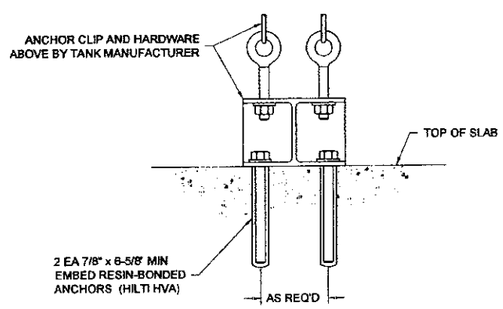

2 TANK ANCHOR DETAIL
S-1 | S-1 NOT TO SCALE

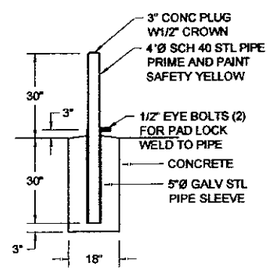

3 BARRIER POST DETAIL
S-1 | S-1 NOT TO SCALE

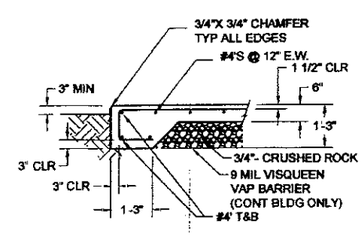

C SECTION AT CONC SLAB
S-1 | S-1 SCALE: 1/4"=1'

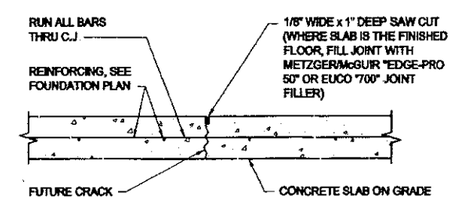

NOTE:
SAW CUTS MUST BE MADE AS SOON AS THE SLAB WILL SUPPORT THE WEIGHT OF THE SAW AND THE OPERATOR (NORMALLY WITHIN 2 HOURS AFTER FINISHING) USE A SAW WHICH IS SPECIALLY DESIGNED FOR CUTTING FRESH CONCRETE, SUCH AS "SOFF-CUT" OR EQUAL.

E TYP CONTROL JOINT (CJ)
S-1 | S-1 SCALE: N.T.S.

STRUCTURAL NOTES

Design Criteria:
1. U.B.C 1997 (CBC 2001)
2. 70 mph wind, exposure 'd'
3. Seismic zone 4, soil profile S_d . N_a=1 1 N_v=1.8
4. Occupancy category hazardous

Foundations:
1. Overexcavate a minimum of 3' of existing subgrade in areas beneath proposed slabs and foundations followed by backfill with engineered fill and compaction to 95% maximum dry density per ASTM/D 1557
2. Maximum soil pressure 2,000 pounds per square foot.
3. All excavations shall be inspected and approved prior to forming and placing reinforcing steel.
4. See project soils report dated July 2004 for additional requirements.

Concrete:
1 The 28-day compressive strength shall be 4,000 PSI
2 Aggregates: natural sand and rock; ASTM C-33
3 Cement: Portland cement Type II low alkali: ASTM C-150
4 Pipe and ducts shall be placed as shown on the site plan.
5 All foundation dimensions are approximate and shall be verified in the field subject to the final selection and location of mechanical equipment.
6 Concrete work: Slab surface to receive two coats of cementitious coating, Sikatop 144, provide anchor bolts for equipment as shown.
7 Work is subject to special inspection as specified in section 1701 of the 1997 U.B.C.
8 Locate reinforcement before drilling for anchor bolts. Do not drill through reinforcement.
9 Concrete slab to be a monolithic pour

Reinforcing for Concrete:
1 A.S.T.M. A-615 Deformed Bars Grade 60
2 Minimum lap splice 25" for #4 bars 31" for #5 bars
3 Splices for all horizontal reinforcing shall be staggered.
4 Minimum concrete coverage:
The following minimum cover shall be maintained unless noted otherwise:
Cast against & exposed to earth: 3"
All other locations: 1 ½"
5 Welding not permitted.

Anchor Bolts:
1 Anchor bolts shall be stainless steel type, HILTI HSE2421 or HVA resin-bonded anchors in the size and number indicated on the anchorage details.
2 Use larger anchor size and install additional anchors if indicated on equipment manufacturer's shop drawings.
3. Locate per equipment template
4. Use drill size recommended by bolt manufacturer Do not drill beyond length required for installation.
5 Provide sufficient bolt length to allow for maximum grout thickness and full engagement of nuts
6. Set equipment skids in place, shim to level and set but do not torque bolts until completion of grouting and at least 7 days curing of grout.

Special Inspection:
Special Inspection is required for the following items:
1. Foundation preparation
2 Reinforcement
3. Placing and curing of concrete
4. Grouting of equipment skids and base plates
5. Anchor bolts

SOURCE:
EARTH TECH, INC. 60% DESIGN SUBMITTAL, REMEDIAL DESIGN SHALLOW GROUNDWATER UNIT REMEDY IRP SITE 24, DECEMBER 2003, NAVAL FACILITIES ENGINEERING COMMAND CONTRACT N6272-94-D-0048.

Underground Service Alert
Call:TOll FREE
1-800
227-2600
TWO WORKING DAYS BEFORE YOU DIG

NO.	DATE	APPR.	REVISION
A	1/04		90% DESIGN SUBMITTAL
B	8/04		MODIFIED SGU LAYOUT
C	1/04		100% DRAFT DESIGN SUBMITTAL
D	2/05		FINAL 100% DESIGN / ISSUED FOR CONSTRUCTION

NO.	DATE	APPR.	REVISION

DEPARTMENT OF THE NAVY
SOUTHWEST DIVISION
San Diego California

WESTON SOLUTIONS
Walnut Creek California

CHECKED	DATE	CLIENT APPROVALS	DATE
DES. ENG.			
PROJ. ENG.			
PROJ. MGR.			
APPROVED			
APPROVED		ISSUED FOR	DATE

REGISTERED PROFESSIONAL ENGINEER DOUGLAS D. MUNSON No. C 52599 Exp. 12/31/04 CIVIL STATE OF CALIFORNIA

STRUCTURAL DETAILS

REMEDIAL DESIGN SHALLOW GROUNDWATER UNIT REMEDY

DRAWN	DATE	DWG. NO.	REV. NO.
D.C.H.	JANUARY 2004	S-1	C
SCALE	W.O. NO.	SHT.	OF
AS NOTED	12954002004001020	-	-

APPENDIX D

Material Selection Report for Conveyance Piping

Appendix D
Material Selection Report for Conveyance Piping

EXECUTIVE SUMMARY

A study was undertaken to select the most appropriate material to use for the conveyance piping for the shallow groundwater unit remedy at Installation Restoration Program (IRP) Site 24, volatile organic compound source area, at the former Marine Corps Air Station (MCAS) El Toro, California.

Piping material selection was based on two sets of criteria as follows:

Essential Criteria

- Chemically resistant to contaminated groundwater
- Underground pipe connections must be non-mechanical
- Piping must rated to withstand pressures up to 150 pound per square inch – gas (psig) at a temperature of 73°F

Desirable Criteria

- Life expectancy (50 year life)
- Minimal effects due to exposure to temperature variations and sunlight for aboveground portion of conveyance system
- Optimal material and installation costs
- Ease of installation
- Positive previous experience in similar applications

Although the groundwater to be conveyed contains trace amounts of strong organic solvents (trichloroethene, tetrachloroethene, and chloroform) and a powerful oxidizer (perchlorate), their concentrations are not high enough to affect the integrity of piping made from conventional materials. In addition, previous experience has demonstrated successful use of conventional pipe materials such as high-density polyethylene (HDPE) and polyvinyl chloride (PVC) for extraction and conveyance of groundwater contaminated with the same compounds. Operating conditions such as temperature and pressure are also moderate and will not preclude the use of conventional materials. Based on these assessments, a comparison of piping materials was limited to steel, HDPE, polypropylene, PVC, and acrylonitrile-butadiene styrene.

HDPE was selected for the portion of conveyance piping to be placed below ground due to its light weight, ease of handling and installation (joining), low cost, and previous successful use in similar applications. It was not selected for aboveground application because it has a relatively high thermal expansion coefficient and will warp and potentially weaken if exposed to sunlight and large temperature variations.

For the exterior application at the pump station, PVC was selected due to its rigidity and associated lower thermal expansion coefficient, making it less susceptible to bending and expansion under hot climates. PVC has also been used successfully for almost ten years in a similar application. PVC is susceptible to ultraviolet (UV) radiation and must be protected by covering it with paint.

CONTENTS

EXECUTIVE SUMMARY D-iii

ACRONYMS AND ABBREVIATIONS D-vii

D1. INTRODUCTION D-1

D2. BACKGROUND D-1

D2.1 Project Description D-2

D3. DECISION CRITERIA D-2

D3.1 Chemical Resistance D-2
D3.2 Non-Mechanical Joints D-4
D3.3 Pressure Requirements D-4
D3.4 Duration of Remedial Action D-4
D3.5 Exposure to Elements D-4
D3.6 Material and Installation Costs D-4
D3.7 Ease of Installation D-5
D3.8 Previous Experience with Material D-5

D4. ALTERNATIVES D-5

D4.1 Preliminary Screening D-5
D4.2 Steel Pipe D-5
D4.2.1 General Characteristics D-5
D4.3 Thermoplastic Pipe D-6
D4.3.1 General Characteristics D-6
D4.3.2 High-Density Polyethylene D-6
D4.3.3 Polyvinyl Chloride D-7
D4.3.4 Polypropylene D-8
D4.3.5 ABS D-8

D5 ANALYSIS OF ALTERNATIVES D-10

D6. CONCLUSIONS AND RECOMMENDATIONS D-11

D7. REFERENCES D-12

ATTACHMENTS

1 Physical and Chemical Properties of Contaminants of Concern

CONTENTS

TABLES

D-1	Cost Information for Steel Pipe	D-6
D-2	Installed Cost Information for Polyethylene Pipe	D-7
D-3	Installed Cost Information for PVC Pipe	D-8
D-4	Installed Cost Information for Polypropylene Pipe	D-8
D-5	Installed Cost Information for ABS Pipe	D-9
D-6	Summary of Material Characteristics	D-10

ACRONYMS AND ABBREVIATIONS

µg/L	microgram per liter
ABS	acrylonitrile-butadiene styrene
BRAC	Base Realignment and Closure
FRP	fiber-reinforced plastic
HDPE	high-density polyethylene
IDP	Irvine Desalter Project
IRP	Installation Restoration Program
IRWD	Irvine Ranch Water District
MCAS	Marine Corps Air Station
OCWD	Orange County Water District
OSHA	Occupational Safety and Health Administration
PCE	tetrachloroethene
PP	polypropylene
ppm	parts per million
PVC	polyvinyl chloride
RAO	remedial action objective
TCE	trichloroethene
TLV	threshold limit value
UV	ultraviolet
VOC	volatile organic compound

D1. INTRODUCTION

This report addresses the selection of conveyance pipe material for the shallow groundwater unit remedy at Installation Restoration Program (IRP) Site 24, former Marine Corps Air Station (MCAS) El Toro, and is in support of the 60 percent design submittal. The objective of this report is to select appropriate piping material that will meet the technical requirements of the remedy.

D2. BACKGROUND

Former MCAS El Toro is located in a semi-urban, agricultural area of southern California, approximately 8 miles south of Santa Ana and 12 miles northeast of Laguna Beach, and covers approximately 4,740 acres. Land use around the former station includes commercial, light industrial, and residential. MCAS El Toro closed on July 2, 1999 as part of Base Realignment and Closure (BRAC).

IRP Site 24 is located in the southwest quadrant of Former MCAS El Toro and encompasses approximately 200 acres. The site is highly industrialized, housing two large former aircraft hangars (Buildings 296 and 297) and several smaller buildings that were used for aircraft and vehicle maintenance and repair. These activities generated waste solvents that are believed to be the source of volatile organic compound (VOC) contamination at the site.

IRP Site 24 comprises two media: soil and groundwater. In the past, VOC contamination migrated from the soil at IRP Site 24 to the SGU and subsequently to the principal aquifer, which resides mainly outside the station boundary and is referred to as Operable Unit 1 – Site 18, Regional VOC Groundwater Plume. Contaminated soil at IRP Site 24 was addressed previously using soil vapor extraction to remove VOC contamination, and a closure report has been submitted to the BRAC Cleanup Team. The remedial action for the groundwater at IRP Sites 18 and 24 consists of extraction and treatment, and institutional controls (DON 2002). The following remedial action objectives (RAO) were established for groundwater at IRP Sites 18 and 24:

IRP Site 18

- Reduce concentrations of VOCs in the area of concern in the shallow groundwater unit and in the principal aquifer down gradient of the source areas to federal or state cleanup levels.
- Contain migration of VOCs above cleanup levels in the principal aquifer.
- Prevent domestic use of groundwater containing VOCs at concentrations above cleanup levels.

IRP Site 24

- Reduce concentrations of VOCs in the Site 24 shallow groundwater unit to federal or state cleanup levels.
- Prevent use of groundwater containing VOCs at concentrations above cleanup levels.
- Prevent VOCs at concentrations above cleanup levels from migrating beyond the shallow groundwater unit.

The VOC plume will be removed using groundwater extraction wells. The extraction well flow rates and locations are based on groundwater flow and contamination plume modeling (Earth Tech 2003). In addition, the Orange County Water District and Irvine Ranch Water District (OCWD/IRWD) are conducting a parallel remedial design to address IRP Site 18 issues per the ROD and settlement

agreement. Extracted groundwater will be treated at the modified Irvine Desalter Project (modified IDP) facility to remove VOCs using air stripping and activated carbon adsorption (DON 2002). The modified IDP is a proposed water supply development project initiated by OCWD/IRWD.

D2.1 Project Description

Contaminated groundwater extracted from the SGU at IRP Site 24 is to be conveyed through underground piping to the transfer compound located near the west corner of the former station boundary. The conveyance piping will surface at the transfer compound where booster pumps will be used to transfer the groundwater to the modified IDP at the required flow rate and pressure.

The primary contaminant of concern in the groundwater is trichloroethene (TCE) at a maximum concentration of about 1,000 micrograms per liter (µg/L). Tetrachloroethene (PCE) was also found at a maximum concentration of 200 µg/L. Recent analyses of extracted groundwater from IRP Site 24 have detected chloroform, perchlorate, benzene, toluene, ethylbezene and TCE at concentrations of 1.89, 4.7, 2.2, 12, 2, and 51 µg/L, respectively (Earth Tech 2003). Physical, chemical, and human health properties of TCE, PCE, and perchlorate are provided in Attachment 1.

The groundwater remedy is expected to span a period of at least 50 years based on hydrogeologic modeling data. The conveyance piping for the remedy is to be placed underground to allow development of the area. Gravity flow of the extracted groundwater is not possible due to existing underground utilities that cannot be disturbed. Conveyance of the groundwater will be done under pressure to accommodate elevation changes and final discharge into an equalization tank.

D3. DECISION CRITERIA

Selection of the conveyance pipe material will be based on two sets of criteria: essential and desirable. Essential criteria are those that **must** be met in order for the alternative to be considered. Essential criteria take into account health and safety of the public, conservation of the environment, and technical feasibility. Desirable criteria are those that would not contribute to the protection of the public or the environment, but may make one alternative more preferable than another.

Essential Criteria:

- Chemically resistant to contaminated groundwater
- Underground pipe connections must be non-mechanical
- Piping must withstand pressures up to 150 pound per square inch – gas (psig) at a maximum temperature of 73°F

Desirable Criteria

- Life expectancy (50 year life)
- Minimal effects due to exposure to temperature variations and sunlight for aboveground portion of conveyance system
- Optimal material and installation costs
- Ease of installation
- Positive previous experience in similar applications

D3.1 Chemical Resistance

The material selected must not deteriorate to the point of failure due to exposure to TCE, PCE, or

perchlorate present in the groundwater at the maximum expected concentrations for the duration of the remedial action. This criterion is of the highest concern due to the prospect of releasing contaminated water near the surface and contaminating previously unaffected ground and/or potentially exposing the public to the contaminated water. Another consequence is having to replace an extensive piping network prematurely.

Not all pipe materials are compatible with TCE, especially those with a petroleum base. Several common pipe materials are incompatible with TCE in its pure form or in concentrated solutions. Polyvinyl chloride (PVC), acrylonitrile butadiene styrene (ABS), and high-density polyethylene (HDPE) are reported as not suitable for transporting pure TCE, while polypropylene (PP) and polyvinylidiene fluoride are suitable to maximum temperatures of 68°F and 170°F, respectively (Harrington 2003). Polytetrafluoroethylene/Teflon® has been rated as having excellent resistance to TCE, as has fiber-reinforced plastic (FRP).

Metal pipes are also susceptible to transport of TCE due to the corrosive decomposition products generated (hydrochloric acid and chlorine). All major metal pipe materials have been rated as having either good or excellent resistance to TCE. Both 304 and 316 stainless steel, carbon steel, brass, and copper were rated as having good resistance corresponding to a corrosion rate of less than 50 thousandth of an inch (mils) per year. Hastelloy-C and aluminium were rated as having excellent resistance, with corrosion rates of less than 2 mils per year.

Selecting a material based on the pure substance, however, is not recommended chiefly because this could lead to unnecessary expenses. As stated previously, the maximum detected concentration of TCE is in the range of 1,000 μg/L, or approximately 1 part per million (ppm). Very little information is available that deals with the compatibility of materials with varying solutions of TCE in water. Most of the compatibility information is generated from piping manufacturers for specific case studies, which tend to deal exclusively with pure substances.

However, one article published by the EPA examined concentration-related effects of nonaqueous phase liquids on materials used in well construction (McCaulou et al. 1995). The article cites one study that found softening of PVC did not occur at activities below 0.6. The activity of a compound was estimated by dividing the aqueous concentration of the compound by its solubility. The solubility of TCE in water is 0.1 g/100 mL at 20°C. An activity of 0.6 corresponds to a concentration of 6×10^5 μg/L (600 ppm), over two orders of magnitude greater than the concentrations encountered in the groundwater at IRP Site 24. Although the authors note that there is lack of agreement on the structural degradation effects, they note that high concentrations are required for degradation to occur(i.e. concentrations corresponding to activities greater than 0.6).

In addition to the literature review, several remediation professionals within Earth Tech with extensive experience with pump and treat systems involving TCE-contaminated groundwater were interviewed. Dr. Hsien Chen cited a pump and treat system where concentrations of TCE varied between 2,000 and 10,000 μg/L. The piping used is made of PVC and he stated, "The system has been running since 1994 ...with no observed signs of deterioration." At another pump and treat site, HDPE piping is being used to convey groundwater with TCE concentrations that were as high as 40,000 μg/L at start-up in 1995 and have since reduced to about 3,000 μg/L. Here again, there have been no evident problems or pipe failures due to exposure to TCE.

PCE is also a strong organic solvent with very similar physical and chemical properties to TCE. However, it too is present in the groundwater at concentrations such that PCE or its degradation byproducts will not affect the structural integrity of the piping material used, either metal or plastic.

Perchlorates decompose or give off oxygen, often explosively, when heated. However, at concentrations of the order of 6 to 10 µg/L in groundwater, there is not enough of the compound or energy in the system to promote a reaction. Perchlorate forms salts with ions such as sodium, potassium, and ammonium that are soluble in water. Perchlorate does not react directly with metals or plastics that make up common pipe material.

D3.2 Non-Mechanical Joints

For the portion of piping that will be laid underground, connections must be non-mechanical. Mechanical joints are prone to failure and/or leakage due to expansion and loosening of the joints, thereby necessitating regular inspection. With the majority of piping being underground, regular inspection and maintenance will not be possible. Therefore, only piping made from a material that can be either welded, butt-welded, or solvent cemented (glued) is permitted for this application.

D3.3 Pressure Requirements

Groundwater extracted from the SGU is to be conveyed to the station boundary in the northwest corner of the former station to a holding tank. Due to expected friction and head losses along the pipe route and for discharging into the holding tank, the groundwater will be conveyed under pressure. A hydraulic analysis of the conveyance system (see Appendix E) determined that the maximum pressure for the piping is at the top of the extraction well at about 50 psig and at the discharge of the transfer pumps at a maximum of 55 psig. However, pressure ratings for many pipe materials, such as thermoplastics, vary with temperature. Temperatures at the site vary between 50°F and 100°F, with peaks reaching 120°F. Although underground piping will be protected from extreme temperatures by the soil cover, piping exposed to atmospheric conditions must have a pressure rating taking into account ambient temperatures. In order to allow for temperature effects, the minimum pressure rating of the piping system must be 150 psig at 73°F.

D3.4 Duration of Remedial Action

The design of the SGU remedial action is based on results of groundwater modeling (Earth Tech 2003). The model examined several scenarios over a 40-year period. Based on the model results, extraction of groundwater from the SGU is anticipated to take place over a period of at least 30 to 40 years. The selected conveyance piping must have a life expectancy of at least 50 years with minimal maintenance requirements.

D3.5 Exposure to Elements

The aboveground portion of the conveyance system, at the transfer compound, will be exposed to ultraviolet (UV) radiation from the sun and significant temperature fluctuations, which can affect the life of the material. The high energy, UV radiation from the sun is known to affect certain materials, including some thermoplastics used to make pipes. Temperature fluctuations can also induce heat stresses in pipes that have high thermal expansion coefficients, which can shorten their useful life. In addition, these materials have special installation requirements such as expansion joints to accommodate the expansion and contraction cycles, thereby adding to the cost.

D3.6 Material and Installation Costs

Although not an essential criterion, material and installation costs are a major factor in selecting pipe material and will be used to select between comparable options. For example, although some of the more exotic materials have good resistance to TCE in its pure form, the cost of such materials is

higher than standard materials and the need for such materials may not be warranted given the low concentrations of TCE in the groundwater.

D3.7 Ease of Installation

The conveyance pipe route will traverse an area congested with other underground utilities. In addition, numerous bends and connections will be necessary to connect to each of the extraction wells. This implies that piping will be laid in awkward situations—for example, sometimes going beneath utilities, other times over utilities, and likely using non-standard angles for bends. Pipe material that uses welded or solvent-cemented joints or customizable bends and connections are considered preferable.

D3.8 Previous Experience with Material

Previous experience with certain materials on other projects is also an important factor in material selection. Where experience in similar projects with the material is positive, its use will be preferred.

D4. ALTERNATIVES

D4.1 Preliminary Screening

This project does consist of two different applications, one underground and the other aboveground. Underground piping is not exposed to UV light and large temperature fluctuations but must be installed without the use of mechanical joints. Most materials, by using welded joints, solvent cementing, or gluing, can also meet this requirement. Special attention to UV resistance and thermal expansion is necessary for selection of aboveground piping.

The range of process operating pressures and temperatures are moderate and would not preclude using most types of pipe material. With respect to chemical compatibility, the literature review and empirical evidence show that it is not necessary to use specialized materials to accommodate the a concentration of TCE found in the groundwater. As such, pipe materials such as FRP, polytetrafluoroethylene, and Teflon, which have good resistance to organic solvents but tend to be more expensive than the more common pipe materials, are not considered.

The common types of pipe materials to convey groundwater are iron or steel, HDPE, PVC, PP, and ABS. Properties of each are provided in the following sections, along with a discussion of the advantages and disadvantages with respect to this application.

D4.2 Steel Pipe

D4.2.1 General Characteristics

In general, steel pipes are strong, malleable, can withstand high temperatures and pressures, and do not react with most organic compounds, including TCE. Steel pipes are available in a wide range of sizes and wall thickness, with ends prepared for butt-welding. Butt-welding is the most widely used joint in steel piping systems, providing joint strength that is equal to the original. Steel is a hard material able to withstand abrasion from solids.

Steel pipe is widely used in low-pressure, underground water distribution services where internal and external corrosion may cause a considerable loss of metal. Steel pipe is susceptible to deterioration when exposed to hydrogen sulfide, a gas that is generated from microbial activity under anaerobic

conditions. Special consideration regarding internal and external corrosion must be taken with metal pipes. Galvanic corrosion may also play a role if piping is coupled to other metals.

Installation of steel pipe requires special consideration due to the heavy weight of the piping and tools needed for welding joints. Steel pipe requires more than one person to carry the pipe or use of a crane, and must be joined in-place (e.g., in the trench). Table D-1 presents cost information for steel pipe

Table D-1: Cost Information for Steel Pipe

Description	Cost	Unit Cost
Black Welded Steel Butt-Weld Pipe: 3" Pipe, 36 Length, Butt-Weld X Butt-Weld *	53 08	17.59/ft
Black Welded Steel Butt-Weld Pipe: 6" Pipe 36" Length Butt-Weld X Butt-Weld *	198 23	66.08/ft
Black Cast Iron Threaded Pipe Fitting: 125 psi 3 Pipe Size, 90 Deg Elbow	22 47	22 47

Notes
Information obtained from McMaster-Carr catalogue
* rated at 150 psig

D4.3 Thermoplastic Pipe

D4.3.1 General Characteristics

Plastic or thermoplastic pipe is free from internal and external corrosion, is easily cut and joined, and does not cause galvanic corrosion when coupled to other materials (Green 1984). The smooth interior walls of plastic fittings and pipe result in lower pressure loss and higher volume. Plastics are lightweight and are more easily handled than metal pipes, making pipes easier to install and thereby reducing labor costs. Plastic piping systems are less heat resistant and strength decreases at higher temperatures. Since piping expands at elevated temperatures, additional pipe supports are required. Methods of joining include threaded joints, solvent-welded joints, heat-fused joints, and insert fittings. Fluids for which a plastic is not suited penetrate and soften it rather than dissolve surface layers.

Use of plastic pipe has been very successful for underground applications. Special consideration must be given to the use of plastic pipe for outdoor, aboveground applications. Atmospheric temperature variations cause expansion and contraction of pipe, which may lead to material fatigue. Exposure to UV radiation deteriorates many pipe materials.

D4.3.2 High-Density Polyethylene

High-density polyethylene is a soft, flexible, and ductile material. It has excellent resistance at room temperature to chemical corrosion from salts, sodium and ammonium hydroxides, and nitric, hydrochloric, and sulphuric acids, the latter being a byproduct of anaerobic activity often occurring in pipes. HDPE pipe is also described as being excellent for abrasive slurries (Harrington) and for water drainage applications (McMaster-Carr). Although most manufacturers do not recommend HDPE for use with pure trichloroethylene, the Plastics Pipes Institute (2000) lists it as having limited resistance up to 120°F. HDPE pipe has been used for remediation of water contaminated with TCE without failure. HDPE pipe is currently being used for a remediation project for conveyance of TCE-contaminated water (Mora 2003). The piping system has been in operation since 1995 without failure. HDPE is made from a higher density resin that reduces splitting and pinholing in service, and increases the strength of the material and the maximum service temperature (Green 1984).

HDPE pipe and tubing is available in sizes from 1/8-inch up to 42 inches in diameter and dimension ratio thicknesses capable of withstanding high pressures. HDPE pipe connections are typically made with heat-fusion, socket-type, and butt-type fittings that are easily done in the field. HDPE pipe is flexible enough to be welded above ground and lowered into the trench afterwards.

Most HDPE pipe contains carbon black to prevent UV radiation from degrading it. Even pipe that will be installed underground can be expected to be stored outside, so in such applications HDPE pipe should always contain carbon black. Fischer (2002) lists underground potable water and waste water transport as recommended applications of HDPE pipe. Table D-2 presents installed cost information for polyethylene pipe and material costs for 6" HDPE pipe Polyethylene pipe is very similar to HDPE, and although the material costs vary slightly, labor and equipment costs should not change.

Table D-2: Installed Cost Information for Polyethylene Pipe

Description	Unit	Material	Labor	Equipment	Total
Polyethylene pipe, Standard dimension ratio 21 (SDR-21), using small tools					
3"	LF	1.05	4.28	05	5.38
6"	LF	3.28	4.71	05	8.04
6" HDPE SDR 11 *	LF	4.23			

Notes
Information obtained from National Construction Estimator. Page 553, 2003 California Heavy Construction Costs – Mechanical.
* Quote obtained from Santa Fe Winwater Company, May 6, 2003.

D4.3.3 Polyvinyl Chloride

PVC pipe has excellent resistance at room temperature to chemical corrosion from salts, ammonium hydroxide, and nitric, hydrochloric, acetic, and sulphuric acids, but may be damaged by some ketones, aromatics, and some chlorinated hydrocarbons (Green 1984).

PVC will not rust, scale, pit, or corrode, nor are they subject to electrolysis (Fischer 2002). Buried applications are not affected by soil conditions. While painting is not required on indoor systems, aboveground installations require two coats of white-colored water-base latex paint to provide protection from the effects of sunlight. PVC pipe is currently being used for a remediation project in Santa Barbara, California for conveyance of TCE-contaminated water (Chen 2003). The piping system has been in operation since 1994 without evidence of failure.

Installation costs for PVC are much lower than steel pipe. Lighter weight and use of solvent cemented connections speed and simplify handling and installation. Fischer (2002) lists aboveground and underground potable water transport as recommended applications of PVC. Table D-3 presents typical material, labor, and equipment costs for PVC pipe.

Table D-3: Installed Cost Information for PVC Pipe

Description	Unit	Material	Labor	Equipment	Total
PVC Schedule 40 pipe Glued joint, installed in an open trench; no excavation or backfill included, using small tools					
3" [a]	LF	1.21	1.39	0.03	2.63
6" [b]	LF	3.05	3.04	0.07	6.16

Notes
Information obtained from National Construction Estimator Page 224, 2003 California Heavy Construction Costs.
[a] Maximum working pressure of 260 psi at 73°F (BC Ministry of Agriculture 1977)
[b] Maximum working pressure of 175 psi at 73° F (BC Ministry of Agriculture 1977)

D4.3.4 Polypropylene

Polypropylene is similar to polyethylene, containing no chlorine or fluorine, but has slightly better resistance to solvents such as TCE (McMaster-Carr 2003). As with PVC and HDPE pipe, PP piping systems are available in Schedule 40, Schedule 80, and steel pipe dimension ratio (SDR) dimensions. Joining methods include butt or socket fusion or electrofusion. PP needs pigmentation to protect it from UV light in outdoor applications. Table D-4 presents typical material, labor, and equipment costs for PP pipe installation.

Table D-4: Installed Cost Information for Polypropylene Pipe

Description	Unit	Material	Labor	Equipment	Total
Polypropylene acid resistant drain, waste, and vent (DWV) pipe, Schedule 40 For fuseal fittings, solvent weld, using small tools					
3"	LF	5.67	2.57	0.03	8.27
6"	LF	14.50	4.71	0.05	19.26

Note
Information obtained from National Construction Estimator Page 551 2003 California Heavy Construction Costs.

D4.3.5 ABS

ABS is a thermoplastic material meeting various American Society for Testing and Materials (ASTM) Cell Classification requirements (USACE 2002). Although some ABS pipes are rated for pressure applications, it is mostly used for drain, waste and venting applications. ABS compounds have many different formulations that vary by manufacturer. ABS must be specified very carefully and thoroughly since an ABS compound may have acceptable results in one application, but not all compounds will be appropriate for similar applications. Pigments are added to ABS to make the pipe and fittings resistant to UV radiation degradation, but prolonged exposure to sunlight is not advised. ABS is also a combustible material and special consideration must be taken when it is installed in noncombustible buildings. ABS pipe can only effectively be joined by solvent welding.

The installation costs for ABS pipe are similar to those for HDPE and PVC. Table D-5 presents typical material, labor, and equipment costs for ABS pipe installation.

Table D-5: Installed Cost Information for ABS Pipe

Description	Unit	Material	Labor	Equipment	Total
ABS drain, waste, and vent pipe, pipe only Solvent weld. Not including fittings and hangars, using small tools					
3"	LF	2.20	1.45	0.01	3.66
6"	LF	6.65	2.89	0.03	9.57

Notes
Information obtained from National Construction Estimator, Page 542 2003 California Heavy Construction Costs

D5. ANALYSIS OF ALTERNATIVES

Table D-6 presents a summary of pipe material characteristics with respect to the selection criteria.

Table D-6: Summary of Material Characteristics

Material Options	Steel	HDPE	PVC	Polypropylene	ABS
Essential Criteria					
Chemical resistance to contaminants of concern	✓	✓	✓	✓	✓
Non-mechanical connections	✓	✓	✓	✓	✓
Minimum pressure rating of 150 psi at 73°F	✓	✓	✓	✓	✓
Desirable Criteria					
Life expectancy	May require thicker pipe to offset corrosion.	Useful life of pipe is greater than 50 years	Useful life of pipe is greater than 50 years.	Useful life of pipe is greater than 50 years.	Useful life of pipe is greater than 50 years.
Effect of exposure to sunlight	No effect	High thermal expansion coefficient. Susceptible to UV radiation.	Medium thermal expansion coefficient. Susceptible to UV radiation.	High thermal expansion coefficient. Susceptible to UV radiation.	High thermal expansion coefficient. Susceptible to UV radiation.
Installed Costs [a]					
3" pipe	17.59 [b]	2.63	5.38	8.27	3.66
6" pipe	66.08 [b]	6.16	8.04	19.26	9.57
Ease of installation	Difficult – requires heavy equipment and expert welding	Easy – Can be done with small tools. Must be welded.	Easy – Can be done with small tools. Can be glued or welded.	Easy – Can be done with small tools. Must be welded.	Easy – Can be done with small tools. Must be glued.
Previous Experience with Material for Similar Application	Steel has been used extensively for water and wastewater conveyance	Yes	Yes	No in-house experience, but expected to perform similarly to HDPE	No

Notes
[a] Includes material, labor, and equipment costs unless specified
[b] Includes material cost only.

The advantages of steel pipe are its strength, resistance to UV radiation, and low thermal expansion coefficients, making it suitable for outdoor application. The disadvantages are that this material is heavy, requiring large equipment to transport and place pipe, and it must be welded in place. For underground pipe, this would entail making the trench wider and working in a constrained space, both of which add to the cost of installation. The heavier material would also require stronger supports in aboveground installations compared with lighter materials. Steel pipe is also more expensive than the other materials being considered. Another disadvantage of steel pipe is its susceptibility to corrosion. In order to ensure the pipe would last for the entire remedial action, corrosion rates would have to be taken into account and, if necessary, larger pipe thickness used, which would add to the cost of the pipe.

In contrast to steel, HDPE is lightweight, flexible, and easily welded together. Because of its flexibility, HDPE pipe can be assembled and welded above ground and then lowered into the trench. It can also accommodate slight bends to avoid obstructions without having to use complicated joining methods. In addition, HDPE pipe is not affected by corrosion and scaling as is steel pipe. The disadvantages of HDPE pipe are its relatively high thermal expansion coefficient and susceptibility to UV radiation in exterior applications. Although the latter can be alleviated to some extent with the addition of carbon black to the plastic or by painting the pipe, the former property would pose additional challenges to the piping design.

PVC pipe has the many of the same advantages as HDPE with respect to corrosion resistance and light weight. However, PVC is more brittle and less flexible than HDPE. Unlike HDPE pipe, PVC must be joined in-place and cannot be bent around obstructions. In addition, greater care must be taken with PVC pipe when handling and storing it to avoid breakage. The advantage of PVC is that it has a lower thermal expansion coefficient than HDPE, making it more suitable for aboveground applications. PVC pipe must be painted to protect it from UV radiation.

PP has similar physical properties to HDPE pipe, but is slightly more resistant to bases, acids, and organic solvents. Since the concentration of TCE in the groundwater is less than 1 ppm, there is no advantage of using PP over HDPE given the additional cost of PP pipe. In several projects where TCE-contaminated groundwater was conveyed, none made use of polypropylene pipe.

ABS also has similar physical properties to HDPE pipe, but its application to pressure piping is not as extensive. As with PP, ABS piping has not been used on any projects that required conveyance of contaminated groundwater. This lack of a track record makes ABS a less favorable choice.

D6. CONCLUSIONS AND RECOMMENDATIONS

Pipe materials were assessed to determine which would be most suitable for the conveyance of contaminated groundwater at IRP Site 24, in which the primary contaminant is TCE. The concentration of TCE, a strong organic solvent, is on the order of 1 ppm and its activity is not high enough to pose structural damage to conventional thermoplastic pipes over the anticipated life of the remedial action. Therefore, it was not necessary to consider more exotic materials such as FRP pipe or Teflon. Conventional pipe materials evaluated for this application included iron or steel pipe, HDPE, PVC, PP, and ABS.

The selection process was based on essential and desirable criteria. All materials evaluated had to meet the essential criteria: chemical resistance to TCE at concentrations encountered in groundwater, use of non-mechanical joints for connections, and minimum pressure rating of 150 psi at 73°F. The most favorable material was selected based on the desirable criteria: life expectancy, susceptibility to exposure to sunlight, installed cost, ease of installation, and previous application.

Of the five materials evaluated, HDPE is recommended for the underground portion of the conveyance system between the well vaults and the transfer compound due to the low cost, light weight, superior resistance to TCE over PVC, and greater flexibility, allowing for easier handling and installation. PVC is recommended for the aboveground piping at the transfer compound because it has a lower expansion coefficient and is less likely to warp from exposure to sunlight and temperature variations. However, PVC pipe will have to be painted to protect it from UV radiation.

D7. REFERENCES

British Columbia (BC) Ministry of Agriculture. 1977. *Irrigation Factsheet: Pressure Ratings of PVC Pipe for Irrigation*. Resource Management Branch, Abbottsford, BC. April.

Chen, Hsien, PhD. 2003. Personal communication with Dr. Hsien Chen, Senior Program Director (Earth Tech), regarding pump and treat systems for TCE-contaminated water in Santa Barbara, California. 14 May.

Department of the Navy (DON). 2002. *Record of Decision, Operable Unit 1, Site 18 – Regional Volatile Organic Compound Groundwater Plume, Operable Unit 2A, Site 24 – VOC Source Area, Former Marine Corps Air Station, El Toro, California*. San Diego, California: SWDIV. January.

Earth Tech, Inc. (Earth Tech). 2003 (in progress). *Preliminary Draft Technical Memorandum, Pre-Design Investigation for Shallow Groundwater Unit Remedy, IRP Site 24, Volatile Organic Compound Source Area, Former Marine Corps Air Station, El Toro, California*. San Diego, California: SWDIV.

George Fischer, Inc. (Fischer). 2002. *Industrial and High Purity Piping Systems*. Tustin, California.

Green, D. W., ed. 1984. *Perry's Chemical Engineers' Handbook*, 6th Edition. New York: McGraw-Hill Book Company.

Harrington Industrial Plastics, Inc. 2003. *Engineering Handbook for Industrial Plastic Piping Systems*.

International Programme on Chemical Safety (IPCS) and the Commission of the European Communities (CEC). 1993a. International Chemical Safety Cards: *Trichloroethylene*. URL: http://hazard.com/msds/mf/cards/file/0081.html.

———. 1993b. International Chemical Safety Cards: *Perchlorate*. URL: http://hazard.com/msds/mf/cards/file/0076.html.

McCaulou, Douglas R., D. G. Jewett, and S. G. Huling. 1995. "Nonaqueous Phase Liquids Compatibility with Materials Used in Well Construction, Sampling, and Remediation." EPA/540/S-95/503. July.

McMaster-Carr Supply Company. 2003. *Catalog No.108*. Los Angeles, California.

Mora, Rebecca. 2003. Personal communication with Rebecca Mora, Environmental Engineer. 15 May.

National Construction Estimator. 2003. Information obtained through Get-a-Quote.net, Online Construction Costs for Contractors. URL: http://www.get-a-quote.net

Nayyar, Mohinder L. 1992. *Piping Handbook*. New York: McGraw-Hill, Inc.

Plastics Pipes Institute, The. 2000. TR-19/2000, *Thermoplastics Piping for the Transport of Chemicals*. Washington, D.C. January.

United States Army Corps of Engineers (USACE). 2002. *Engineering and Design: Liquid Process Piping*. Washington. September.

Attachment 1
Physical and Chemical
Properties of Contaminants of Concern

Properties of Trichloroethene

TCE is a strong solvent commonly used in aircraft maintenance operations. TCE is a colorless liquid with a characteristic sweet odor, and the vapor is heavier than air. The main chemical dangers of TCE include decomposition in the presence of heat or flames, forming toxic and corrosive substances such as phosgene ($COCl_2$), hydrochloric acid, and chlorine (IPCS 1993a). TCE also decomposes on contact with strong alkali producing dichloroacetylene, which increases its fire hazard. TCE reacts violently with metals such as lithium, magnesium, aluminum, titanium, barium, and sodium. The compound is also slowly decomposed by light in the presence of moisture, producing corrosive hydrochloric acid.

The federal and state maximum contaminant level for TCE in drinking water is 5 µg/L or approximately 5 parts of TCE per billion parts water (ppb). The Occupational Safety and Health Administration (OSHA) has set an exposure limit of 100 parts per million (ppm) of air for an 8-hour workday, 40-hour workweek. Threshold limit values (TLVs) are set at 50 ppm (269 mg/m^3) and 200 ppm (1,070 mg/m^3) (IPCS 1993a).

Properties of Tetrachloroethene

Tetrachloroethene (PCE) is a manufactured chemical that is widely used for dry cleaning of fabrics and for metal-degreasing. It is also used to make other chemicals and is used in some consumer products. Other names for tetrachloroethene include perchloroethylene, PCE, and tetrachloroethylene. It is a nonflammable liquid at room temperature.

PCE is a colorless liquid with a characteristic, sweet odor and the vapor is heavier than air. The main chemical dangers of PCE include decomposition in the presence of heat or flames forming toxic and corrosive substances such as phosgene ($COCl_2$), hydrochloric acid, and chlorine (IPCS 1993b).

The federal and state maximum contaminant levels for PCE in drinking water are both 5µg/L or approximately 5 parts of PCE per billion parts water (ppb). OSHA has set an exposure limit of 100 ppm of air for an 8-hour workday, 40-hour workweek. TLVs are set at 50 ppm (339 mg/m^3) and 200 ppm (1,357 mg/m^3) (IPCS 1993b).

Properties of Perchlorate

Perchlorate is both a naturally occurring and man-made chemical. Perchlorates are powerful oxidizing agents that are very unstable and react explosively under certain conditions. Potassium perchlorate, $KClO_4$, is perhaps the most widely used (e.g., in matches, fireworks, and explosives). Most of the perchlorate manufactured in the United States is used as the primary ingredient of solid rocket propellant. Perchlorate found in soil and groundwater is associated with wastes from the manufacture and improper disposal of perchlorate-containing chemicals.

Effective in January 2001, the State of California added perchlorate to the list of Unregulated Chemicals Requiring Monitoring, defined as those that lack drinking water standards but nonetheless require analysis. The new action level for perchlorate is 4 µg/L, as listed in Title 22 of the California Code of Regulations §64450.

APPENDIX E

Structural and Pump Size Calculations

Structural Calculations for
Upright Tank Lateral Restraints and Tank Anchor Bolts
By
Lane Engineers, Inc

LANE ENGINEERS, INC.

979 N. Blackstone
Tulare, CA 93274
Phone: (559) 688-5263
FAX: (559) 688-8893

REGISTERED PROFESSIONAL ENGINEER
Lawrence J. Simonetti
No. 3299
Exp. 6-30-06
8-25-04
STRUCTURAL
STATE OF CALIFORNIA

UPRIGHT TANK LATERAL RESTRAINTS

Customer: Weston Solutions
Installation Location: 7000 Trabuco Rd. SGU-24 Plant Near Bldg. 358;
Irvine, CA
Tank Manufacturer: Poly Processing Company

By: L. J. Simonetti Date: August 25th, 2004 Job No.:04266

****

INDEX

CALCULATIONS:

Governing Code: 1997 Uniform Building Code
Site Location: Zone 4; Greater than 5km from a "Source Type B" fault.
Design Parameters: Zone 4; Assumes tank is located closer than 2km from a "Source Type B" fault or greater than 5km from a "Source Type A" fault.

Calculations for "SAFE Tank" 5,400 Gallon Model SAFE-5400
Outdoor Calculation Package ..... O-1 → O-5
Capacity Calculations for *AC-13* Base Clip ..... 13-1 → 13-4

DRAWINGS:

DRAWING NO.	DATE
SAFE-07	06/27/02
D01	09/01/98
D03	09/01/98

POLY PROCESSING COMPANY

LATERAL RESTRAINT SYSTEM FOR UPRIGHT TANKS

1997 UNIFORM BUILDING CODE

LANE ENGINEERS, INC.
P.O. Box 1059, Tulare, CA 93275
PH: (559) 688-5263 -- FAX: (559) 688-8893

Sheet: SAFE-5400
Date: 5/26/2004
By: DKA

TANK TYPE: Closed-Top "SAFE" Tank

TANK No. SAFE 5400 (Model No. 42005400)

Max. Capacity	=	5,447 Gal
Diameter	=	11.917 ft.
Height	=	9.708 ft.
T (U.B.C.)	=	0.1100 seconds (Method A)
T (API 650)	=	2.0022 seconds (First Sloshing Mode)

WEIGHTS (S. G. = 1.9)

Empty	=	1,300 lbs.
Contents	=	86,336 lbs.
Total Weight	=	87,636 lbs.
# Cables	=	6 (4 through 12)
# Base Clips	=	6 (4, 6, 8,10,12)

WIND LOADING (100 MPH, Expos. D, Cq = 0.80, I = 1.15; Tank Empty):

Pressure 1	=	32.74 psf (0'<height<=15')
Pw	=	3,787 lbs.
OTM	=	18,384 ft.-lbs.
RM	=	27,576 ft.-lbs. (Includes surcharge due to cable tension)
RM/OTM	=	1.5

REGISTERED PROFESSIONAL ENGINEER
Lawrence J. Simonetti
No. 3299
Exp. 6-30-06
8-15-04
STRUCTURAL
STATE OF CALIFORNIA

SEISMIC LOADING (ρ = 1.0, R = 2.9, I = 1.25, Soil Type Sd; Tank Full):

Seismic Zone	=	4 (1, 2A, 2B, 3 or 4)	Ca = 0.484	
EQ Source	=	B (A, B or C: Applies to Seismic Zone 4)	Cv = 1.024	
Dist. to Source	=	2 km (2, 5, 10 or 15: Applies to Zone 4)	Na = 1.100	(Zone 4)
E = ρ*V	=	38,681 lbs. (U.B.C. Equ. 34-3 Governs)	Nv = 1.600	(Zone 4)
E / 1.4	=	27,629 lbs. (ASD, U.B.C. Section 1612.3.2, Equ. 12-13)		
OTM	=	134,112 ft.-lbs.		
RM	=	443,854 ft.-lbs. (Includes 0.85 factor for vertical EQ considerations)		
RM/OTM	=	3.3096		

REQUIRED BASE CLIP RESTRAINTS (F'c = 2500 PSI):

CASE 1: TANK EMPTY + WIND

Maximum Cable Tension	555 lbs.
Maximum Shear per Clip	2,187 lbs.
Anchor Bolt Shear	1,093 lbs.
Anchor Bolt Tension	941 lbs.

CASE 2: TANK FULL + SEISMIC

Kinetic Friction Factor	0.27
Maximum Shear per Clip	2,291 lbs.
Anchor Bolt Shear	1,145 lbs.
Anchor Bolt Tension	695 lbs.

BASE CLIP STRESS:

Bend. Stress = 9,817 psi -- O.K.

CONCRETE BEARING STRESS:

Bear. Stress = 115 psi -- O.K.

ANCHORS:

For 'HILTI' 7/8"dia. 'HVA' w/ 6-5/8" Embed. :

Allow. V =	6,324 lbs.
Allow. T =	8,148 lbs.
Comb. Stress =	0.2883 -- O.K.

6 - AC13 BASE CLIPS (L8x6x1/2 x 14") w/ 'HILTI' 7/8" DIA. "HVA" CHEMICAL ANCHORS w/ "HVU" RESIN AND "HAS" (STD OR STAINLESS) THREADED RODS w/ 6-5/8" MINIMUM EMBEDMENT INTO CONCRETE. INSTALL PER I.C.B.O. REPORT No. 5369. SPECIAL INSPECTION IS REQ'D.

6 - 1/4 in. DIA. CABLES FOR OUTDOOR INSTALLATIONS.

REGISTERED PROFESSIONAL ENGINEER
Lawrence J. Simonetti
No. 3299
Exp 6-30-02
STRUCTURAL
STATE OF CALIFORNIA

Outdoor Calculation Package "O"

Manufacturer:

Poly Processing Company
8055 South Ash Street
French Camp, CA 95231
PH: (209) 982-4904

Engineer:

Lane Engineers, Inc.
979 North Blackstone Ave
Tulare, CA 93277
PH: (559) 688-5263

Design Criteria, Unless Noted Otherwise:

Uniform Building Code (Published by I C B O)	1997 Edition
Wind Loading	100 MPH Basic, Exposure D
Seismic Loading	Zone 4, Source B, w/in 2 Km (See Note No. 3 below)
Tank Contents	Hazardous
Specific Gravity of Tank Contents	1.90
Carbon Structural Steel	ASTM A36
Stainless Structural Steel	ASTM A276, Type 304
Stainless Steel Cable	Federal Spec. MIL-W-83420

NOTES:

1. The purchaser shall be responsible for verifying local building code requirements and/or project specifications. Additional engineering assistance may be required to comply with local codes or individual project specifications.
2. Design of the tank foundation is beyond the scope of these calculations.
3. The *calculation data sheet* attached herewith reflects the design loading on the tank when it is located in Seismic Zone 4 within 2 kilometers of a fault classified as "Seismic Source B". *Special engineering assistance is required if the tank is located in Seismic Zone 4 within 5 kilometers of a fault classified as "Seismic Source A"* Location and layout of actively-known faults in the State of California is shown in the I.C.B.O. publication "*Maps of Known Active Fault Near-Source Zones in California & Adjacent Portions of Nevada*".

LANE ENGINEERS, INC.

Post Office Box 1059 • Tulare, California 93275 • (209) 688-5263
FAX - (209) 688-8893

PROJECT	1997 U.B.C. LATERAL RESTRAINT SYSTEM		SHEET	O-2	OF 5
CLIENT	POLY PROCESSING COMPANY		JOB NO.	98098	
BY	DKA	CHKD BY DKA	DATE	August 1, 1998	

1997 U.B.C. --- OUTDOOR TANK INSTALLATION PACKAGE

1. Wind Loading (Chapter 16, Division III):
   a) Pressures:
      $P_w = C_e*C_q*q_s*I_w*$(Exposed Area)
      Use 100 MPH, Exposure D:
      w_1 (0< H <15') =
      1.39*0.80*25.6 psf*1.15 = 32.74 psf
      w_2 (15'< H <20') =
      1.45*0.80*25.6 psf*1.15 = 34.15 psf
      $P_w = w_1*h_1*D + w_2*h_2*D$ (If H ≤ 15', h_2 = 0)

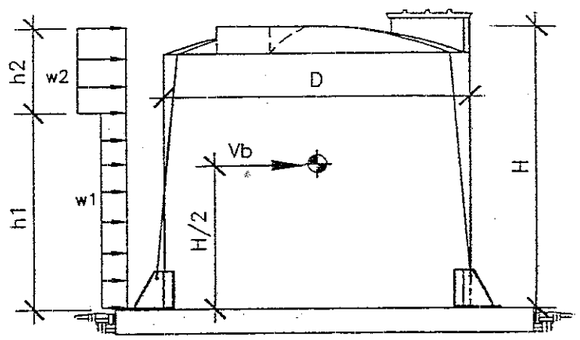

   b) Stability:
      Mot = $(w_1*h_1*D)*(h_1/2) + (w_2*h_2*D)*(h_1 + h_2/2)$
      Mr = (weight of empty tank) * D/2
      A safety factor of 1.50 is required for wind over-turning stability if H/D is greater than 0.50 (Section 1621.1).

2. Seismic Loading (Chapter 16, Division IV):
   "Non-Building Structure", flexible [§1634.4 & 1634.5]. Design parameters are noted on the cover page. Determine the period of the tank, comparing U.B.C. Method A with the "First Sloshing Mode" period as derived from Standard 651 by the American Petroleum Institute:

   U.B.C. Method A [§1630.2.2.1]:
   $T = Ct\,(H)^{3/4}$

   First Sloshing Mode [A.P.I. 650, §E3.3.2 & Figure E-4]:
   $T = k\,(D)^{1/2}$

   Typical parameters: ρ = 1.0 [§1634.1.2], R=2.9 [Table 16-P], Soil profile S_D [§1629.3], Max Na = 1.1 [§1629.4.2], I = 1.25 [Table 16-K] & Z = 0.40 [Table 16-I].

   Base shear equations:
   ① Vb = (Cv*I*W) / R*T), where Cv = 0.64*Nv : Standard equation [U.B.C. Eq. 30-4].
   ② Vb = (2.5*Ca*I*W) / R, where Ca = 0.44*Na: Need not exceed this value [U.B.C. Eq. 30-5]
   ③ Vb = 0.56*Ca*I*W: Must be greater than this value [U.B.C. Eq. 34-2]
   ④ Vb = (1.6*Z*Nv*I*W) / R: For seismic zone 4, must also be greater than this value [U.B.C. Eq. 34-3].

LANE ENGINEERS, INC.

Post Office Box 1059 • Tulare, California 93275 • (209) 688-5263
FAX - (209) 688-8893

PROJECT	1997 U.B.C. LATERAL RESTRAINT SYSTEM			SHEET	O-3 OF 5
CLIENT	POLY PROCESSING COMPANY			JOB NO.	98098
BY	DKA	CHKD BY	DKA	DATE	August 1, 1998

From Section 1630.1.1: $E = \rho * Eh + Ev$
For allowable stress design, $Ev = 0$ and $Eh = Vb$ (see above)

b) Stability:
$Mot = V_b * H/2$
$Mr = W * D/2 * 0.85$
→Using a 15% reduction of resisting DL to account for vertical seismic effects per U.B.C. §1633.1.

3. Shear Loading to Base Clips:
a) Net lateral force resisted by base clips = P:
For Wind: $P = P_w$
For seismic loading, the net seismic force to the base clips = Total seismic - Frictional resistance.
$P = Vb - \mu(k) * W$ [$\mu(k)$ = "kinetic friction factor", determined by laboratory testing]

b) For 4 - clip system:
$Vc = P$

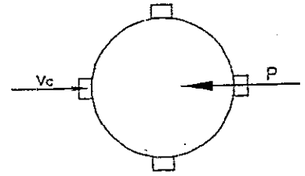

4 Base Clip System

c) For 6 - clip system:
$P = 2*Vc*\sin(60°) = 1.7321*Vc$
→ $Vc = 0.57735*P$

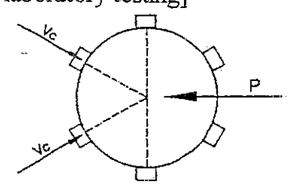

6 Base Clip System

d) For 8 - clip system:
$P = Vc + [2*Vc*\sin(45°)] = (1 + 1.4142)*Vc$
→ $Vc = 0.4142*P$

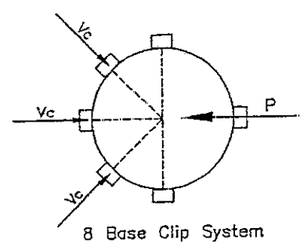

8 Base Clip System

e) For 10 - clip system:
$P = 2*Vc*\sin(36°) + 2*Vc*\sin(72°)]$
$= (1.1756 + 1.9021)*Vc$
→ $Vc = 0.3249*P$

f) For 12 - clip system:
$P = Vc + [2*Vc*\sin(30°)] + [2*Vc*\sin(60°)]$
$= (1 + 1 + 1.732) * Vc = 3.732*Vc$
→ $Vc = 0.2679*P$

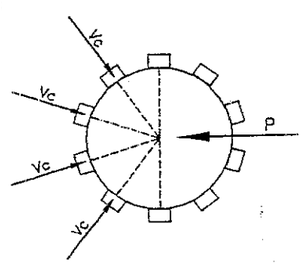

10 Base Clip System

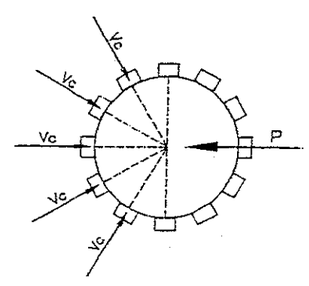

12 Base Clip System

4. Cable Tension Due To Wind Loading:
a) $\Sigma Ma = Mot - Mr - T*(D/2) = 0$
For wind, a 1.50 safety factor is required.

LANE ENGINEERS, INC.

Post Office Box 1059 • Tulare, California 93275 • (209) 688-5263
FAX - (209) 688-8893

$$T = \frac{2*[1.5*Mot-Mr]}{D*(no\ cables)}$$

b) For 4 - cables:

$$T = \frac{1.5*Mot-Mr}{D*2}$$

c) For 5 - cables:

$$T = \frac{2*(1.5*Mot-Mr)}{D*5}$$

d) For 6 - cables:

$$T = \frac{1.5*Mot-Mr}{D*3}$$

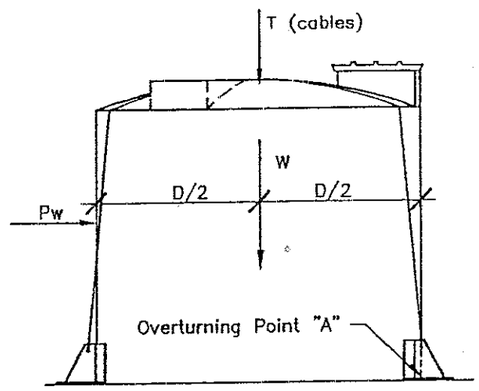

5. Cable Specifications:
   a) Federal Specification MIL-W-83420, 7x19 construction.

   b) A safety factor of 2.0 is applied to wire ropes, in accordance with EIA/ANSI/TIA Standard 222, Revision F.

   c) For galvanized composition (Type I, Comp. A):
      1/4" diameter rope: Breaking Strength = 7000#. Allow. Tension = 3500#.

   d) For stainless composition (Type I, Comp. B):
      1/4" diameter rope: Breaking Strength = 6400#. Allow. Tension = 3200#.

6. Example: Load Calculation for PPC Model No. SP707-U (Closed-top):
   a) Capacity = 16,400 lbs
      D = 14'-0"
      H = 16'-0"
      Empty Weight = 4,200 lbs

      Weight of Contents:
      Wc = S.G.*Cap *ρg(wtr)*(1cf / 7.48 gal.)

      $$Wc = \frac{1.90*16{,}400gal*62.4pcf}{7.48gal/cf} = 259{,}944 \text{ lbs}$$

   b) Wind Loading & Reactions (100 MPH, Exposure D):
      w_1 = 32.74 psf
      w_2 = 34.15 psf
      P_{w1} (due to w1) = 32.74 psf *14' *15' = 6875 lbs
      P_{w2} (due to w2)= 34.15 psf *14' *1' = 478 lbs

LANE ENGINEERS, INC.

Post Office Box 1059 • Tulare, California 93275 • (209) 688-5263
FAX - (209) 688-8893

PROJECT	1997 U.B.C. LATERAL RESTRAINT SYSTEM		SHEET	O-5	OF 5
CLIENT	POLY PROCESSING COMPANY		JOB NO.	98098	
BY	DKA	CHKD BY DKA	DATE	August 1, 1998	

$P_w = P_{w1} + P_{w2}$
Mot = 6875 lbs *(15'/2) + 478 lbs *(15' + 0.50') = 58,972 ft-lbs
Mr = 4,200 lbs *(14'/2) = 29,400 lbs

Cable Tension (Say 4 cables):

$$Tc = \frac{2*[1.5*58{,}972-29{,}400]}{14ft*4-cables} = 2{,}109 \text{ lbs}$$

Base Clip Reaction (Using 8 - clips):
Vc = 0.4142 *(7,353 lbs) = 3,046 lbs

c) Seismic Loading & Reactions (Zone 4, within 2 kilometers of "Seismic Source B" fault):
Total Weight = W = 259,944 + 4,200 = 264,144 lbs
Period of Tank [U.B.C. Method A] = $0.02*(16')^{3/4}$ = 0.16 seconds.
Period of First Sloshing Mode [A.P.I. 650] = $0.58*(14')^{1/2}$ = 2.171 seconds.

Base shear equations:
① Vb [U.B.C.] = (Cv*I*W) / (R*T) = (0.64*1.6*1.25)/(2.9*0.16)*W = 2.759*W
① Vb [A.P.I.] = (0.64*1.6*1.25)/(2.9*2.171)*W = 0.2033*W
② Vb = (2.5*Ca*I*W) / R = 0.5216*W ("Need not exceed...")
③ Vb = 0.56*Ca*I*W = 0.3388*W ("Minimum...")
④ Vb = (1.6*Z*Nv*I*W) / R = 0.4414*W ("Minimum for Zone 4...") → Governs all load cases.

Seismic force per allowable stress design = (0.4414/1.4)*W = 0.3153*264,144 lbs = 83,273 lbs

Overturning Moment = 83,273 lbs *(16'/2) = 666,184 ft-lbs
Resisting Moment = 264,144 lbs *(14'/2)*0.85 = 1,571,657 ft-lbs → Tank is stable against overturning.

For a kinetic friction factor of 0.27 (polyethylene to concrete, flat surface, 8 - clips):
Vc = 0.4142 *[83,273 lbs - 0.27*264,144 lbs] = 4,952 lbs

For anchor bolt analysis, refer to base clip calculations.

Calculation Package "AC13" for AC-13 Base Clips

REGISTERED PROFESSIONAL ENGINEER
Lawrence J. Simoneth
No. 3299
Exp. 6-30-02
9-24-01
STRUCTURAL
STATE OF CALIFORNIA

Manufacturer:

Poly Processing Company
8055 South Ash Street
French Camp, CA 95231
PH: (209) 982-4904

Engineer:

Lane Engineers, Inc.
979 North Blackstone Ave
Tulare, CA 93277
PH: (559) 688-5263

Design Criteria, Unless Noted Otherwise:

Uniform Building Code (Published by I.C.B.O.)	1997 Edition
Wind Loading	100 MPH Basic, Exposure D
Seismic Loading	Zone 4, Source B, w/in 2 Km (See Note No. 3 below)
Carbon Structural Steel	ASTM A36
Stainless Structural Steel	ASTM A276, Type 304

NOTES:

1. The purchaser shall be responsible for verifying local building code requirements and/or project specifications. Additional engineering assistance may be required to comply with local codes or individual project specifications.
2. Design of the tank foundation is beyond the scope of these calculations.
3. The *calculation data sheet* attached herewith reflects the design loading on the tank when it is located in Seismic Zone 4 within 2 kilometers of a fault classified as "Seismic Source B". *Special engineering assistance is required if the tank is located in Seismic Zone 4 within 5 kilometers of a fault classified as "Seismic Source A".* Location and layout of actively-known faults in the State of California is shown in the I.C.B.O. publication "*Maps of Known Active Fault Near-Source Zones in California & Adjacent Portions of Nevada*".

LANE ENGINEERS, INC.

Post Office Box 1059 • Tulare, California 93275 • (209) 688-5263
FAX - (209) 688-8893

PROJECT	1997 U.B.C. RESTRAINTS	SHEET	13-2 OF 4
CLIENT	POLY PROCESSING COMPANY	JOB NO.	98098
BY	DKA CHKD BY DKA	DATE	August 1, 1998

1997 U.B.C. — PACKAGE AC13: BASE CLIP "AC-13" CAPACITY

1. Parameters:
   a) For outdoor installations, the base clips resist loads imposed by wind or seismic forces.
   b) Cables will be attached to the base clips to resist tank overturning due to wind loading.
   c) The combination of applicable forces will be transferred to the anchor bolts (2 at each base clip) by a combination of the sliding and overturning action of the base clips.

2. Base Clip AC-13 (L8x6x½ x 14" long):

Vertical leg = 6"
Horizontal leg = 8"
Length = 14"
Lateral load is applied at 3" up from the concrete surface (dimension "h").
Anchor bolts are located at 2¼" from the vertical face (dimension a = 5¾").

REGISTERED PROFESSIONAL ENGINEER
Lawrence J. Simonetti
No. 3299
Exp. 5-30-02
9-24-01
STRUCTURAL
STATE OF CALIFORNIA

Assume 7,600 lb. lateral load:
∴ Vc = 7,600 lbs

$$Mc = \frac{Vc*(h-t)}{L} = \frac{7{,}600*(3.0-0.50)}{14} = 1{,}357 \text{ in-lbs/in}$$

$$t\,(\text{req'd}) = \sqrt{\frac{6*Mc}{0.75*Fy*1.33}} = \sqrt{\frac{6*1{,}357}{0.75*30{,}000*1.33}} = 0.521" \approx 0.50", \text{ o.k.}$$

Therefore, L8x6x½ x 14" long can resist a 7,600 lb. lateral load.

3. Anchor Bolt Forces:

REF: "*Design in Structural Steel*"; Lothers, 3rd Edition.

$$n = Es/Ec = \frac{29x10^6}{57x10^3*\sqrt{2500}} = 10.175$$

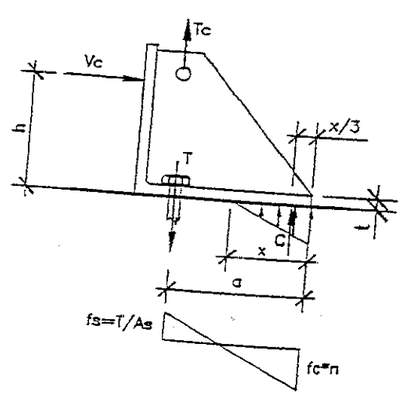

For AC-13 & 2 - 'HILTI' ⅞" dia. chemical anchors:
As = 2*0.6013 = 1.2026 in² (2 anchors at each base clip)
B = 14"
$Bx^2 + (2*n*As)x - (2*n*As*a) = 0$

LANE ENGINEERS, INC.

Post Office Box 1059 • Tulare, California 93275 • (209) 688-5263
FAX - (209) 688-3893

$$14x^2 + (2*10.18*1.2026)x - (2*10.18*1.2026*5.75) = 0$$
$$\rightarrow x = 2.415"$$

REGISTERED PROFESSIONAL ENGINEER
Lawrence J. Simpfenth
No. 3299
Exp 6-30-02
8-24-01
STRUCTURAL
STATE OF CALIFORNIA

$$T\ (total) = \frac{Vc*h}{a-\frac{x}{3}} + Tc = \frac{Vc*3.00}{5.75-\frac{2.415}{3}} + Tc = 0.6067*Vc + Tc$$

Anchor bolt tension = Tb = T/2 = 0.3033*Vc + Tc/2
Maximum concrete bearing stress = C = (fc*B*x)/2 = T - Tc

$$fc = \frac{2*1.4*(T-Tc)}{B*x} = 0.08282*(T - Tc)$$

Maximum shear per bolt = Vb = Vc/2

Anchor bolt forces (Using Tc = 0 → Actual data sheets compare wind & seismic w/ allowables):
Tb = 0.3033*7,600 = 2,305 lbs
Vb = 7,600/2 = 3,800 lbs

4. Allowable Anchor Bolt Forces:

Allowable Forces per I.C.B.O. Report No. 5369 (stainless steel, with spec. insp.):
Spacing required for maximum load = 2*6.625" = 13.25" [Mult. Factor = 1.0]
Spacing required for minimum load = 0.50*6.625" = 3.3125" [Mult. Factor = 0.70]
For 11" anchor spacing, multiplication factor = 0.93
For a temperature of 105° F, multiplication factor = 0.86 [Figure 2]
T (allow) = 7,641 lbs * 1.33 * 0.93 * 0.86 = 8,149 lbs
V (allow) = 5,930 lbs * 1.33 * 0.93 * 0.86 = 6,324 lbs

$$\text{Combined Stress Ratio} = \frac{2{,}305\,lbs}{8{,}149\,lbs} + \frac{3{,}800\,lbs}{6{,}324\,lbs} = 0.884,\ \text{o.k.}$$

5. Verify Concrete Bearing:

F'c = 0.70*0.85*2,500 psi = 1,488 psi [U.B.C. Section 1910.17.1]

$$fc = \frac{2*1.4*(T-Tc)}{B*x} = \frac{2*1.4*4{,}611}{14*2.415} = 382\ \text{psi} < F'c,\ \text{o.k.}$$

LANE ENGINEERS, INC.

Post Office Box 1059 • Tulare, California 93275 • (209) 688-5263
FAX - (209) 688-3893

PROJECT	1997 U.B.C. RESTRAINTS		SHEET	13-4	OF 4
CLIENT	POLY PROCESSING COMPANY		JOB NO.	98098	
BY	DKA	CHKD BY DKA	DATE	August 1, 1998	

AC-13 BASE CLIP: L8x6x½ x 14" long, LLH. Stainless or carbon steel.

ANCHOR BOLTS:

2 - ⅞" dia. "HILTI" HVA chemical anchors with HAS rods (std or stainless) and HVU resin with 6¾" embedment into concrete. Install per I.C.B.O. Report No. 5369. Special inspection is required.

REGISTERED PROFESSIONAL ENGINEER
Lawrence J. Simonetti
No. 3299
Exp. 6-30-02
9-01-01
STRUCTURAL
STATE OF CALIFORNIA

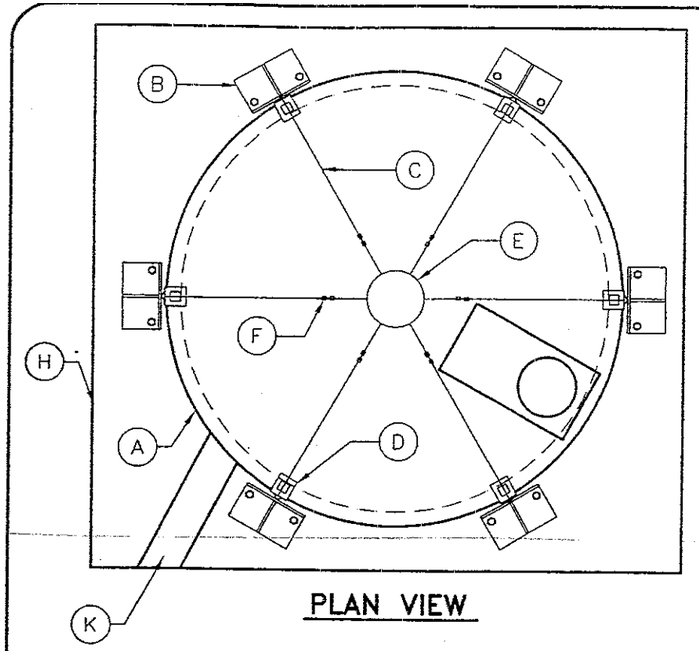

PLAN VIEW

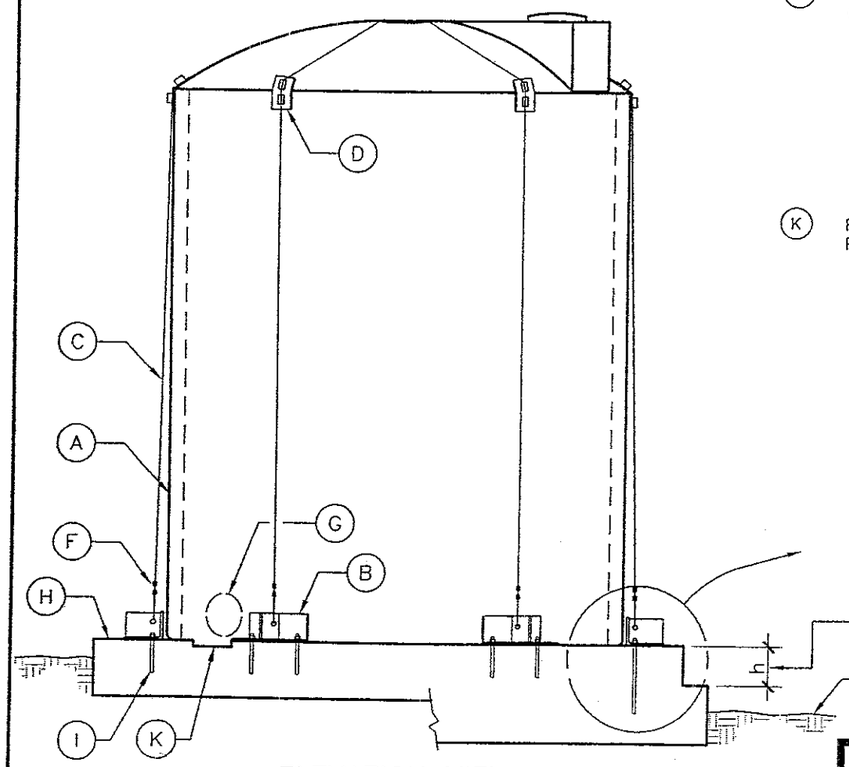

ELEVATION VIEW

NO SCALE

KEY NOTES

(A) POLYETHYLENE TANK

(B) AC-13 BASE CLIP (6-TOTAL): L8x6x1/2"x1'-2" (LLH) EQUALLY SPACED

(C) 1/4"ø CABLE (6-TOTAL) SEE DWG. No. D01

(D) EDGE SOFTENER (6-TOTAL) 1/8"x4"x8' FLAT BAR (BENT)

(E) TENSION RING

(F) CABLE CLAMP (24 TOTAL) SEE DWG. NO. D03

(G) OPENING FOR IMFO TANKS

(H) CONCRETE SLAB/FOOTING & REINFORCEMENT DESIGNED BY OTHERS.

(I) 7/8"ø ASTM F593 (TYPE 316 STAINLESS) THREADED ROD. SECURE ROD INTO CONCRETE WITH "HILTI" HVU RESIN (HVA SYSTEM). EMBED ROD 6 5/8" MIN. INTO CONCRETE. INSTALL PER ICBO REPORT NO. 5389 AND PROVIDE SPECIAL INSPECTION FOR ALL ANCHOR INSTALLATIONS (12-TOTAL)

(J) HOUSEKEEPING PAD IS DESIGNED BY OTHERS. ANCHORAGE OF BASE CLIPS SHALL BE AS FOLLOWS:

CASE A: PAD PLACED MONOLITHICALLY WITH FOOTING. ANCHOR LENGTH SHALL BE AS SPECIFIED IN KEY NOTE (I)

CASE B: PAD PLACED SEPARATE FROM FOOTING (i.e. COLD JOINT BETWEEN PAD & FOOTING). ANCHOR LENGTH SPECIFIED IN KEYNOTE (I) SHALL BE INCREASED BY 'h'.

(K) FOR IMFO TANKS, DEPRESS CONCRETE SLAB/FOOTING AT IMFO FLANGE/PIPING AS REQUIRED (DESIGNED BY OTHERS)

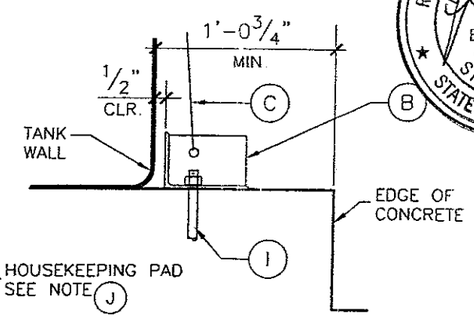

REGISTERED PROFESSIONAL ENGINEER
Lawrence J. Simonetti
No. 3299
Exp. 6-30-06
9-25-04
STRUCTURAL
STATE OF CALIFORNIA

SEISMIC DESIGN NOTE: IF TANK IS LOCATED W/IN 5 KM. OF A "SOURCE A" FAULT, SPECIAL ENGINEERING ASSISTANCE IS REQUIRED. REFER TO I.C.B.O. PUBLICATION "MAPS OF KNOWN ACTIVE FAULT NEAR-SOURCE ZONES"

GENERAL NOTES

1. THE CONTRACTOR SHALL BE RESPONSIBLE FOR COORDINATING THE WORK OF ALL TRADES AND SHALL VERIFY ALL DIMENSIONS, CONDITIONS AND UTILITY LOCATIONS PRIOR TO STARTING WORK.
2. NOTES AND DETAILS ON THESE DRAWINGS SHALL TAKE PRECEDENCE OVER THESE GENERAL NOTES.
3. THE CONTRACTOR SHALL USE ADEQUATE NUMBERS OF SKILLED WORKMEN WHO ARE COMPLETELY FAMILIAR WITH THE SPECIFIED REQUIREMENTS AND METHODS NEEDED FOR PROPER PERFORMANCE OF THE WORK.
4. CONCRETE SHALL HAVE A 28 DAY COMPRESSIVE STRENGTH (F'c) OF 2500 PSI MINIMUM.
5. DESIGN CRITERIA:

   GOVERNING CODE: UNIFORM BUILDING CODE 1997 EDITION.
   SEISMIC: ZONE 4 W/IN 2 KM OF "SOURCE B" FAULT I=1.25.
   WIND: 100 MPH BASIC EXPOSURE D, Iw=1.15 Cq=0.80
   SPECIFIC GRAVITY OF CONTENTS=1.9

6. THE PURCHASER SHALL BE RESPONSIBLE FOR VERIFYING LOCAL BUILDING CODE REQUIREMENTS AND/OR PROJECT SPECIFICATIONS. ENGINEERING ASSISTANCE MAY BE REQUIRED TO COMPLY WITH LOCAL CODES OR INDIVIDUAL PROJECT SPECIFICATIONS.

STRUCTURAL STEEL NOTES

1. ALL STRUCTURAL AND MISCELLANEOUS SHAPES AND PLATES SHALL BE FABRICATED IN ACCORDANCE WITH AISC "SPECIFICATION FOR THE DESIGN, FABRICATION AND ERECTION OF STRUCTURAL STEEL FOR BUILDINGS", LATEST EDITION. CARBON STEEL SHAPES & PLATES SHALL CONFORM TO ASTM A36 OR A572 (36 KSI MINIMUM YIELD STRENGTH).
2. ALL WELDING SHALL BE DONE BY QUALIFIED WELDERS USING A PRE-APPROVED PROCESS. ALL WELDS SHALL BE UNIFORM IN SIZE AND APPEARANCE AND FREE OF PINHOLES, POROSITY, UNDERCUTTING OR OTHER DEFECTS.
3. ALL WELDING SHALL CONFORM TO AWS D1.1-98 OF THE STRUCTURAL WELDING CODE. JOINT DETAILS SHALL COMPLY WITH AWS REQUIREMENTS FOR JOINTS ACCEPTED WITHOUT QUALIFICATION TESTS.
4. WELD METAL SHALL HAVE A NOMINAL TENSILE STRENGTH OF 70,000 PSI MINIMUM.
5. UNLESS NOTED OTHERWISE STANDARD FINISH OF ALL RESTRAINT SYSTEM HARDWARE IS HOT-DIPPED GALVANIZED IN ACCORDANCE WITH ASTM A153. OTHER FINISHES AVAILABLE UPON REQUEST.
6. STAINLESS STEEL SHAPES CONFORMING TO ASTM A276 TYPE 304 OR 316 (30 KSI MINIMUM YIELD STRENGTH) MAY BE SUBSTITUTED FOR CARBON STEEL SHAPES.
7. STAINLESS STEEL PLATES CONFORMING TO ASTM A167 TYPE 304 OR 316 (30 KSI MINIMUM YIELD STRENGTH) MAY BE SUBSTITUTED FOR CARBON STEEL PLATES.

ANCHOR BOLTS

1. ANCHOR BOLTS SHALL BE FURNISHED AND INSTALLED AS SPECIFIED ON THIS DRAWING. ANCHOR BOLTS ARE NOT FURNISHED BY POLY PROCESSING COMPANY.
2. THE MINIMUM DISTANCE SHOWN FROM THE EDGE OF THE CONCRETE TO THE FACE OF THE TANK IS BASED ON INFORMATION FROM THE I.C.B.O. REPORT REFERENCED ON THIS DRAWING. IF THE ACTUAL DISTANCE IS LESS THAN THAT SHOWN, SPECIAL ENGINEERING ASSISTANCE IS REQUIRED.
3. SPECIAL INSPECTION MUST BE PROVIDED FOR ALL ANCHOR INSTALLATIONS. SEE SPECIAL INSPECTION NOTES ON THIS DRAWING.

SPECIAL INSPECTION NOTES

1. THE OWNER SHALL EMPLOY A QUALIFIED SPECIAL INSPECTOR WHO SHALL PROVIDE INSPECTION SERVICES TO VERIFY THAT THE INSTALLATION OF ANCHORS IS BEING PERFORMED IN ACCORDANCE WITH THE REFERENCED I.C.B.O. REPORT.
2. THE SPECIAL INSPECTOR SHALL SUBMIT A REPORT OR SERIES OF REPORTS TO THE BUILDING OFFICIAL, AND OTHER DESIGNATED PERSONS, STATING WHETHER THE ANCHOR INSTALLATION WAS, TO THE BEST OF THE INSPECTORS KNOWLEDGE, IN CONFORMANCE WITH APPROVED PLANS AND SPECIFICATIONS.
3. ALL DISCREPANCIES OBSERVED BY THE INSPECTOR SHALL BE BROUGHT TO THE ATTENTION OF THE CONTRACTOR FOR CORRECTION, THEN, IF UNCORRECTED, TO THE ENGINEER AND TO THE BUILDING OFFICIAL.

CONFIDENTIAL PROPERTY OF POLY PROCESSING CO.

NOT FOR REPRINT OR USE WITHOUT PERMISSION OF POLY PROCESSING CO.

LANE ENGINEERS INC.
CIVIL • STRUCTURAL • SURVEYING
979 N. Blackstone Street
Tulare, California 93274
(559) 688-5263

REVISIONS

MANUFACTURER:
POLY PROCESSING CO.
WESTERN REGION
8055 South Ash Street
French Camp, CA 95231
PH: (209) 982-4904

UPRIGHT "SAFE" TANK RESTRAINTS:
CLOSED TOP OUTDOOR

NAME	J.A.
DATE	6-27-02
SCALE	NOTED
CHECKED	D.K.A.
DRAWING NO.	SAFE-07
JOB NO	02167

SAFE-07.dwg 6-27-02 1:36:52 pm EST

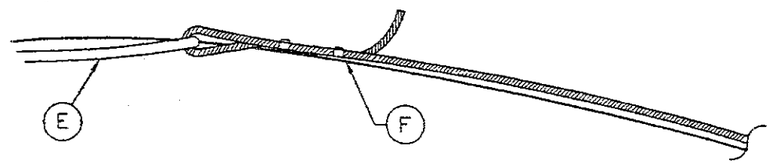

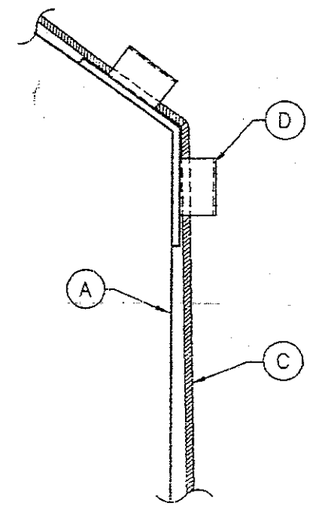

STRUCTURAL STEEL NOTES

1. ALL STRUCTURAL AND MISCELLANEOUS SHAPES AND PLATES SHALL BE FABRICATED IN ACCORDANCE WITH AISC "SPECIFICATION FOR THE DESIGN, FABRICATION AND ERECTION OF STRUCTURAL STEEL FOR BUILDINGS", LATEST EDITION. CARBON STEEL SHAPES & PLATES SHALL CONFORM TO ASTM A36 OR A572 (36 KSI MINIMUM YIELD STRENGTH).
2. ALL WELDING SHALL BE DONE BY QUALIFIED WELDERS USING A PRE-APPROVED PROCESS. ALL WELDS SHALL BE UNIFORM IN SIZE AND APPEARANCE AND FREE OF PINHOLES, POROSITY, UNDERCUTTING OR OTHER DEFECTS.
3. ALL WELDING SHALL CONFORM TO AWS D1.1-98 OF THE STRUCTURAL WELDING CODE. JOINT DETAILS SHALL COMPLY WITH AWS REQUIREMENTS FOR JOINTS ACCEPTED WITHOUT QUALIFICATION TESTS.
4. WELD METAL SHALL HAVE A NOMINAL TENSILE STRENGTH OF 70,000 PSI MINIMUM.
5. UNLESS NOTED OTHERWISE, STANDARD FINISH OF ALL RESTRAINT SYSTEM HARDWARE IS HOT-DIPPED GALVANIZED IN ACCORDANCE WITH ASTM A153. OTHER FINISHES AVAILABLE UPON REQUEST.
6. STAINLESS STEEL SHAPES CONFORMING TO ASTM A276, TYPE 304 OR 316 (30 KSI MINIMUM YIELD STRENGTH) MAY BE SUBSTITUTED FOR CARBON STEEL SHAPES.
7. STAINLESS STEEL PLATES CONFORMING TO ASTM A167, TYPE 304 OR 316 (30 KSI MINIMUM YIELD STRENGTH) MAY BE SUBSTITUTED FOR CARBON STEEL PLATES.

CABLES

1. ALL CABLES SHALL BE 7x19 CONSTRUCTION, STAINLESS STEEL AIRCRAFT TYPE, CONFORMING TO ASTM A368, TYPE 304 OR 316.
2. GALVANIZED STEEL WIRE ROPES CONFORMING TO FEDERAL SPECIFICATION MIL-W-83420, TYPE I, COMPOSITION A, MAY BE SUBSTITUTED FOR STAINLESS CABLES.

KEY NOTES

- (A) POLYETHYLENE TANK
- (B) BASE CLIP
- (C) $\frac{1}{4}$"ø CABLE. TENSION TO SNUG TIGHT
- (D) EDGE SOFTENER
- (E) TENSION RING
- (F) CABLE CLAMPS: SEE DWG. No. D03
- (H) THIMBLE

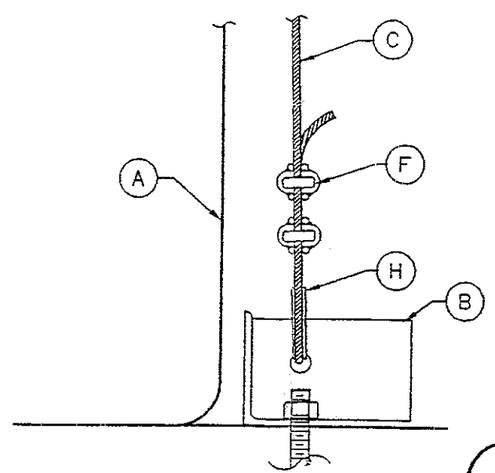

CABLE CONNECTION DETAIL

NO SCALE

REGISTERED PROFESSIONAL ENGINEER
Lawrence J. Simonetti
No. 3299
Exp. 6-30-02
STRUCTURAL
STATE OF CALIFORNIA

CONFIDENTIAL PROPERTY OF POLY PROCESSING CO.

NOT FOR REPRINT OR USE WITHOUT PERMISSION OF POLY PROCESSING CO.

LANE ENGINEERS INC.
CIVIL • STRUCTURAL • SURVEYING
979 N. Blackstone Street
Tulare, California 93274
(559) 688-5263

REVISIONS

MANUFACTURER:
POLY PROCESSING CO.
WESTERN REGION
8055 South Ash Street
French Camp, CA 95231
PH: (209) 982-4904

CABLE CONNECTION OUTDOOR TANK

NAME	T.C.
DATE	9-1-98
SCALE	NOTED
CHECKED	D.K.A.
DRAWING NO.	D01
JOB NO.	98098

D01.dwg 10-27-98 10:20:41 am EST

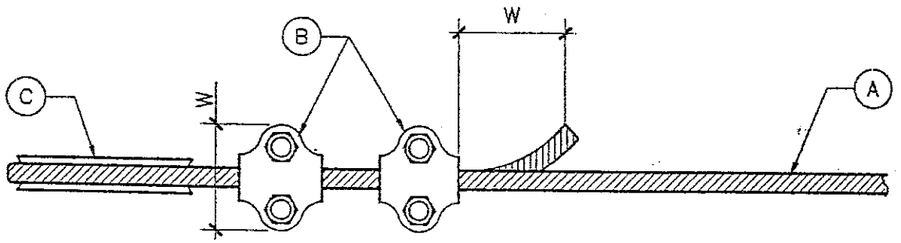

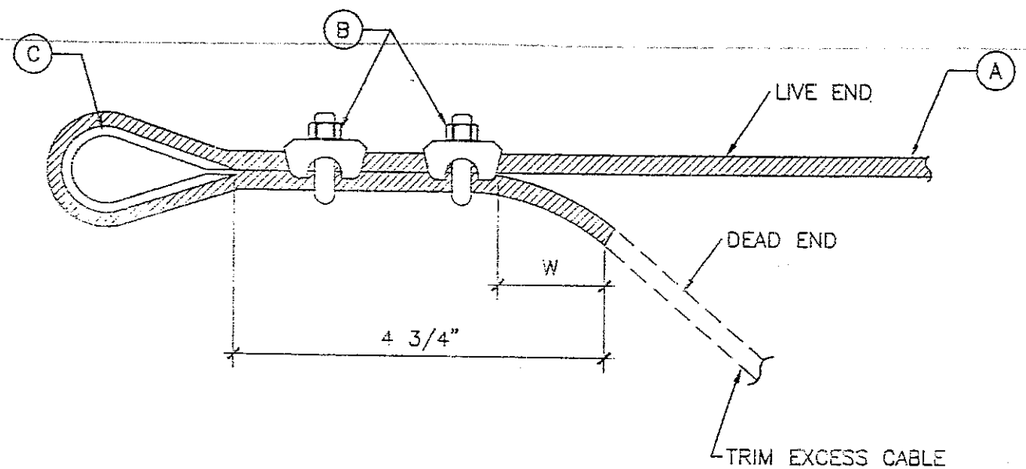

CABLES

1. ALL CABLES SHALL BE 7x19 CONSTRUCTION, STAINLESS STEEL AIRCRAFT TYPE, CONFORMING TO ASTM A368, TYPE 304
2. GALVANIZED STEEL WIRE ROPES CONFORMING TO FEDERAL SPECIFICATION MIL-W-83420, TYPE I, COMPOSITION A, MAY BE SUBSTITUTED FOR STAINLESS CABLES.

INSTALLATION OF CLIPS

1. TURN BACK THE SPECIFIED AMOUNT OF ROPE FROM THE THIMBLE. APPLY THE FIRST CLIP AT LOCATION SHOWN FROM THE DEAD END OF THE WIRE ROPE (U-BOLT OVER DEAD END; LIVE END RESTS IN CLIP SADDLE). TURN ON NUTS FIRM, BUT DO NOT TIGHTEN.
2. APPLY THE NEXT CLIP AS NEAR TO THE LOOP AS POSSIBLE. TURN ON NUTS FIRM, BUT DO NOT TIGHTEN.
3. TAKE UP ROPE SLACK AND TIGHTEN ALL NUTS EVENLY TO 15 lb/ft.
4. ROPE WILL STRETCH AND BE REDUCED IN DIAMETER WHEN LOADS ARE APPLIED. INSPECT PERIODICALLY AND RETIGHTEN NUTS TO 15 lb/ft.

KEY NOTES

(A) 1/4"ø CABLE

(B) U-BOLT CLIPS

(C) THIMBLE

REGISTERED PROFESSIONAL ENGINEER
Lawrence J. Simonetti
No. 3299
Exp 6-30-02
STRUCTURAL
STATE OF CALIFORNIA

CONFIDENTIAL PROPERTY OF POLY PROCESSING CO.

NOT FOR REPRINT OR USE WITHOUT PERMISSION OF POLY PROCESSING CO.

LANE ENGINEERS INC.
CIVIL • STRUCTURAL • SURVEYING
979 N. Blackstone Street
Tulare, California 93274
(559) 688-5263

REVISIONS

MANUFACTURER:
POLY PROCESSING CO.
WESTERN REGION
8055 South Ash Street
French Camp, CA 95231
PH: (209) 982-4904

CABLE CLAMPING

NAME	T.C.
DATE	9-1-98
SCALE	NONE
CHECKED	D.K.A.
DRAWING NO.	D03
JOB NO.	98098

D03.dwg 11-3-98 11:48:41 am EST

Structural Calculations for
Tank and Control Room Foundations
By
T. Mitchell Engineers and Associates

FOUNDATION CALCULATIONS
DEPARTMENT OF THE NAVY, SW DIV

SGU PUMPING STATION
EL TORO, CALIFORNIA

Prepared For
Weston Solutions
1575 Treat Blvd., Suite 212
Walnut Creek, CA 94598

T. Mitchell Engineers and Assoc.
5737 Thornhill Dr , Suite 207
Oakland, CA 94611
Phone: (510) 338-0520

November 3, 2004
Job # 0316

INTRODUCTION

The following analysis pertains to the tank and control building foundations associated with the new Shallow Groundwater Unit (SGU) Pump Station to be located in the east corner of the former MCAS El Toro facility. The pumping station consists of two 5500-gallon tanks, on a concrete slab, and a small pre-fabricated metal control building.

These calculations demonstrate the foundation systems for the proposed tanks and control building are capable of handling anticipated design combinations as described and in accordance with the current California Building Code (CBC).

This Analysis covers only the foundations. It is not the intent of this study to include the analysis of the entire SGU system design or performance of devices employed.

See vendor drawings and calculations for tank and building anchorage.

COMPUTATIONS

T.MITCHELL ENGINEERS & ASSOCIATES

DATE 11-2-04 CLIENT Weston Solutions JOB NO 0316
BY TA CHK ____ PROJECT El Toro - SGU

TANK FOUNDATIONS

* See Vendor Calcs

Seismic Governs

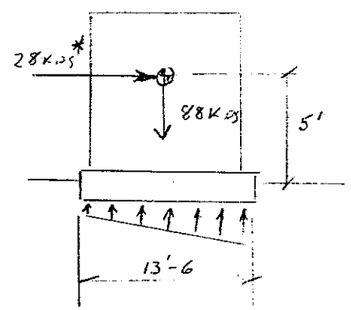

$$e = \frac{28\text{kip}(5')}{88\text{kip}}$$

$$= 1.6'$$

$$P_{max} = \frac{88\text{kip}}{(13.5')^2}\left(1 + \frac{6(1.6)}{(13.5')}\right)$$

$$= .83 \text{ kip}$$ OKay

$P_{Allow} = 2$ kip (see Soils Rpt)

Check Rient.

#5s @ 12" O.C. T&B

13'-6" / 12" = 13 BARS x 2 = 8.06 sq in

$\rho = 8.06 / 18" \times 162" = 0.0028$ OKay

5737 Thornhill Blvd. Suite 207, Oakland, CA 94611 - Ph 510-338-0520 - Fax 510-338-0521

COMPUTATIONS

T.MITCHELL ENGINEERS & ASSOCIATES

DATE 11-2-04 CLIENT WESTON SOLUTIONS JOB NO 0316
BY TT CHK ____ PROJECT EL TORO - 56K

OVERTURNING

$M_R = 4' \times 7.5^{-} = 30.0$ K-FT

$M_{OT} = 4.5' \times 2.4 = 10.8$ K-FT

$10.8 < 30$ OK

FOUNDATION,

$e = \frac{2.4k\,(4.5')}{7.5k} = 1.44'$

$P_{max} = \frac{7.5k}{8' \times 12'}\left(1 + \frac{6\,(1.44)}{12'}\right)$

$P_{max} = 134$ lbs

134 lbs < 2000 lbs OK

REINF,

4s @ 12" EW

8'/1' = 8 BARS = 1.6 sq in

$\rho = 1.6/6 \times 96 = .0027$ OK

5737 Thornhill Blvd. Suite 207, Oakland, CA 94611 • Ph 510-338-0520 • Fax 510-338-0521

COMPUTATIONS

T.MITCHELL ENGINEERS & ASSOCIATES

DATE 11-2-04 CLIENT WESTON SOLUTIONS JOB NO 0316
BY TL CHK ____ PROJECT EL TORO SGU

CONTROL BLDG:

WIND LOADS
SPEED 100mph
EXPOSURE B

$C_E = 0.62$
$C_q = 1.3$
$q_s = 25.6$
$I_w = 1.00$

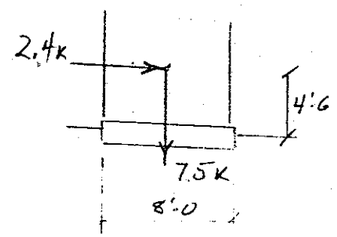

$P_w = 0.62(1.3)(25.6)(1.00)$
$= 20.6$ psf
$F_w = P_w \times A = 20.6 \times (9' \times 12')$
$= \underline{\underline{2230 \text{ lbs}}}$

Seismic Loads,
Zone 4 $(Z = 0.4)$
Source B < 2 km
$I = 1.15$
$R = 4.5$

$N_a = 1.1$
$C_a = .44$ $N_a = .484$

$V = \frac{3.0\, C_a}{R} W = \underline{\underline{2377 \text{ lbs}}}$

Seismic governs

5737 Thornhill Blvd Suite 207 Oakland CA 94611 • Ph 510-338-0520 • Fax 510-338-0521

30-Horsepower Pump Anchorage Calculations
By
R.B. Welty & Associates, Inc. Structural Engineers

Pump Anchorage
El Toro MCAS
Irvine, CA

For

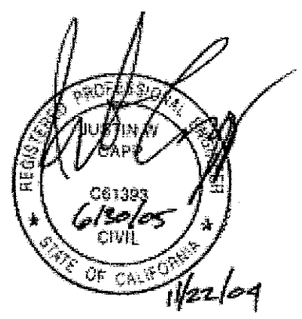

R.F. MacDonald Co.
Attn.: Mr. John Thyken
25920 Eden Landing Rd.
Hayward, CA 94545

Seismic Loads

UBC Element Anchorage Force: $F_p = (a_p C_a I_p / R_p)(1+3(h_x/h_r))W_p$

$F_{p,min} = 0.7 C_a I_p W_p$

Where:

a_p =	1	
C_a =	0.66	(Zone 4, Site Class D, N_a = 1.5))
I_p =	1	
R_p =	3	
h_x =	0 ft	(at grade)
h_r =	0.01	(at grade)

F_p at grade, strength level =	0.220 W_p
$F_{p,min}$ at grade, strength level =	0.462 W_p
Use $F_{p,min}$ for anchorage calculations	

Weight of assembly =	580 lbs ⟹ 155# PUMP + 425# MOTOR
F_p @ strength level =	268 lbs
F_p @ allowable stress level =	191 lbs
Effective height of centroid =	7 in.
Overturning Moment (ASD), M =	1340 in-lbs
Anchor bolt spacing, s =	11 in
Number of anchor bolts, N =	4
Max. shear per anchor, $V = F_p/N$ =	48 lbs (ASD)
Max. tension per anchor, P = M/(s x 2 bolts) =	61 lbs (ASD)

Use (4) 3/8" x 4 1/2" embed A304 SS threaded rods with Hilti HSE 2421 Epoxy - Minimum 6" edge distance

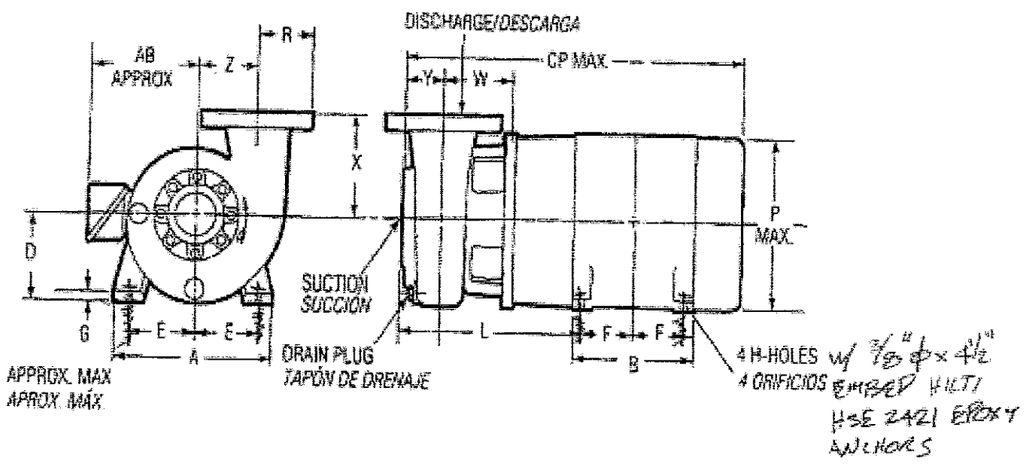

3656 M & L-Group Dimensions and Weights
Grupo M y L, modelo 3656 - Peso y dimensiones

Mechanical Seal
Sello mecánico

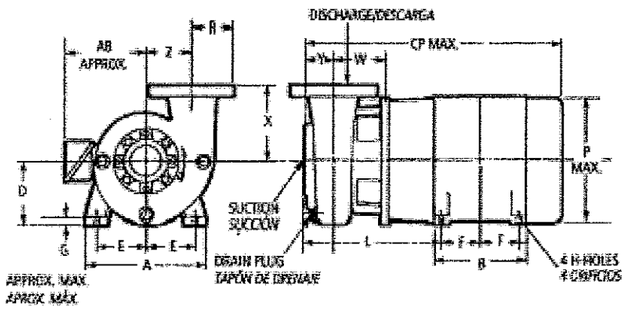

NOTE:
1. All pumps shipped in vertical discharge position. For other orientations, remove casing bolts, rotate to desired position, and tighten ⅝ - 16 casing bolts to 37 ft./lbs. torque., ¾ - 13 casing bolts to 90 ft./lbs. torque.
2. Dimensions in inches, weight in pounds.
3. Not to be used for construction purposes.

NOTA:
1. Todas las bombas se embarcan con la descarga en posición vertical. Para otras orientaciones, retire los pernos de la carcasa, haga rotar la descarga hasta la posición deseada y ajuste los 16 pernos de ⅝ de pulgada a una torsión de 37 piés/libra, y los 13 pernos de ¾ pulgada a 90 piés/libra.
2. Dimensiones en pulgadas, peso en libras.
3. No utilizar con fines de construcción.

Pump Dimensions and Weights (Dimension "L" determined by Pump and Motor)
Peso y dimensiones de la bomba *(la dimensión "L" está determinada por la bomba y el motor)*

Pump Bomba	Suction Succión	Discharge Descarga	CP Max	DC Max.	DD	R	NPT Drain Drenaje NPT	W	X	Y	Z	Weight (lbs) Pesos (libras)	L Motor Frame, Bastidor del motor 140	180	210	250/280	320	360
1½ x 2 – 10	2*	1½*	30¼	6⅝	5⅝	1¼	⅜	5	6	3	5⅛	93	10⅞	11⅞	12⅛	12¼	–	–
2½ x 3 – 8	3*	2½*	30⅝	6¼	5⅝	1 1/16		5⅛		3⅛	5	78	11⅛	12	13	13¼	–	–
2½ x 3 – 9	3	2½	33⅝	7¼	6	3⅛	⅜	5	7½	2⅝	5⅛	85	10⅞	11⅞	12⅛	12⅛	13	13⅝
2½ x 3 – 10																		
2½ x 3 – 13			30⅛	8⅝	7⅛				9	3	7⅛	139	–	–	12⅛	12⅛	–	–
3 x 4 – 8	4	3	30⅝	6⅝	5⅝		⅜	5⅝	7	3	5⅝	82	11⅝	11 13/16	12 11/16	13 1/16	13⅝	–
3 x 4 – 10			30⅝	7⅛	6⅛	3⅛	⅝	5⅝	7½		5⅝	99	11	11⅝	12⅝	12⅝	–	–
3 x 4 – 13			33¼	9½	8⅛			5	9		7⅛	155	–	–	12⅛	12⅝	–	–
4 x 5 – 8	5	4	34⅝	6⅝	5⅝	4⅛	¾	5⅛	8		5	99	11⅞	12	13	13⅝	13⅝	14⅝
4 x 5 – 10	6		30⅝	8⅝	7⅛			5⅝	8⅝	3⅝	7	135	–	–	13⅝	13⅝	–	–
4 x 5 – 13			32	9⅝	8⅛			5⅝	9	3	7⅛	171	–	–	12⅛	12⅝	13¼	–
6 x 8 – 13 8 x 10 – 13 4 x 6 – 16	See Packed Box Dimension Page. (pumps utilize JP motors). *Ver la página de dimensiones de la caja empacada. (JP motor)*																	

*Denotes NPT connection. All other connections are for use with ANSI class 150 mating flanges. Dimensions in inches, weights in lbs. Do not use for construction purposes.
** Indica conexión NPT. Las demás conexiones deben usarse con bridas de contacto ANSI clase 150. Dimensiones en pulgadas, peso en libras. No utilizar para fines de construcción.*

Motor Dimensions and Weights (may vary with manufacturer)*
Pesos y dimensiones del motor *(pueden variar de acuerdo al fabricante)**

Motor Frame Bastidor del motor	A	AB (Max.)	B	D	E	F	G	H	P* (Max.)	Weight (lbs.) Pesos (libras)
143JM	6½	5½	6	3½	2⅜	2	⅛	3/16	6⅝	41
145JM										57
182JM	8½	5½	6½	4½	3⅜	2¾	3/16	⅜	7¾	77
184JM						2¾				97
213JM	9½	7⅝	8	5¾	4¼	2¾	¼	½	9⅝	122
215JM						3⅝				155
213TCZ						2¾	3/16	⅜	9⅝	122
215TCZ						3⅝				155
254JM	11⅝	9	9⅝	6¾	5	4¾	⅜	½	11⅞	265
256JM						5				320
284JM	12⅝	12⅝	10⅝	7	5½	4⅝	⅜	½	13¾	419
286JM						5½				472
324JM	13⅝	13¾	12	8	6⅝	5¾	3/16	⅝	15⅝	562
326JM						6				588
364TCZ	17⅝	15¾	14½	9	7	5⅝	1	¾	18⅛	775
365TCZ						6¾				1005

Motor Frames and Horsepower
Bastidores del motor y potencia en HP

Frame Size JM *Tamaño del bastidor JM*	ODP	TEFC	RPM
143 JM	1	1	1750
145 JM	1½, 2	1½, 2	
182 JM	3	3	
184 JM	5	5	
213 JM	7½	7½	
215 JM, 215 TCZ	10	10	
254 JM	15	15	
256 JM	20	20	
284 JM	25	25	
286 JM	30	30	
324 JM	40	40	
326 JM	50	50	
143 JM	1½	1½	3500
145 JM	2, 3	2	
182 JM	5	3	
184 JM	7½	5	
213 JM	10	7½	
215 JM	15	10	
215 TCZ	15	–	
254 JM	20	15	
256 JM	25	20	
284 JM	30	25	
286 JM	40	30	
324 JM	50	40	
326 JM	60	50	
364 TCZ	75	60	
365 TCZ	–	75	

Groundwater Extraction Pump Total Discharge Head
Calculations, Tables, and Node Diagram
By
Weston Solutions, Inc.

Total Pumping Head Required

The total pumping head required is found from the total suction lift, the static discharge head, the discharge system friction losses, and losses due to valves and fittings.

Total Suction Lift

Total suction lift is sum of the depth to the static water level (in feet), the drawdown (in feet), and the friction losses in the drop pipe (in feet). For the El Toro SGU-24, it was assumed that the depth to static water level was at 200 feet with drawdown of 5 feet. Friction losses in the drop pipe were calculated using the Hazen-Williams Equation (Equation 1).

Total Suction Lift = Depth to static water level + drawdown + friction losses in drop pipe

Static Discharge Head

The static discharge head is the difference between the elevations at the tank influent point and the elevation at the well head.

Static Discharge Head = Elevation of tank inlet − elevation at well head

Pressure Loss in Pipes Due to Friction

Calculations for pressure loss in the pipe, due to friction, were calculated using the Hazen-Williams equation (Chemtrol 1999):

$$H = 0.002083 \times L \times SG \times (100 \times Q/C)^{1.852} \times (1/d^{4.8665})$$
(Equation 1)

Where:

H = pressure loss, or head loss, due to friction, in feet of water (ft H_2O)
L = pipe length in feet
SG = specific gravity of fluid (water = 1.0).
Q = flow rate in gallons per minute
C = pipe surface roughness constant (for HDPE and PVC C = 150)
d = inside pipe diameter in inches

Equation 1 was used to calculate the pressure losses in the pump drop pipe, the lateral lines, and in the main header pipe line.

Pressure Drop Across Valves

Pressure loss due to valves was calculated using the valve flow coefficient (Cv) and the following formula (Chemtrol 1999):

$$\Delta P = (Q^2 \times SG / Cv^2) \times (2.3 \text{ ft } H_2O/\text{psi}$$
(Equation 2)

Where:

ΔP = Pressure drop across the valve in feet H_2O
Q = flow through valve in gallons per minute
SG = specific gravity of liquid (water = 1.0)
Cv = valve flow coefficient

Fittings

Losses due to fittings in the lateral lines and the main header were found to be insignificant, compared to pipe and valves. Thus, losses due to these fittings were not included in the overall total pumping head calculations.

Total Pumping Head Required

Total pumping head required was calculated by adding the total suction lift, static discharge head, friction losses at the wellhead, discharge system friction losses, and valve/fittings losses:

Total Pumping Head = Total Suction Lift + Static Discharge Head + Discharge System Friction Losses (pipe & valves)

Tables E-1 and E-1.1 provide the pressure head loss calculations for the pipeline. The last column of Table E-1 shows the proposed Grundfos submersible pump to be installed at a particular well. The Segment and Node Diagram shows the nominal OD pipeline size along each segment.

Table E
Total Pumping Head Required (Summary Sheet)

Well ID	GW Extraction Rate (GPM)	Running Total GPM in Main Header	Well Surface Elevation (feet MSL)	Depth to Static Water Level (feet)	Draw-down (feet)	Distcharge Pipe Size (ID for PVC Sch 80) (inches)	Friction Loss in Down Well Pump Discharge Pipe (feet H2O)	Total Suction Lift (feet H2O)	Static Discharge Head (feet H2O)	Friction Losses at Well Heads due to valves etc. (feet H2O)	Pipe ID at Well Head (1 inch PVC Sch 80) (inches)	Friction Losses at Well Heads due to fittings (feet H2O)
24EX03	10	10	286.84	200	5	1.255	4.6	209.6	-43.8	0.66	0.936	2.0
24EX4												
24EX5												
24EX6												
24_SGU-01	10	20	281.52	200	5	1.255	4.6	209.6	-36.5	0.66	0.936	2.0
24_SGU-02	10	30	281.49	200	5	1.255	4.6	209.6	-36.5	0.66	0.936	2.0
24_SGU-03	10	40	280.11	200	5	1.255	4.6	209.6	-35.1	0.66	0.936	2.0
24_SGU-04	10	50	279.62	200	5	1.255	4.6	209.6	-34.6	0.66	0.936	2.0
24_SGU-05	10	60	276	200	5	1.255	4.6	209.6	-31.0	0.66	0.936	2.0
24_SGU-06	10	70	280.79	200	5	1.255	4.6	209.6	-35.8	0.66	0.936	2.0
24_SGU-07	10	80	279.42	200	5	1.255	4.6	209.6	-34.4	0.66	0.936	2.0
24_SGU-08	11	91	276.98	200	5	1.255	5.5	210.5	-32.0	0.80	0.936	2.4
24_SGU-09	11	102	273.63	200	5	1.255	5.5	210.5	-28.6	0.80	0.936	2.4
24_SGU-13	11	113	273.64	200	5	1.255	5.5	210.5	-28.6	0.80	0.936	2.4
24_SGU-10	11	124	276.63	200	5	1.255	5.5	210.5	-31.6	0.80	0.936	2.4
24_SGU-12	11	135	275.39	200	5	1.255	5.5	210.5	-30.4	0.80	0.936	2.4
24_SGU-15	11	146	271.43	200	5	1.255	5.5	210.5	-26.4	0.80	0.936	2.4
24_SGU-11	11	157	279.26	200	5	1.255	5.5	210.5	-34.3	0.80	0.936	2.4
24_SGU-14	11	168	271.27	200	5	1.255	5.5	210.5	-26.3	0.80	0.936	2.4
24_SGU-16	12	180	274.65	200	5	1.255	6.5	211.5	-29.7	0.95	0.936	2.8
24_SGU-17	12	192	271.83	200	5	1.255	6.5	211.5	-26.8	0.95	0.936	2.8
24_SGU-18	12	204	272.06	200	5	1.255	6.5	211.5	-27.1	0.95	0.936	2.8
24_SGU-19	12	216	269.92	200	5	1.255	6.5	211.5	-24.9	0.95	0.936	2.8
24_SGU-21	12	228	267.72	200	5	1.255	6.5	211.5	-22.7	0.95	0.936	2.8
24_SGU-20	12	240	270.98	200	5	1.255	6.5	211.5	-26.0	0.95	0.936	2.8
24_SGU-22	12	252	267.45	200	5	1.255	6.5	211.5	-22.5	0.95	0.936	2.8
24_SGU-23	12	264	267.31	200	5	1.255	6.5	211.5	-22.3	0.95	0.936	2.8
24_SGU-24	12	276	265.36	200	5	1.255	6.5	211.5	-20.4	0.95	0.936	2.8
24_SGU-25	12	288	261.34	200	5	1.255	6.5	211.5	-16.3	0.95	0.936	2.8
24_SGU-26	12	300	253.64	200	5	1.255	6.5	211.5	-10.6	0.95	0.936	2.8
24_SGU-27	12	312	253.6	200	5	1.255	6.5	211.5	-8.6	0.95	0.936	2.8
24_SGU-28	12	324	246.69	200	5	1.255	6.5	211.5	-4.7	0.95	0.936	2.8
24_SGU-29	12	336	244.7	200	5	1.255	6.5	211.5	0.3	0.95	0.936	2.8
24_SGU-30	13	349	238.89	200	5	1.255	7.5	212.5	6.1	1.11	0.936	3.2
24_SGU-35	18	367	232	200	5	1.476	6.2	211.2	13.0	2.13	0.936	5.9
24_SGU-34	18	385	230	200	5	1.476	6.2	211.2	15.0	2.13	0.936	5.9
24_SGU-33	18	403	224	200	5	1.476	6.2	211.2	21.0	2.13	0.936	5.9
24_SGU-32	18	421	221	200	5	1.476	6.2	211.2	24.0	2.13	0.936	5.9
24_SGU-31	18	439	218	200	5	1.476	6.2	211.2	27.0	2.13	0.936	5.9

Well ID	Lateral Line Length From Wellhead to Main Header (feet)	Well Lateral Inside Diameter (inches)	Friction Losses in Lateral Line from Well to Main Line (feet H2O)	Node Name	Total Frictional Losses along Main Header (feet H2O)	Total Friction Losses into E.O Tank	Theoretical Total Pumping Head Required by System	Factor of Safety 25%	Total Pumping Head With Factor of Safety (Feet Water)	Grundfos Pump Model (horsepower)
24EX03	384	1.926	1	Lat_24EX03	143.8	9.1	322	81	403	10S20-27 (2 HP)
24EX4	267	1.926	0	Lat_24EX4						10S20-27 (2 HP)
24EX5	175	1.926	0	Lat_24EX5						10S20-27 (2 HP)
24EX6	142	1.926	0	Lat_24EX6						10S20-27 (2 HP)
24_SGU-01	323	1.926	1	Lat_01-02	138.9	9.1	325	81	406	10S20-27 (2 HP)
24_SGU-02	95	1.926	0.3	Lat_01-02	138.9	9.1	321	80	402	10S20-27 (2 HP)
24_SGU-03	94	1.346	2	Lat_03	132.6	9.1	318	79	397	10S20-27 (2 HP)
24_SGU-04	327	1.346	5	Lin-N-B	130.0	9.1	319	80	399	10S20-27 (2 HP)
24_SGU-05	54	1.346	1	Lin-N-B	130.0	9.1	319	80	398	10S20-27 (2 HP)
24_SGU-06	159	1.346	3	Lin-M-B	121.8	9.1	307	77	384	10S20-27 (2 HP)
24_SGU-07	45	1.346	1	Lin_M-B	121.8	9.1	307	77	384	10S20-27 (2 HP)
24_SGU-08	15	1.346	0.28	Lat_08	119.7	9.1	308	77	385	10S20-27 (2 HP)
24_SGU-09	294	1.346	6	Lat_09	116.4	9.1	313	78	392	10S20-27 (2 HP)
24_SGU-13	149	1.346	3	Lat_13	111.8	9.1	306	76	382	10S20-27 (2 HP)
24_SGU-10	84	1.346	2	Lat_10	110.7	9.1	300	75	375	10S20-27 (2 HP)
24_SGU-12	19	1.346	0.4	Lat_12	110.7	9.1	300	75	375	10S20-27 (2 HP)
24_SGU-15	240	1.346	5		108.4	9.1	306	77	383	10S20-27 (2 HP)
24_SGU-11	115	1.346	2	Lat_11	106.6	9.1	294	74	368	10S20-27 (2 HP)
24_SGU-14	85	1.346	2	Lat_14	100.9	9.1	296	74	370	10S20-27 (2 HP)
24_SGU-16	100	1.346	2	Lat_16	96.4	9.1	292	73	365	10S20-27 (2 HP)
24_SGU-17	14	1.346	0.3	Lat_17	88.2	9.1	282	71	353	10S20-27 (2 HP)
24_SGU-18	43	1.926	0.2	Lat_18	82.6	9.1	277	69	346	10S20-27 (2 HP)
24_SGU-19	37	1.926	0.1	Lat_19	74.2	9.1	270	67	337	10S20-27 (2 HP)
24_SGU-21	145	1.926	0.4	Lat_21	68.7	9.1	267	67	334	10S20-27 (2 HP)
24_SGU-20	104	1.926	0.4	Lat_20	67.3	9.1	262	66	328	10S20-27 (2 HP)
24_SGU-22	13	1.346	0.3	Lat_22	59.2	9.1	258	64	322	10S20-27 (2 HP)
24_SGU-23	13	1.346	0.3	Lat_23	48.9	9.1	247	62	309	10S20-27 (2 HP)
24_SGU-24	14	1.346	0.3	Lat_24	47.1	9.1	248	62	310	10S20-27 (2 HP)
24_SGU-25	15	1.346	0.3	Lat_25	44.0	9.1	249	62	311	10S20-27 (2 HP)
24_SGU-26	37	1.346	1	Lat_26	39.0	9.1	247	62	308	10S15-21 (1.5 HP)
24_SGU-27	32	1.346	1	Lat_27	34.5	9.1	247	62	309	10S15-21 (1.5 HP)
24_SGU-28	16	1.346	0.4	Lat_28	30.5	9.1	247	62	308	10S15-21 (1.5 HP)
24_SGU-29	20	1.346	0.5	Lat_29	26.6	9.1	248	62	310	10S20-18 (2 HP)
24_SGU-30	13	1.346	0.3	Lat_30	21.6	9.1	250	62	312	10S20-18 (2 HP)
24_SGU-35	16	1.541	0.4	Lat_35	17.4	9.1	251	63	314	10S20-18 (2 HP)
24_SGU-34	16	1.541	0.4	Lat_34	13.5	9.1	249	62	312	10S20-18 (2 HP)
24_SGU-33	18	1.541	0.5	Lat_33	7.3	9.1	249	62	311	10S20-18 (2 HP)
24_SGU-32	18	1.541	0.5	Lat_32	2.6	9.1	247	62	309	10S20-18 (2 HP)
24_SGU-31	127	1.541	3	Lin_Q	1.2	9.1	252	63	315	10S20-18 (2 HP)

Table E - . . . (Detail Sheet)
Friction Losses Along Main Line

Well ID	GW Extraction Rate	Node Name	Cummulative Flowrate at Node and Segment	Friction Losses Along Main Header: Friction Losses Segment SVE_03-4	Segment SVE_4-B	Segment B_01-03	Segment B-03-N	Segment B_N-M	Segment B_M-08	Segment B_08-09	Segment B_09-13	Segment B_13-10	Segment B_10-12	Segment B_12-15	Segment B_15-11	Segment B_11-14	Segment B_14-16	Segment B_16-17	Segment B_17-18	Segment B_18-19	Segment B_19-21	Segment B_21-20	Segment B_20-22	Segment B_22-23	Segment B_23-24	Segment B_24-25	Segment B_25-26	Segment B_26-27	Segment B_27-28	Segment B_28-29	Segment B_29-30	Segment B_30-A	Segment A_B-34	Segment A_34-33	Segment A_33-32	Segment A_32-Q	Segment AQ_Tfer	Total Frictional Losses along Main Header (feet H2O)
	(GPM)		(GPM)																																			
24EX03	10	Lat_24EX0	10	0.4	4.5	6.3	2.6	8.2	2.1	3.2	4.7	1.0	2.4	1.6	2.4	3.6	2.4	10.2	5.3	8.7	5.5	1.4	8.1	10.3	1.8	3.1	5.1	4.5	4.0	3.6	5.0	4.5	3.9	6.2	4.7	1.4	1.2	143.8
24EX4		Lat_24EX4	10																																			
24EX5		Lat_24EX5	10																																			
24EX6		Lat_24EX6	10																																			
24_SGU-01	10	Lat_01-02	20			6.3	2.6	8.2	2.1	3.2	4.7	1.0	2.4	1.6	2.4	3.6	2.4	10.2	5.3	8.7	5.5	1.4	8.1	10.3	1.8	3.1	5.1	4.5	4.0	3.6	5.0	4.5	3.9	6.2	4.7	1.4	1.2	138.9
24_SGU-02	10	Lat_01-02	30			6.3	2.6	8.2	2.1	3.2	4.7	1.0	2.4	1.6	2.4	3.6	2.4	10.2	5.3	8.7	5.5	1.4	8.1	10.3	1.8	3.1	5.1	4.5	4.0	3.6	5.0	4.5	3.9	6.2	4.7	1.4	1.2	138.9
24_SGU-03	10	Lat_03	40				2.6	8.2	2.1	3.2	4.7	1.0	2.4	1.6	2.4	3.6	2.4	10.2	5.3	8.7	5.5	1.4	8.1	10.3	1.8	3.1	5.1	4.5	4.0	3.6	5.0	4.5	3.9	6.2	4.7	1.4	1.2	132.6
24_SGU-04	10	Lin-N-B	50					8.2	2.1	3.2	4.7	1.0	2.4	1.6	2.4	3.6	2.4	10.2	5.3	8.7	5.5	1.4	8.1	10.3	1.8	3.1	5.1	4.5	4.0	3.6	5.0	4.5	3.9	6.2	4.7	1.4	1.2	130.0
24_SGU-05	10	Lin-N-B	60					8.2	2.1	3.2	4.7	1.0	2.4	1.6	2.4	3.6	2.4	10.2	5.3	8.7	5.5	1.4	8.1	10.3	1.8	3.1	5.1	4.5	4.0	3.6	5.0	4.5	3.9	6.2	4.7	1.4	1.2	130.0
24_SGU-06	10	Lin-M-B	70						2.1	3.2	4.7	1.0	2.4	1.6	2.4	3.6	2.4	10.2	5.3	8.7	5.5	1.4	8.1	10.3	1.8	3.1	5.1	4.5	4.0	3.6	5.0	4.5	3.9	6.2	4.7	1.4	1.2	121.8
24_SGU-07	10	Lin_M-B	80						2.1	3.2	4.7	1.0	2.4	1.6	2.4	3.6	2.4	10.2	5.3	8.7	5.5	1.4	8.1	10.3	1.8	3.1	5.1	4.5	4.0	3.6	5.0	4.5	3.9	6.2	4.7	1.4	1.2	121.8
24_SGU-08	11	Lat_08	91							3.2	4.7	1.0	2.4	1.6	2.4	3.6	2.4	10.2	5.3	8.7	5.5	1.4	8.1	10.3	1.8	3.1	5.1	4.5	4.0	3.6	5.0	4.5	3.9	6.2	4.7	1.4	1.2	119.7
24_SGU-09	11	Lat_09	102								4.7	1.0	2.4	1.6	2.4	3.6	2.4	10.2	5.3	8.7	5.5	1.4	8.1	10.3	1.8	3.1	5.1	4.5	4.0	3.6	5.0	4.5	3.9	6.2	4.7	1.4	1.2	116.4
24_SGU-13	11	Lat_13	113									1.0	2.4	1.6	2.4	3.6	2.4	10.2	5.3	8.7	5.5	1.4	8.1	10.3	1.8	3.1	5.1	4.5	4.0	3.6	5.0	4.5	3.9	6.2	4.7	1.4	1.2	111.8
24_SGU-10	11	Lat_10	124										2.4	1.6	2.4	3.6	2.4	10.2	5.3	8.7	5.5	1.4	8.1	10.3	1.8	3.1	5.1	4.5	4.0	3.6	5.0	4.5	3.9	6.2	4.7	1.4	1.2	110.7
24_SGU-12	11	Lat_12	135										2.4	1.6	2.4	3.6	2.4	10.2	5.3	8.7	5.5	1.4	8.1	10.3	1.8	3.1	5.1	4.5	4.0	3.6	5.0	4.5	3.9	6.2	4.7	1.4	1.2	110.7
24_SGU-15	11		146											1.6	2.4	3.6	2.4	10.2	5.3	8.7	5.5	1.4	8.1	10.3	1.8	3.1	5.1	4.5	4.0	3.6	5.0	4.5	3.9	6.2	4.7	1.4	1.2	108.4
24_SGU-11	11	Lat_11	157												2.4	3.6	2.4	10.2	5.3	8.7	5.5	1.4	8.1	10.3	1.8	3.1	5.1	4.5	4.0	3.6	5.0	4.5	3.9	6.2	4.7	1.4	1.2	106.8
24_SGU-14	11	Lat_14	168														2.4	10.2	5.3	8.7	5.5	1.4	8.1	10.3	1.8	3.1	5.1	4.5	4.0	3.6	5.0	4.5	3.9	6.2	4.7	1.4	1.2	100.9
24_SGU-16	12	Lat_16	180															10.2	5.3	8.7	5.5	1.4	8.1	10.3	1.8	3.1	5.1	4.5	4.0	3.6	5.0	4.5	3.9	6.2	4.7	1.4	1.2	98.4
24_SGU-17	12	Lat_17	192																5.3	8.7	5.5	1.4	8.1	10.3	1.8	3.1	5.1	4.5	4.0	3.6	5.0	4.5	3.9	6.2	4.7	1.4	1.2	88.2
24_SGU-18	12	Lat_18	204																	8.7	5.5	1.4	8.1	10.3	1.8	3.1	5.1	4.5	4.0	3.6	5.0	4.5	3.9	6.2	4.7	1.4	1.2	82.9
24_SGU-19	12	Lat_19	216																		5.5	1.4	8.1	10.3	1.8	3.1	5.1	4.5	4.0	3.6	5.0	4.5	3.9	6.2	4.7	1.4	1.2	74.2
24_SGU-21	12	Lat_21	228																			1.4	8.1	10.3	1.8	3.1	5.1	4.5	4.0	3.6	5.0	4.5	3.9	6.2	4.7	1.4	1.2	68.7
24_SGU-20	12	Lat_20	240																				8.1	10.3	1.8	3.1	5.1	4.5	4.0	3.6	5.0	4.5	3.9	6.2	4.7	1.4	1.2	67.3
24_SGU-22	12	Lat_22	252																					10.3	1.8	3.1	5.1	4.5	4.0	3.6	5.0	4.5	3.9	6.2	4.7	1.4	1.2	59.2
24_SGU-23	12	Lat_23	264																						1.8	3.1	5.1	4.5	4.0	3.6	5.0	4.5	3.9	6.2	4.7	1.4	1.2	48.9
24_SGU-24	12	Lat_24	276																							3.1	5.1	4.5	4.0	3.6	5.0	4.5	3.9	6.2	4.7	1.4	1.2	47.1
24_SGU-25	12	Lat_25	288																								5.1	4.5	4.0	3.6	5.0	4.5	3.9	6.2	4.7	1.4	1.2	44.0
24_SGU-26	12	Lat_26	300																									4.5	4.0	3.6	5.0	4.5	3.9	6.2	4.7	1.4	1.2	39.0
24_SGU-27	12	Lat_27	312																										4.0	3.6	5.0	4.5	3.9	6.2	4.7	1.4	1.2	34.5
24_SGU-28	12	Lat_28	324																											3.6	5.0	4.5	3.9	6.2	4.7	1.4	1.2	30.5
24_SGU-29	12	Lat_29	336																												5.0	4.5	3.9	6.2	4.7	1.4	1.2	26.8
24_SGU-30	13	Lat_30	349																													4.5	3.9	6.2	4.7	1.4	1.2	21.8
24_SGU-35	18	Lat_35	367																														3.9	6.2	4.7	1.4	1.2	17.4
24_SGU-34	18	Lat_34	385																															6.2	4.7	1.4	1.2	13.5
24_SGU-33	18	Lat_33	403																																4.7	1.4	1.2	7.3
24_SGU-32	18	Lat_32	421																																	1.4	1.2	2.6
24_SGU-31	18	Lin_Q	439																																		1.2	1.2

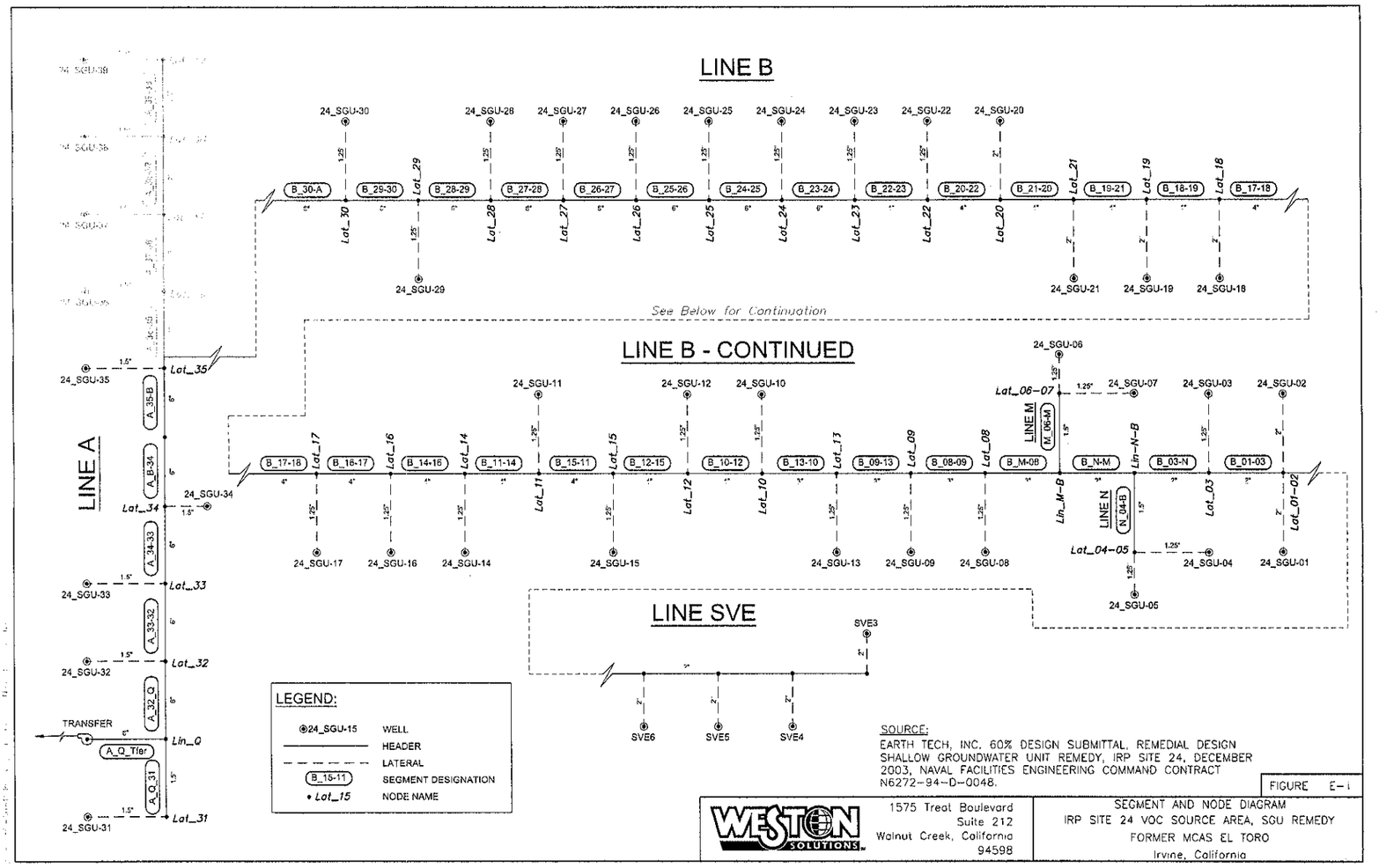

SOURCE:
EARTH TECH, INC. 60% DESIGN SUBMITTAL, REMEDIAL DESIGN SHALLOW GROUNDWATER UNIT REMEDY, IRP SITE 24, DECEMBER 2003, NAVAL FACILITIES ENGINEERING COMMAND CONTRACT N6272-94-D-0048.

FIGURE E-1

WESTON SOLUTIONS

1575 Treat Boulevard
Suite 212
Walnut Creek, California
94598

SEGMENT AND NODE DIAGRAM
IRP SITE 24 VOC SOURCE AREA, SGU REMEDY
FORMER MCAS EL TORO
Irvine, California

APPENDIX F

Design Specifications

Specification Section Index

Shallow Groundwater Unit Remedial Action
Installation Restoration Program Site 24
Volatile Organic Compounds Source Area
Former Marine Corps Air Station
El Toro, California

December 2004

DIVISION 01 - GENERAL REQUIREMENTS

01110 Summary of Work
01310 Administrative Requirements
01330 Submittal Procedures
01355 Environmental Protection
01450 Construction Quality Control
01525 Safety and Occupational Health Requirements
01770 Closeout Procedures
01781 Operation and Maintenance Manual

DIVISION 02 - SITE WORK

02120 Transportation and Disposal of Remediation Derived Wastes
02222 Excavation, Trenching, and Backfill
02525 Well Construction
02821 Chain Link Fence and Gates

DIVISION 03 - CONCRETE

03300 Cast In Place Concrete

DIVISION 11 - EQUIPMENT

11211 Centrifugal Transfer Pumps
11212 Grundfos Submersible Extraction Well Pumps and Motors
11246 High-Density Crosslinked Polyethylene Tanks

DIVISION 15 - MECHANICAL

15050 Hydrostatic Testing of Pipe and Manifold
15051 Valves, Fittings, Flanges, and Instruments for Vaults
15064 PVC Pipe, Fittings, Flanges for Compound
15065 HDPE Pipe, Fittings, and Flanges
15101 Granulated Activated Carbon Vessel

DIVISION 16 - ELECTRICAL

16010 General Electrical Requirements
16050 Basic Electrical Materials and Methods
16400 Service and Distribution

DIVISION 17 - CONTROLS

1734 Allen Bradley Control Logix Remote PLC
1756 Allen Bradley Control Logix Host PLC

SECTION 01110

SUMMARY OF WORK

PART 1 GENERAL

1.1 SUBMITTALS

The following shall be submitted to the Contracting Officer in accordance with Section 01330, "Submittal Procedures".

1.1.1 Pre-construction Submittals

Pre-construction submittals shall include the following:

(1) Remedial Action Work Plan (RAWP), which shall include the following:
  (a) Schedule, which shall be a time-scaled diagram displaying project activities that comply with the contract requirements.
  (b) Traffic Control Plan
  (c) Erosion, Sediment, and Stormwater Control in general accordance with State Water Resources Control Board Order No. 99-08-DWQ, NPDES General Permit No. CAS 000002.
  (d) Waste Management Plan
  (e) Sampling and Analysis Plan (SAP), as an Appendix to the RAWP
  (f) Site Health and Safety Plan (HSAP), as an Appendix to the RAWP
(2) Construction Quality Control (CQC) Plan, as an Appendix to the Design Submittal.
(3) Operation and Maintenance (O&M) Manual

1.1.2 Administrative Submittals

Administrative submittals shall include the following:

(1) Monthly Cost Reports
(2) Project Meeting Minutes
(2) QC submittals as outlined in the CQC Plan.

1.1.3 Closeout Submittals

Closeout submittals shall include the following:

(1) As-Built Drawings
(2) Completion Inspections as outlined in the CQC Plan.

1.2 WORK COVERED BY CONTRACT DOCUMENTS

1.2.1 Project Description
It is the declared and acknowledged intention and meaning to provide and secure for completion of a Remedial Action. The Remedial Action involves extraction of groundwater using extraction wells and pumps, and the conveyance of groundwater from extraction wells to the Irvine Ranch Water District's point of connection located at the southwest corner of the former El Toro Marine Corps Air Station (MCAS). The work includes furnishing all labor, materials, and equipment to perform the following:

(1) Mobilizing and setting up environmental controls at the site;

(2) Verifying the location and status of subsurface utilities that may be impacted by construction activities;
(3) Providing temporary safety fencing for laydown area;
(4) Establishing erosion control measures that will remain in place throughout the duration of construction activities;
(5) Installing shallow groundwater unit (SGU) extraction wells;
(6) Installing well heads and concrete well vaults;
(7) Installing well pumps and associated equipment and instrumentation;
(8) Excavating trenches from the extraction wells to the transfer compound;
(9) Installing conveyance piping and electrical conduits inside the trenches;
(10) Installing and wiring electrical control panels;
(11) Constructing a concrete, secondary containment pad to support process equipment at transfer compound;
(12) Installing an equalization tank, transfer pumps, and associated piping;
(13) Constructing a control building to house electrical equipment and office;
(14) Installing fencing and gates around transfer compound;
(15) Demobilizing, including final site clean-up;
(16) Performing incidental related work.

1.2.2 Location

The work shall be located at the Installation Restoration Program (IRP) Site 24, Volatile Organic Compounds Source Area, Former El Toro MCAS, located in Orange County, California, as shown in the Project Drawings.

1.3 LOCATION OF UNDERGROUND FACILITIES

Obtain digging permits prior to start of excavation by contacting the Contracting Officer 15 calendar days in advance. Scan the construction site with electromagnetic or sonic equipment, and mark the surface of the ground, or paved surface where existing underground utilities are discovered.

1.3.1 Notification Prior to Excavation

Notify the Contracting Officer at least 48 hours prior to starting excavation work.

1.4 PROJECT SCHEDULE, PHASING, AND TIME CONSTRAINTS

1.4.1 Commencement, Prosecution, and Completion of Work

The Contractor shall submit to the Contracting Officer all required preconstruction submittals, test reports, certificates and closeout submittals as defined under paragraphs above. Following acceptance of the submittals by the Contracting Officer, the Contractor shall be required to (a) commence work under this contract after the date the Contractor receives the notice to proceed, (b) prosecute the work diligently, and (c) complete the work in accordance with the project schedule in the approved RAWP.

1.4.2 Construction Schedule

The overall project schedule shall be within the number of work days stated in the following schedule.

Schedule Start Day: Five working days after final approval of pre-construction submittals.

Completion Day: Construction work shall be completed in accordance with the accepted project schedule.

PART 2 PRODUCTS

Not used.

PART 3 EXECUTION

3.1 FACILITIES AND SERVICES

3.1.1 Availability of Utilities Services

The Contractor shall provide his own construction utilities unless otherwise coordinated and approved by the Contracting Officer.

The Contractor shall make temporary construction connections to electricity as necessary for completion of work.

The Contractor shall mobilize and maintain potable bottled drinking water and temporary sanitary facilities for the field crew; the Contractor shall remove the sanitary facilities from the site at the conclusion of construction activities.

3.1.2 Contractor's Storage Area

Storage Size and Location: During the course of field activities, the Contractor shall be allowed to store equipment adjacent to the site in a location to be determined by the Contracting Officer. The Contractor shall be responsible for securing the storage area from unauthorized access. If requested by the Contractor, additional storage area may be available, the exact location of which will be determined by the Contracting Officer.

3.2 RESTRICTIONS ON OPERATIONS

3.2.1 Work Outside Regular Hours

If the Contractor desires to carry on work outside regular hours (7:30 am to 4:30 pm Monday through Friday), including Saturdays, Sundays, and Government holidays, an application shall be delivered to the Contracting Officer. The Contractor shall allow ample time to enable satisfactory arrangements to be made by the Government to inspect the work in progress. If work is to be conducted during periods of darkness, the different parts of the work shall be lighted in a manner approved by the Contracting Officer.

3.2.2 Security Requirements

The Contractor shall erect temporary security equipment consisting, at a minimum, of fencing, barriers, and signs to prevent unauthorized access to construction area. This equipment shall be erected prior to commencement of work at the site. Fencing and other barriers shall remain in place until construction activities are concluded; all temporary fencing shall be removed during demobilization.

3.2.3 Existing Conditions and Extra Obligations of the Contractor

Contracting Officer approval is required prior to restricting use of any roads during construction. The Contracting Officer shall be notified a minimum of 15 calendar days prior to road closure. The Contractor shall ensure that the road shall be safe, clear, and free from mud or debris at the end of each day. Requirements for traffic control in the event construction disrupts normal traffic patterns shall be incorporated into the RAWP that shall be prepared by the Contractor according to the requirements of the basic contract.

3.2.4 Historical and Archaeological Resources

While items of possible historical or archaeological interest are not expected in or around the site, the Contractor shall carefully preserve and report immediately to the Contracting Officer items of possible historic or archaeological interest that are discovered in the course of work.

3.3 LOCATION OF UNDERGROUND FACILITIES

To the extent practical, the Contractor shall field-verify the elevations indicated or specified on government provided drawings and maps, including underground piping, utilities, and obstructions.

3.4 PERMIT EQUIVALENCY PACKAGE

The Contractor shall submit a permit-equivalency package to the Contracting Officer.

3.5 FUGITIVE DUST EMISSIONS

The Contractor shall monitor construction and shall provide dust controls as necessary.

3.6 STORM PROTECTION

The Contractor shall take precautions to minimize any danger to persons and protect the work and any nearby Government property during periods of high winds and/or precipitation. Protective measures will be implemented in accordance with the accepted ECP.

3.7 LOOSE DEBRIS

The Contractor shall prevent loose debris, including but not limited to refuse, vegetation, and dust from entering properties adjacent to the site.

3.8 DAILY SITE CLEANUP

The Contractor shall ensure that the construction site is secured at the end of each workday. All equipment and materials shall be stored in the Contractor's storage area or within the project construction area. Loose debris, trash, or project soil shall not be present outside of the Contractor's storage or work areas at the end of each working day.

-- End of Section --

SECTION 01310

ADMINISTRATIVE REQUIREMENTS

PART 1 GENERAL

The specifications shall be consistent with the design/build contract.

1.1 SUBMITTALS

The following will be submitted in accordance with Section 01330 SUBMITTAL PROCEDURES

SD-01 Pre-construction Submittals

Emergency Contact Personnel List, to be included in the Site Health and Safety Plan (HASP). The Emergency Contact Personnel List shall include the contacts name, title, company or agency name, office phone number, and cell phone numbers.

1.2 SUPERVISION

At least one qualified supervisor for the contractor and subcontractors shall be capable of reading, writing, and conversing fluently in the English language will be at the job site during working hours. In addition Quality Control representatives will be fluent in English communication skills.

1.3 AVAILABILITY OF CADD FILES

After award and upon request, the electronic "Computer-Aided Drafting and Design (CADD)" drawing files will be made available to the contractor for use in preparation of construction drawings and data related to the referenced contract subject to the following terms and conditions.

Data contained on these electronic files shall not be used for any purpose other than as a convenience in the preparation of construction data for the referenced project. Any other use or reuse shall be at the sole risk of the Contractor and without liability or legal exposure to the Government. The Contractor shall make no claim and waives to the fullest extent permitted by law, any claim or cause of action of any nature against the Government, its agents or sub consultants that may arise out of or in connection with the use of these electronic files. The Contractor shall, to the fullest extent permitted by law, indemnify and hold the Government harmless against all damages, liabilities or costs, including reasonable attorney's fees and defense costs, arising out of or resulting from the use of these electronic files.

These electronic CADD drawing files are not construction documents. Differences may exist between the CADD files and the corresponding construction documents. The Government makes no representation regarding the accuracy or completeness of the electronic CADD files, nor does it make representation to the compatibility of these files with the Contractors hardware or software. In the event that a conflict arises between the signed and sealed construction documents prepared by the Government and the furnished CADD files, the signed and sealed construction documents shall govern. The Contractor is responsible for determining if any conflict exists. Use of these CADD files does not relieve the Contractor of duty to fully comply with the contract documents, including and without limitation, the need to check, confirm and coordinate the work of all contractors for the project.

1.4 ELECTRONIC MAIL (E-MAIL) ADDRESS

The Contractor shall establish and maintain electronic mail (e-mail) capability along with the capability to open various electronic attachments in Microsoft, Adobe Acrobat, and other similar formats. After contract award, the Contractor shall provide the Contracting Officer a single (only one) e-mail address for electronic communications from the Contracting Officer related to this contract including, but not limited to contract documents, invoice information, request for proposals, and other correspondence. The Contracting Officer may also use email to notify the Contractor of base access conditions when emergency conditions warrant, such as hurricanes, terrorist threats, etc. Multiple email address are discouraged.

It is the Contractor's responsibility to make timely distribution of all Contracting Officer initiated e-mail with its own organization including field office(s). The Contractor shall promptly notify the Contracting Officer, in writing, of any changes to this email address.

PART 2 PRODUCTS

Not used.

PART 3 EXECUTION

Not used.

-- End of Section --

SECTION 01330

SUBMITTAL PROCEDURE

PART 1 GENERAL

The specifications shall be consistent with the design/build contract. Submittal register will not be provided by the Government.

1.1 DEFINITIONS

1.1.1 Submittals

Shop drawings, product data, samples, operation and maintenance data, and administrative submittals presented for review and approval.

1.1.2 Types of Submittals

Submittals are grouped as follows:

Shop drawings: Drawings, schedules, diagrams, and other data prepared specifically for this contract, by contractor or through contractor by way of subcontractor, manufacturer, supplier, distributor, or other lower tier contractor, to illustrate portion of work.

Product data: Preprinted material such as illustrations, standard schedules, performance charts, instructions, brochures, diagrams, manufacturer's descriptive literature, catalog data, and other data to illustrate portion of work, but not prepared exclusively for this contract.

Samples: Physical examples of products, materials, equipment, assemblies, or workmanship that are physically identical to portion of work, illustrating portion of work or establishing standards for evaluating appearance of finished work or both.

Operation and Maintenance (O&M) Data:
Data that is furnished by the manufacturer, or the system provider, to the equipment operating and maintenance personnel. This data is needed by operating and maintenance personnel for the safe and efficient operation, maintenance and repair of the item. The data is required when the item is delivered to the project site.

Administrative submittals: Data presented for reviews and approval to ensure that administrative requirements of project are adequately met but not to ensure directly that work is in accordance with design concept and in compliance with contract documents.

1.2 EXAMPLE SUBMITTAL IDENTIFICATION (SD)

SD-01 Preconstruction Submittals

Certificates of insurance.
Surety bonds.
List of proposed subcontractors.
List of proposed products.
Construction Progress Schedule.
Submittal register.
Schedule of values.
Remedial Action Work Plan (RAWP).
Construction Quality Control Plan (included in the RAWP).
Erosion, Sediment and Stormwater Control (included in RAWP).

Site Health and Safety Plan (appendix in RAWP).

SD-02 As-Built Drawings

Drawings, diagrams, and schedules specifically prepared to illustrate some portion of the work.

Diagrams and instructions from a manufacturer or fabricator for use in producing the product and as aids to the contractor for integrating the product or system into the project.

Drawings prepared by or for the contractor to show how multiple systems and interdisciplinary work will be coordinated.

SD-03 Product Data

Catalog cuts, illustrations, schedules, diagrams, performance charts, instructions and brochures illustrating size, physical appearance and other characteristics of materials or equipment for some portion of the work.

Samples of warranty language when the contract requires extended product warranties.

SD-04 Samples

Physical examples of materials, equipment or workmanship that illustrate functional and aesthetic characteristics of a material or product and establish standards by which the work can be judged.

Color samples from the manufacturer's standard line (or custom color samples if specified) to be used in selecting or approving colors for the project.

Field samples and mock-ups constructed on the project site establish standards by which the ensuring work can be judged. Includes assemblies or portions of assemblies which are to be incorporated into the project and those which will be removed at conclusion of the work.

SD-05 Design Data

Calculations, mix designs, analyses or other data pertaining to a part of work.

SD-06 Test Reports

Report signed by authorized official of testing laboratory that a material, product or system identical to the material, product or system to be provided has been tested in accordance with specified requirements.

Report which includes findings of a test required to be performed by the contractor on an actual portion of the work or prototype prepared for the project before shipment to job site.

Report which includes finding of a test made at the job site or on sample taken from the job site, on portion of work during or after installation.

Investigation reports

Daily checklists

Final acceptance test and operational test procedure

SD-07 Certificates

Statements signed by responsible officials of manufacturer of product, system or material attesting that product, system or material meets specification requirements. Must be dated after award of project contract and clearly name the project.

Document required of contractor, or of a supplier, installer or subcontractor through contractor, the purpose of which is to further quality of orderly progression of a portion of the work by documenting procedures, acceptability of methods or personnel qualifications.

Confined space entry permits.

SD-08 Manufacturer's Instructions

Preprinted material describing installation of a product, system or material, including special notices and Material Safety Data sheets concerning impedances, hazards and safety precautions.

SD-09 Manufacturer's Field Reports

Documentation of the testing and verification actions taken by manufacturer's representative to confirm compliance with manufacturer's standards or instructions.

Factory test reports.

SD-10 Operation and Maintenance Data

Data that is furnished by the manufacturer, or the system provider, to the equipment operating and maintenance personnel. This data is needed by operating and maintenance personnel for the safe and efficient operation, maintenance and repair of the item.

SD-11 Closeout Submittals

Documentation to record compliance with technical or administrative requirements or to establish an administrative mechanism.

1.2.1 Approving Authority

Person authorized to approve submittal.

1.2.2 Work

As used in this section, on- and off-site construction required by contract documents, including labor necessary to produce submittals, construction, materials, products, equipment, and systems incorporated or to be incorporated in such construction.

1.3 SUBMITTALS

Submit the following in accordance with the requirements of this section.

SD-01 Preconstruction Submittals

Submittal register; G

GOVERNMENT APPROVED SUBMITTALS

The Contracting Officer's approval of submittals shall not be construed as a complete check, but will indicate only that the general method of construction, materials, detailing and other information are satisfactory. Approval will not relieve the contractor of the responsibility for any error which may exist, as the contractor under the CQC requirements of this contract, is responsible for the dimensions, the design of adequate connections and details, and the satisfactory construction of all work. After submittals have been approved by the Contracting Officer, no resubmittal for the purpose of substituting materials or equipment will be given consideration unless accompanied by an explanation of why a substitution is necessary.

1.4 USE OF SUBMITTAL REGISTER

Prepare and maintain submittal register, as the work progresses. Use electronic submittal register.

1.4.1 Submittal Register

Submit submittal register with the Quality Control Plan and project schedule required by Section 01450, "Quality Control".

1.4.2 Contractor Use of Submittal Register

Update the following fields:

Column (b) Transmittal Number: contractor assigned list of consecutive numbers.

Column (j) Action Code (k): Date of action used to record contractor's review when forwarding submittals to QC.

Column (l) List date of submittal transmission.

Column (q) List date approval received.

1.4.3 Approving Authority Use of Submittal Register

Update the following fields:

Column (b).

Column (l) List date of submittal receipt.

Column (m) through (p).

Column (q) List date returned to contractor.

1.4.4 Contractor Action Code

Entries used will be as follows:

NR - Not Received

AN - Approved as noted

A - Approved

RR - Disapproved, Revise, and Resubmit

1.5 PROCEDURES FOR SUBMITTALS

1.5.1 Reviewing, Certifying, Approving Authority

The QC organization shall be responsible for reviewing and certifying that submittals are in compliance with contract requirements. Approving authority on submittals is QC manager unless otherwise specified for specific submittal. At each "Submittal" paragraph in individual specification sections, a notation "G," following a submittal item, indicates contracting officer is approving authority for that submittal item.

1.5.2 Constraints

Submittals listed or specified in this contract shall conform to provisions of this section, unless explicitly stated otherwise.

Submittals shall be complete for each definable feature of work; components of definable feature interrelated as a system shall be submitted at same time.

When acceptability of a submittal is dependent on conditions, items, or materials included in separate subsequent submittals, submittal will be returned without review.

Approval of a separate material, product, or component does not imply approval of assembly in which item functions.

1.5.3 Scheduling

Coordinate scheduling, sequencing, preparing and processing of submittals with performance of work so that work will not be delayed by submittal processing. Allow for potential requirements to resubmit.

Except as specified otherwise, allow review period, beginning with receipt by approving authority, that includes at least 15 working days for submittals for QC Manager approval and 20 working days for submittals for contracting officer approval. Period of review for submittals with contracting officer approval begins when Government receives submittal from QC organization. Period of review for each resubmittal is the same as for initial submittal.

1.5.4 Variations

Variations from contract requirements require Government approval pursuant to contract and will be considered where advantageous to government.

1.5.4.1 Considering Variations

Discussion with contracting officer prior to submission, will help ensure functional and quality requirements are met and minimize rejections and resubmittals. When contemplating a variation which results in lower cost, consider submission of the variation as a Value Engineering Change Proposal.

1.5.4.2 Proposing Variations

When proposing variation, deliver written request to the contracting officer, with documentation of the nature and features of the variation and why the variation is desirable and beneficial to government. If lower cost is a benefit, also include an estimate of the cost saving. In addition to documentation required for variation, include the submittals required for the item. Clearly mark the proposed variation in all documentation.

1.5.4.3 Warranting That Variations Are Compatible

When delivering a variation for approval, contractor warrants that this contract has been reviewed to establish that the variation, if incorporated, will be compatible with other elements of work.

1.5.4.4 Review Schedule Is Modified

In addition to normal submittal review period, a period of 10 working days will be allowed for consideration by the Government of submittals with variations.

1.5.5 Contractor's Responsibilities

Determine and verify field measurements, materials, field construction criteria; review each submittal; and check and coordinate each submittal with requirements of the work and contract documents.

Transmit submittals to QC organization in accordance with schedule.

Advise contracting officer of variation.

Correct and resubmit submittal as directed by approving authority. When resubmitting disapproved transmittals or transmittals noted for resubmittal, the contractor shall provide copy of that previously submitted transmittal including all reviewer comments for use by approving authority. Direct specific attention in writing or on resubmitted submittal, to revisions not requested by approving authority on previous submissions.

Furnish additional copies of submittal when requested by contracting officer, to a limit of 1 copy per submittal.

Complete work which must be accomplished as basis of a submittal in time to allow submittal to occur as scheduled.

Ensure no work has begun until submittals for that work have been returned as "approved," or "approved as noted", except to the extent that a portion of work must be accomplished as basis of submittal.

1.5.6 QC Organization Responsibilities

Note date on which submittal was received from contractor on each submittal.

Review each submittal; and check and coordinate each submittal with requirements of work and contract documents.

Review submittals for conformance with project design concepts and compliance with contract documents.

Act on submittals, determining appropriate action based on QC organization's review of submittal.

(1) When QC manager is approving authority, take appropriate action on submittal from the possible actions defined in paragraph entitled, "Actions Possible."
(2) When contracting officer is approving authority or when variation has been proposed, forward submittal to Government with certifying statement or return submittal marked "not reviewed" or "revise and resubmit" as appropriate. The QC organization's review of submittal determines appropriate action.

Ensure that material is clearly legible.

Stamp each sheet of each submittal with QC certifying statement or approving statement, except that data submitted in bound volume or on one sheet printed on two sides may be stamped on the front of the first sheet only.

1. When approving authority is contracting officer, QC organization will certify submittals forwarded to contracting officer with the following certifying statement:

   "I hereby certify that the (equipment) (material) (article) shown and marked in this submittal is that proposed to be incorporated with contract Number N68711-01-D-6010, Task Order 0004, is in compliance with the contract drawings and specification, can be installed in the allocated spaces, and is submitted for Government approval.

Certified by Submittal Reviewer _____, Date _____
(Signature when applicable)

Certified by QC Manager _____, Date _____"
(Signature)

2. When approving authority is QC Manager, QC Manager will use the following approval statement when returning submittals to contractor as "Approved" or "Approved as Noted."

   "I hereby certify that the (material) (equipment) (article) shown and marked in this submittal and proposed to be incorporated with contract Number N68711-01-D-6010, Task Order 0004, is in compliance with the contract drawings and specification, can be installed in the allocated spaces, and is submitted for Navy approval.

Certified by Submittal Reviewer _____, Date _____
(Signature when applicable)

Approved by QC Manager _____, Date _____"
(Signature)

Sign certifying statement or approval statement. The person signing certifying statements shall be QC organization member designated in the approved QC plan. The signatures shall be in original ink. Stamped signatures are not acceptable.

Update submittal register as submittal actions occur and maintain the submittal register at project site until final acceptance of all work by contracting officer.

Retain a copy of approved submittals at project site, including contractor's copy of approved samples.

1.5.7 Government's Responsibilities

When approving authority is Contracting Officer, the Government will:

Note date on which submittal was received from QC manager, on each submittal for which the contracting officer is approving authority.

Review submittals for approval within scheduling period specified and only for conformance with project design concepts and compliance with contract documents.

Identify returned submittals with one of the actions defined in paragraph entitled "Actions Possible" and with markings appropriate for action indicated.

1.5.8 Actions Possible

Submittals will be returned with one of the following notations:

Submittals marked "not reviewed" will indicate submittal has been previously reviewed and approved, is not required , does not have evidence of being reviewed and approved by contractor, or is not complete. A submittal marked "not reviewed" will be returned with an explanation of the reason it is not reviewed. Resubmit submittals returned for lack of review by contractor or for being incomplete, with appropriate action, coordination, or change.

Submittals marked "approved" "approved as submitted" authorize contractor to proceed with work covered.

Submittals marked "approved as noted" or "approval except as noted; resubmission not required" authorize contractor to proceed with work as noted provided contractor takes no exception to the notations.

Submittals marked "revise and resubmit" or "disapproved" indicate submittal is incomplete or does not comply with design concept or requirements of the contract documents and shall be resubmitted with appropriate changes. No work shall proceed for this item until resubmittal is approved.

1.6 FORMAT OF SUBMITTALS

1.6.1 Transmittal Form

Transmit each submittal, except sample installations and sample panels, to office of approving authority. Transmit submittals with transmittal form prescribed by Contracting Officer and standard for project. The transmittal form shall identify contractor, indicate date of submittal, and include information prescribed by transmittal form and required in paragraph entitled "Identifying Submittals." Process transmittal forms to record actions regarding sample panels and sample installations.

1.6.2 Identifying Submittals

Identify submittals, except sample panel and sample installation, with the following information permanently adhered to or noted on each separate component of each submittal and noted on transmittal form. Mark each copy of each submittal identically, with the following:

Project title and location.

Construction contract number.

Section number of the specification section by which submittal is required.

Submittal description (SD) number of each component of submittal.

When a resubmission, add alphabetic suffix on submittal description, for example, SD-10A, to indicate resubmission.

Name, address, and telephone number of subcontractor, supplier, manufacturer and any other second tier contractor associated with submittal.

Product identification and location in project.

1.6.3 Format for Shop Drawings

Shop drawings shall not be less than 8-1/2 by 11 inches nor more than 30 by 42 inches. Present 8-1/2 by 11 inches sized shop drawings. Present larger drawings in sets as necessary.

Include on each drawing the drawing title, number, date, and revision numbers and dates, in addition to information required in paragraph entitled "Identifying Submittals."

Dimension drawings, except diagrams and schematic drawings; prepare drawings demonstrating interface with other trades to scale. Shop drawing dimensions shall be the same unit of measure as indicated on the contract drawings. Identify materials and products for work shown.

1.6.4 Format of Product Data

Present product data submittals for each section as a complete set. Include table of contents, listing page and catalog item numbers for product data.

Indicate, by prominent notation, each product which is being submitted; indicate specification section number and paragraph number to which it pertains.

Supplement product data with material prepared for project to satisfy submittal requirements for which product data does not exist. Identify this material as developed specifically for project.

1.6.5 Format of Samples

Furnish samples in sizes below, unless otherwise specified or unless the manufacturer has prepackaged samples of approximately same size as specified:

(1) Sample of Equipment or Device: Full size.
(2) Sample of Materials Less Than 2 by 3 inches: Built up to 8 1/2 by 11 inches.
(3) Sample of Materials Exceeding 8 1/2 by 11 inches: Cut down to 8 1/2 by 11 inches and adequate to indicate color, texture, and material variations.
(4) Sample of Linear Devices or Materials: 10 inch length or length to be supplied, if less than 10 inches. Examples of linear devices or materials are conduit and handrails.
(5) Sample of Non-Solid Materials: Pint. Examples of non-solid materials are sand and paint.
(6) Color Selection Samples: 2 by 4 inches.
(7) Sample Panel: 4 by 4 feet.
(8) Sample Installation: 100 square feet.

Samples Showing Range of Variation: Where variations are unavoidable due to nature of the materials, submit sets of samples of not less than three units showing extremes and middle of range.

Reusable Samples: Incorporate returned samples into work only if so specified or indicated. Incorporated samples shall be in undamaged condition at time of use.

Recording of Sample Installation: Note and preserve the notation of area constituting sample installation but remove notation at final clean up of project.

When color, texture or pattern is specified by naming a particular manufacturer and style, include one sample of that manufacturer and style, for comparison.

1.7 QUANTITY OF SUBMITTALS

1.7.1 Number of Copies of Shop Drawings

Submit two copies of submittals of shop drawings requiring review and approval only by QC organization and seven copies of shop drawings requiring review and approval by Contracting Officer.

1.7.2 Number of Copies of Product Data

Submit two copies of product data submittals.

1.7.3 Number of Samples

Submit two samples.

1.7.4 Number of Copies of Operation and Maintenance Data

Submit two copies of O&M Data to the Contracting Officer for review and approval.

1.7.5 Number of Copies of Administrative Submittals

Submit two copies of Administrative Submittals.

PART 2 PRODUCTS

Not used.

PART 3 EXECUTION

Not used.

-- End of Section --

SECTION 01355

ENVIRONMENTAL PROTECTION

PART 1 GENERAL

The specifications will be consistent with the design/build contract.

1.1 REFERENCES

The publications listed below form a part of this specification to the extent referenced. The publications are referred to in the text by basic designation only.

U.S. NATIONAL ARCHIVES AND RECORDS ADMINISTRATION (NARA)

33 CFR 228	Clean Water Act
40 CFR 260	Hazardous Waste Management System: General
40 CFR 261	Identification and Listing of Hazardous Waste
40 CFR 262	Standards Applicable to Generators of Hazardous Waste
40 CFR 279	Standards for the Management of Used Oil
40 CFR 302	Designation, Reportable Quantities, and Notification
40 CFR 355	Emergency Planning and Notification
49 CFR 171 - 178	Hazardous Materials Regulations

U.S. ARMY CORPS OF ENGINEERS (USACE)

EM 385-1-1	Safety and Health Requirements Manual

1.2 DEFINITIONS

1.2.1 Environmental Pollution and Damage

Environmental pollution and damage is the presence of chemical, physical, or biological elements or agents which adversely affect human health or welfare; unfavorably alter ecological balances of importance to human life; affect other species of importance to humankind; or degrade the environment aesthetically, culturally and/or historically.

1.2.2 Environmental Protection

Environmental protection is the prevention/control of pollution and habitat disruption that may occur to the environment during construction. The control of environmental pollution and damage requires consideration of land, water, and air; biological and cultural resources; and includes management of visual aesthetics; noise; solid, chemical, gaseous, and liquid waste; radiant energy; radioactive material; and other pollutants.

1.2.3 Contractor-Generated Hazardous Waste

Contractor-generated hazardous waste means materials that, if abandoned or disposed of, meet the definition of a hazardous waste. These waste streams would typically consist of material brought on site to execute work, but are not fully consumed during the course of construction. Examples may include items such as excess PVC solvent cement.

1.2.4 Land Application for Discharge Water

The term "Land Application" for discharge water implies that the Contractor will discharge water at a rate which allows the water to percolate into the soil. No sheeting action, soil erosion, discharge into storm sewers, discharge into defined drainage areas, or discharge into the "waters of the United States" will occur. Land Application will be in compliance with all applicable Federal, State, and local laws and regulations.

1.2.5 Pests

The term "pests" means arthropods, birds, rodents, nematodes, fungi, bacteria, viruses, algae, snails, marine borers, snakes, weeds and other organisms (except for human or animal disease-causing organisms) that adversely affect readiness, military operations, or the well-being of personnel and animals; attack or damage real property, supplies, equipment, or vegetation; or are otherwise undesirable.

1.2.6 Surface Discharge

The term "Surface Discharge" implies that the water is discharged with possible sheeting action and what subsequent soil erosion may occur. Waters that are surface discharged may terminate in drainage ditches, storm sewers, creeks, and/or "waters of the United States" and would require a permit to discharge water from the governing agency.

1.2.7 Waters of the United States

All waters which are under the jurisdiction of the Clean Water Act, as defined in 33 CFR 328.

1.3 GENERAL REQUIREMENTS

Minimize environmental pollution and damage that may occur as the result of construction operations. The environmental resources within the project boundaries and those affected outside the limits of permanent work will be protected during the entire duration of this contract. The Contractor will comply with all applicable environmental Federal, State, and local laws and regulations. The Contractor will be responsible for any delays resulting from failure to comply with environmental laws and regulations.

1.4 SUBCONTRACTORS

Ensure compliance with this section by subcontractors.

1.5 SUBMITTALS

The following will be submitted in accordance with Section 01330 SUBMITTAL PROCEDURES:

SD-01 Preconstruction Submittals

Erosion, Sediment, and Stormwater Control (as a section in the Remedial Action Work Plan); G

1.6 ENVIRONMENTAL PROTECTION PLAN

An Environmental Protection Plan will be submitted for review and approval by the Contracting Officer, prior to the start of work. The purpose of the Environmental Protection Plan is to present a comprehensive overview of known or potential environmental issues which the Contractor must address during construction. The Contractor will address each topic at a level of detail commensurate with the environmental issue and required construction task(s).

1.6.1 Compliance

No requirement in this Section will be construed as relieving the Contractor of any applicable Federal, State, and local environmental protection laws and regulations. During Construction, the Contractor will be responsible for identifying, implementing, and submitting for approval any additional requirements to be included in the Environmental Protection Plan.

1.6.2 Contents

The environmental protection plan will include, but will not be limited to, the following:

Name(s) of person(s) within the Contractor's organization who is/are responsible for ensuring adherence to the Environmental Protection Plan.

Name of Contracting Officer who is responsible for manifesting hazardous waste to be removed from the site, if applicable.

Name(s) and qualifications of person(s) responsible for training the Contractor's environmental protection personnel.

An erosion and sediment control plan which identifies the type and location of the erosion and sediment controls to be provided. The plan will include monitoring and reporting requirements to assure that the control measures are in compliance with the erosion and sediment control plan, Federal, State, and local laws and regulations. A Storm Water Pollution Prevention Plan (SWPPP) may be substituted for this plan.

1.7 PROTECTION FEATURES

This paragraph supplements the Contract Clause PROTECTION OF EXISTING VEGETATION, STRUCTURES, EQUIPMENT, UTILITIES, AND IMPROVEMENTS. Prior to start of any onsite construction activities, the Contractor and the Contracting Officer will make a joint condition survey. Following the survey, the Contractor will prepare a brief report that describes the features requiring protection under the provisions of the Contract Clauses, which are not specifically identified on the drawings as environmental features requiring protection along with the condition of trees, shrubs and grassed areas immediately adjacent to the site of work and adjacent to the Contractor's assigned storage area and access route(s), as applicable.

1.8 ENVIRONMENTAL ASSESSMENT OF CONTRACT DEVIATIONS

Any deviations from the drawings, plans and specifications which may have an environmental impact will be subject to approval by the Contracting Officer and may require an extended review, processing, and approval time. The Contracting Officer reserves the right to disapprove alternate methods, even

if they are more cost effective, if the Contracting Officer determines that the proposed alternate method will have an adverse environmental impact.

1.9 NOTIFICATION

The Contracting Officer will notify the Contractor in writing of any observed noncompliance with Federal, State or local environmental laws or regulations, permits, and other elements of the Contractor's Environmental Protection plan. The Contractor will, after receipt of such notice, inform the Contracting Officer of the proposed corrective action and take such action when approved by the Contracting Officer. The Contracting Officer may issue an order stopping all or part of the work until satisfactory corrective action has been taken. No time extensions will be granted or equitable adjustments allowed to the Contractor for any such suspensions. This is in addition to any other actions the Contracting Officer may take under the contract, or in accordance with the Federal Acquisition Regulation or Federal Law.

PART 2 PRODUCTS (NOT USED)

PART 3 EXECUTION

3.1 ENVIRONMENTAL PERMITS AND COMMITMENTS

The Contractor will be responsible for obtaining and complying with all environmental permits and commitments required by Federal, State, Regional, and local environmental laws and regulations.

3.2 LAND RESOURCES

The Contractor will confine all activities to areas defined by the drawings and specifications. Prior to the beginning of any construction, the contracting officer will identify any land resources to be preserved within the work area. Except in areas indicated on the drawings or specified to be cleared, the Contractor will not remove, cut, deface, injure, or destroy land resources including trees, shrubs, vines, grasses, topsoil, and land forms without approval. No ropes, cables, or guys will be fastened to or attached to any trees for anchorage unless specifically authorized. The Contractor will provide effective protection for land and vegetation resources at all times as defined in the following subparagraphs. Stone, soil, or other materials displaced into uncleared areas will be removed by the Contractor.

3.2.1 Work Area Limits

Prior to commencing construction activities, the areas that will be disturbed under this contract will be marked. Isolated areas within the general work area which are not to be disturbed will be marked or fenced. Monuments and markers will be protected before construction operations commence. Where construction operations are to be conducted during darkness, any markers will be visible in the dark. Field personnel will be knowledgeable of the purpose for marking and/or protecting particular objects.

3.2.2 Landscape

Trees, shrubs, vines, grasses, land forms and other landscape features indicated and defined on the drawings to be preserved will be clearly identified by marking, fencing, or wrapping with boards, or any other

approved techniques. The Contractor will restore landscape features damaged or destroyed during construction operations outside the limits of the approved work area.

3.2.3 Erosion and Sediment Controls

The Contractor will provide erosion and sediment control measures in accordance with Federal, State, and local laws and regulations. The erosion and sediment controls selected and maintained by the Contractor will be such that water quality standards are not violated as a result of the construction activities. The area of bare soil exposed at any one time by construction operations should be kept to a minimum. Temporary erosion and sediment control best management practices (BMPs) will be used during construction work. BMPs may include, but not be limited to, vegetation cover, stream bank stabilization, slope stabilization, silt fences, sediment traps, inlet and outfall protection, diversion channels, and sedimentation basins. The best management practices will be in accordance with the National Pollutant Discharge Elimination System (NPDES) Storm Water Pollution Prevention Plan (SWPPP). Any temporary measures will be removed after the area has been stabilized.

3.2.4 Contractor Temporary Facilities and Work Areas

Field offices, staging areas, stockpile storage, and temporary buildings will be placed where directed by the Contracting Officer. Temporary movement or relocation of facilities will be made only when approved. Erosion and sediment controls will be provided for on-site borrow and spoil areas to prevent sediment from entering nearby waters. Temporary excavation and embankments for plant and/or work areas will be controlled to protect adjacent areas.

3.3 WATER RESOURCES

The Contractor will monitor construction activities to prevent pollution of surface and ground waters. Toxic or hazardous chemicals will not be applied to soil or vegetation unless otherwise indicated. All water areas affected by construction activities will be monitored by the Contractor. For construction activities immediately adjacent to impaired surface waters, the Contractor will be capable of quantifying sediment or pollutant loading to that surface water when required by State or Federally issued Clean Water Act permits.

3.3.1 Dewatering Operations

Construction operations for dewatering, will be controlled at all times to maintain compliance with existing State water quality standards and designated uses of the surface water body. The Contractor will comply with the State of California water quality standards and anti-degradation provisions and the Clean Water Act Section 404.

3.4 AIR RESOURCES

Equipment operation, activities, or processes performed by the Contractor will be in accordance with all Federal and State air emission and performance laws and standards.

3.4.1 Particulates

Dust particles; aerosols and gaseous by-products from construction activities; and processing and preparation of materials, will be controlled at all times, including weekends, holidays and hours when work is not in progress. Excavations, stockpiles, haul roads, permanent and temporary access roads, plant sites, spoil areas, borrow areas, and other work areas within or outside the project boundaries will be maintained free from particulates which would cause the Federal, State, and local air pollution standards to be exceeded or which would cause a hazard or a nuisance. Sprinkling, chemical treatment of an approved type, baghouse, scrubbers, electrostatic precipitators or other methods will be permitted to control particulates in the work area. Sprinkling, to be efficient, must be repeated to keep the disturbed area damp at all times. Particulate control will be performed as the work proceeds and whenever a particulate nuisance or hazard occurs. The Contractor will comply with all State and local visibility regulations.

3.4.2 Odors

Odors from construction activities will be controlled at all times. The odors will not cause a health hazard and will be in compliance with State regulations and/or local ordinances.

3.4.3 Sound Intrusions

The Contractor will keep construction activities under surveillance and control to minimize environment damage by noise. The Contractor will comply with the provisions of the State of California rules.

3.4.4 Burning

Burning will be prohibited on the Government premises.

3.5 AIR EMISSION CONTROL

The Contractor will implement air emission controls to meet applicable regulations.

3.6 CHEMICAL MATERIALS MANAGEMENT AND WASTE DISPOSAL

The Contractor will be solely responsible for complying with Federal, State, and local requirements for transporting contaminated materials through the applicable jurisdictions and will bear responsibility and cost for any noncompliance.

3.7 HISTORICAL, ARCHAEOLOGICAL, AND CULTURAL RESOURCES

If during excavation or other construction activities any previously unidentified or unanticipated historical, archaeological, and cultural resources are discovered or found, all activities that may damage or alter such resources will be temporarily suspended. Resources covered by this paragraph include but are not limited to: any human skeletal remains or burials; artifacts; shell, midden, bone, charcoal, or other deposits; rock or coral alignments, pavings, wall, or other constructed features; and any indication of agricultural or other human activities. Upon such discovery or find, the Contractor will immediately notify the Contracting Officer so that the appropriate authorities may be notified and a determination made as to their significance and what, if any, special disposition of the finds should be made. The Contractor will cease all activities that may result in impact

to or the destruction of these resources. The Contractor will secure the area and prevent employees or other persons from trespassing on, removing, or otherwise disturbing such resources.

3.8 PREVIOUSLY USED EQUIPMENT

The Contractor will clean all previously used construction equipment prior to bringing it onto the project site.

3.9 MILITARY MUNITIONS

In the event that military munitions (as defined in 40 CFR 260) are uncovered or discovered the Contractor will immediately stop work in that area and immediately inform the Contracting Officer.

3.10 TRAINING OF CONTRACTOR PERSONNEL

Contractor's personnel will be trained in all phases of environmental protection and pollution control safety meetings. The Contractor will conduct environmental protection/pollution control meetings for personnel prior to commencing construction activities. Additional meetings will be conducted for new personnel and when site conditions change.

3.11 CONTAMINATED MEDIA MANAGEMENT

Contaminated environmental media consisting of, but not limited to, ground water, soils, and sediments will be managed. Waste will be stored, transported, and disposed according to applicable regulations and Specification 02120.

3.12 POST CONSTRUCTION CLEANUP

The Contractor will clean up all areas used during construction activities.

- - End of Section - -

CONSTRUCTION QUALITY CONTROL

PART 1 GENERAL

The specifications will be consistent with the design/build contract.

1.1 REFERENCES

The publications listed below form a part of this specification to the extent referenced. The publications are referred to in the text by the basic designation only.

AMERICAN SOCIETY FOR TESTING AND MATERIALS (ASTM)

ASTM D 3740	Minimum Requirements for Agencies Engaged in the Testing and/or Inspection of Soil and Rock as Used in Engineering Design and Construction
ASTM E 329	Agencies Engaged in the Testing and/or Inspection of Materials Used in Construction

U.S. ARMY CORPS OF ENGINEERS (USACE)

EM 385-1-1	Safety and Health Requirements Manual

1.2 SUBMITTALS

Government approval is required for submittals with a "G" designation; submittals not having a "G" designation are for information only or as otherwise designated. When used, a designation following the "G" designation identifies the office that will review the submittal for the Government. The following will be submitted in accordance with Section 01330 SUBMITTAL PROCEDURES:

SD-01 Preconstruction Submittals

Construction Quality Control (CQC) Plan; G:
Submit a CQC Plan as an Appendix to the Design Submittal. Include a preliminary list of definable features of work that will cover the first 90 days of construction (i.e., well construction).

SD-06 Reports

Routine QC Reports:
Submit routine QC reports as described in the CQC Plan and listed in Section 1.3 below as required during construction.

1.3 INFORMATION FOR THE CONTRACTING OFFICER

The Contractor will present the report forms in the CQC Plan. The report forms will consist of the Daily Production Report, Daily Quality Control Report, Preparatory Phase Checklist, Initial Phase Checklist, Rework Items List, and Testing Plan and Log. Other reports may also be submitted in formats customarily used by the Contractor.

Deliver the following to the Contracting Officer as required during Construction:

Daily Quality Control Report: Submit the report electronically by 10:00 AM the next working day after each day that work is performed. Include results of all field tests conducted. Include rework items: items that require rework and items that have been satisfactorily reworked. Deliver via email (or hand deliver) to the Contracting Officer.

Daily Production Report: Submit the report via email (or hand deliver) by 10:00 AM the next working day after each day that work is performed.

Preparatory Phase Checklist: Submit the report via email (or hand deliver) to the Contracting Officer.

Initial Phase Checklist: Submit the report via email (or hand deliver).

Summary of Tests (i.e., testing plan and log): Submit the summary of tests for each definable feature of work as an attachment to the Daily Quality Control Report at the end of each month. Include the activity, test method/standard, reference to applicable specification section or project plan, frequency of testing, estimated total number of tests, responsible testing subcontractor, and responsible personnel. Submit via email or hand deliver to the Contracting Officer.

QC Meeting Minutes: Notify the Contracting Officer 48 hours in advance of QC Meetings. Submit a copy of QC meeting minutes to the Contracting Officer within 48-hours of the meeting.

1.4 QC PROGRAM REQUIREMENTS

Establish and maintain a QC program. The QC program consists of a QC Organization, under the cognizance of the Project Quality Control Manager, the Quality Control Engineer, QC Plan(s), QC meetings, three phases of control, submittal review and approval, testing, and completion inspections. The QC program will cover on-site and off-site work and will be keyed to the work sequence.

1.4.1 Acceptance of CQC Plan

The Contractor's Construction Quality Control Plan will be approved by the Contracting Officer prior to the start of field work.

1.4.2 Notification of Changes

Notify the Contracting Officer, in writing, of any proposed change, including changes in the QC organization personnel, a minimum of seven (7) calendar days prior to a proposed change. Proposed changes will be subject to acceptance by the Contracting Officer.

1.5 QC ORGANIZATION

1.5.1 Program QC Manager

The Program QC manager is responsible for developing the QC process and supervising audits of projects within the remedial action program for compliance with program and project-specific procedures and specifications.

1.5.2 Project QC Manager

The Project QC Manager will be a registered professional engineer in the State of California, and will review and stamp the 100% Design Submittal.

1.5.3 Project QC Engineer

The Project QC Engineer will have a minimum of three years experience in construction quality control, and will have completed the U.S. Army Corps of Engineers training course "Construction Quality Management for Contractors." The Project QC Engineer is responsible for ensuring that field personnel, subcontractors and vendors comply with project requirements and contractual obligations for QC and that all field activities are performed as required by the project design and that all field activities meet the contract requirements.

1.6 CONSTRUCTION QUALITY CONTROL (CQC) PLAN

1.6.1 Requirements

A Construction Quality Control (CQC) Plan will be submitted as an Appendix to the Design Submittal. The CQC Plan will cover on-site work, off-site testing, and the following categories:

I. Introduction
II. Project Description
III. Quality Control Organization
IV. Responsibilities of Project Personnel
V. Delegation of QC Authority
VI. Definable Features of Work
VII. Procedures for Submittals
VIII. Testing Procedures
IX. Inspection Procedures and Phases of Control
X. Deficiencies and Corrective Action
XI. Reporting Procedures
XII. Notifications of Changes to Procedures
XIII. Audit

1.6.1.1 Additional Information in the CQC Plan

The following additional information will be provided in the CQC Plan:

Meetings: Brief discussion of meetings such as the Kick-off Meeting/Formal Site Visit; Progress Team Meetings; Other Meetings; Readiness Review.

List of Definable Features of Work: list of the definable features of work for the project.

Submittal Register: provide an example of the submittal register form.

Submittal Review procedures: description of review process.

Transmittal Form: provide an example of the transmittal form.

Other Forms: provide examples of the Daily Quality Control Report, Daily Production Report, Preparatory Phase Checklist, Preparatory Phase Checklist for Chemical Data, Initial Phase Checklist, and Follow-Up Phase Checklist Forms.

Geotechnical and Analytical Testing Laboratories: Name of testing laboratories proposed to chemical data analysis, and to perform soil, concrete, and other geotechnical tests.

Test Results: description of how test results are documented.

Final Phase Inspection: description of how a final phase inspection is documented.

Documentation of Deficiencies: description of how to document deficiencies, corrective actions taken, and root causes of deficiencies.

1.7 QC Meetings

Weston will record the meeting minutes for the Kick-Off Meeting/Formal Site Visit, Progress Team Meetings, Weekly Progress Meetings, and Readiness Review Meetings.

During construction, Weekly Progress Meetings will be held and the following items will be discussed: construction progress; Requests for Information; and schedule updates. Weston will prepare the agenda and the minutes for the Weekly Progress Meetings.

Prior to start of any definable feature of work, Weston will conduct a readiness review with the Contracting Officer. The following information will be discussed: status of applicable permits and/or notification; personnel or subcontractors who will be performing the work, review of applicable plans/procedures/specifications/drawings; calibration of instruments. Weston will provide the agenda and take meeting minutes.

1.8 INSPECTION PROCEDURES FOR THREE PHASES OF CONTROL

The Three Phases of Control will cover on-site and off-site work/tests and will include Preparatory, Initial, and Follow-Up Phase Inspections (i.e. "control") for each definable feature of work.

1.8.1 Preparatory Phase

Notify the Contracting Officer at least 2 working days in advance of each preparatory phase. The Preparatory Phase will include a meeting conducted by the QC Engineer and will be attended by the Site Superintendent, and the foreman responsible for the definable feature. Document the results of the preparatory phase actions in the Daily Quality Control Report and in the Preparatory Phase Checklist. Perform the following items prior to beginning work on each definable feature of work, and document them on the Preparatory Phase Checklist:

Attendees: Record attendees present at the meeting.

Submittals: Verify that submittals for materials and equipment have been submitted and approved. Verify that approved materials are on-hand (if not, document items missing); Verify approved submittals against delivered materials.

Material Storage: Verify that materials are store properly. If not, described any action that was taken.

Specifications: Review each paragraph of applicable specifications; discuss procedures to accomplish work; clarify any differences.

Preliminary Work and Permits: Ensure the preliminary work, permits, and notifications are on file. If not on file, document action taken.

Testing: Identify tests to be performed, frequency, and by whom; when and where tests are required; review the testing plan and log; ensure that test facilities has been approved.

Safety: Review the Activity Hazard Analysis and ensure that it has been approved; review applicable portions of EM 385-1-1.

Meeting Comments: Document Navy, Contracting Officer, or Regional Officer in Charge of Construction (ROICC) comments during the meeting.

Other Items or Remarks: Document other items or remarks.

1.11.2 Initial Phase

Notify the Contracting Officer at least 2 workdays in advance of each initial phase. When construction crews are ready to start work on a definable feature of work, conduct the initial phase with the Site Superintendent, and the foreman responsible for that definable feature of work. Observe the initial segment of the definable feature of work to ensure that the work complies with Contract requirements. Document the results of the initial phase in the Daily Quality Control Report and in the Initial Phase Checklist. Repeat the initial phase for each new crew to work on-site, or when acceptable levels of specified quality are not being met. Perform the following for each definable feature of work:

Document notification was given to the Contracting Officer:

Personnel Present: document personnel, position, and company/agency affiliation.

Procedure Compliance: identify full compliance with procedures identified at preparatory phase; coordinate plans, specifications, and submittals.

Preliminary Work: Ensure preliminary work is complete and correct; if not document action taken.

Workmanship: Establish the level of workmanship and where the work is located; verify if a sample panel is needed or not.

Resolution of Differences: Document differences and the resolution; note comments.

Safety: Review job conditions using EM-385-1-1 and the job hazard analysis; record comments.

Other: document any other conditions or comments.

1.11.3 Follow-Up Phase

Perform the Follow-Up Phase daily for on-going work or more frequently as necessary until the completion of each definable feature of work and document in the Daily Quality Control Report:

(a) Ensure the work complies with Contract requirements;

(b) Maintain the quality of workmanship required;

(c) Ensure that testing is performed by the approved laboratory;

(d) Ensure that rework items are being corrected; and

(e) Perform safety inspections.

1.11.4 Additional Preparatory and Initial Phases

Additional Preparatory and Initial Phase inspections will be conducted on the same definable features of work if the quality of on-going work is unacceptable, if there are changes in the applicable QC organization, if there are changes in the on-site production supervision or work crew, if work on a definable feature is resumed after substantial period of inactivity, or if other problems develop.

1.12 SUBMITTAL REVIEW AND APPROVAL

Procedures for submission, review and approval of submittals are described in section entitled "Submittal Procedures."

1.13 TESTING

Perform sampling and testing required under this Contract.

1.13.1 Accreditation Requirements

Chemical analytical laboratories and construction materials testing laboratories performing work for the project will be accredited and/or certified.

For chemical data analysis, the laboratories will be certified by the State of California Department of Health Services Environmental Laboratory Accreditation Program (ELAP) and will have successfully completed the Naval Facilities Engineering Service Center laboratory assessment.

For construction material laboratories, the labs will be certified for the ASTM methods that they will be performing: ASTM E 329 for construction materials; ASTM C 1077 for concrete and concrete aggregates; ASTM D 3740 for soil and rock as used for engineering design and construction.

1.13.5 Test Results

For chemical data analysis, the test results will meet the requirements and will be submitted to the Contracting Officer as described in the Final Sampling and Analysis Plan (Weston 2004). Analytical test results will be signed by a laboratory representative authorized to sign the certified test reports (see the Final Sampling and Analysis Plan).

Construction materials, soil, and concrete test results will be signed by a laboratory representative authorized to sign the test reports.

For field tests, furnish a summary report of field tests at the end of each month to the Contracting Officer. Attach a copy of the summary report to the last Daily Quality Control Report of each month.

1.13.6 Test Reports and Monthly Summary Report of Tests

The QC Engineer will furnish the signed reports, certifications, and a summary report of field tests at the end of each month to the Contracting Officer. Attach a copy of the summary report to the last Daily Quality Control Report of each month.

1.14 QC CERTIFICATIONS

1.14.2 Daily Quality Control Report Certification

Each Daily Quality Control Report will contain the following statement: "*On behalf of Weston Solutions, Inc., I certify that this report is complete and correct. Equipment and material used and work performed during this reporting period are in compliance with the contract drawings and specifications to the best of my knowledge, except as noted in this report.*"

1.15 COMPLETION INSPECTIONS

1.15.1 Contractor's Punch-Out Inspection

The Punch-Out Inspection will be performed by the QC Engineer near the completion of work or an increment the work: the QC Engineer and will conduct an inspection of the work and will develop the "punch list" of items that do not conform to the approved drawings and specifications. The punch list will include any items remaining on the rework items list that have not been corrected. A copy of the punch list will be provided to the Contracting Officer. The QC Engineer or staff will make follow-on inspections to ascertain that all deficiencies have been corrected. When this is completed, the QC Engineer will notify the Contracting Officer that the system is ready for inspection.

1.15.2 Pre-Final Inspection

The Navy's Contracting Officer will perform the Pre-Final Inspection to verify that the system has been constructed satisfactorily and is fully operational. A "Pre-Final Punch List" may be developed as a result of this inspection. The Contractor's QC Engineer will ensure that all items on this list are corrected in a timely manner and prior to notification to the Navy that a Final inspection can be scheduled with WESTON.

1.15.3 Final Acceptance Inspection

The Final Acceptance Inspection will be scheduled by the Navy's Contracting Officer based on the results of the Pre-Final Inspection. A management representative of the Contractor will attend this inspection. The Contractor will provide at least a 14 day notice to the Navy's Contracting Officer that the Pre-Final Punch List items and all remaining work has bee completed.

1.16 DOCUMENTATION

Maintain current and complete records of on-site and off-site QC program operations and activities.

1.16.2 Daily Production Report

Daily Production Reports will be completed for each day that work is performed. Reports will accompany the submission of the Daily Quality Control Report prepared for the same day. The requirement will commence at the beginning of the construction phase of work and continue through completion of the contract. Daily Production Reports will be prepared, signed and dated by the project Site Superintendent and will contain the following information:

(a) Date of report, report number, name of contractor, Contract number, title, and location of Contract and Site Superintendent present.

(b) Weather conditions in the morning and in the afternoon including maximum and minimum temperatures.

(c) Identify work performed by corresponding Schedule Activity Number, Modification Number, etc.

(d) List the Contractor and subcontractor personnel on the work site, their trades, employer, work location, description of work performed, hours worked by trade, daily total work hours on work site this date (include hours on continuation sheets), and total work hours from start of construction.

(e) A list of job safety actions taken and safety inspections conducted. Indicate that safety requirements have been met including the results on the following:

(1) Was a job safety meeting held this date? (If YES, attach documentation).
(2) Were there any lost time accidents this date? (If YES, attach the completed OSHA report).
(3) Was crane/man-lift/trenching/scaffold/high voltage electrical/high work/hazmat work done? (If YES, document that the inspection performed.)
(4) Was hazardous material/waste released into the environment? (If YES, attach a description of incident and proposed action.)

(f) Identify Schedule Activity No. related to safety action and list safety actions taken today and safety inspections conducted.

(g) Identify Schedule Activity No., Submittal # and list equipment/material received each day that is incorporated into the job.

(h) Identify Schedule Activity No., Owner and list construction and plant equipment on the work site including the number of hours used.

(i) Include a "remarks" section in this report for pertinent information including directions received, problems during construction, work progress and delays, conflicts or errors in the drawings or specifications, field changes, safety hazards encountered, instructions given and corrective actions taken, delays encountered and a record of visitors to the work site. For each remark given, identify the Schedule Activity No. that is associated with the remark.

Additional space required to contain daily information on the Daily Production Report will be placed on the Continuation Sheet(s).

1.16.3 Daily Quality Control Report

Reports are required for each day that work is performed, for every seven consecutive calendar days of no work, and on the last day of a no-work period. Account for each calendar day throughout the life of the Contract. The reporting of work will be identified by terminology consistent with the construction schedule. Daily Quality Control Reports are to be prepared, signed and dated by the Project QC Engineer (or designee) and will contain the following information:

(a) Date of report, report number, Contract Number, and Contract Title.

(b) Indicate if Preparatory Phase work was performed today (Yes/No)

(c) If Preparatory Phase work was performed today (including on-site and off-site work), identify its Schedule Activity No. and Definable Feature of Work.

(d) Indicate if Initial Phase work was performed today (Yes/No checkboxes).

(e) If Initial Phase work was performed today (including on-site and off-site work), identify its Schedule Activity No. and Definable Feature of Work.

(f) Results of the Follow-up Phase inspections held today (including on-site and off-site work), including Schedule Activity No., the location of the definable feature of work, Specification Sections, etc. Indicate in the report for this definable feature of work that the work complies with the Contract as approved in the Initial Phase, work complies with safety requirements, and that required testing has been performed and include a list of who performed the tests.

(g) List the rework items identified, but not corrected by close of business; along with its associated Schedule Activity Number.

(h) List the rework items corrected from the rework item list along with the corrective action taken and its associated Schedule Activity Number.

(i) Include a "remarks" section in this report which will contain pertinent information including directions received, quality control problem areas, deviations from the QC plan, construction deficiencies encountered, QC meetings held, acknowledgement that as-built drawings have been updated, corrective direction given by the QC Organization and corrective action taken by the Contractor. For each remark given, identify the Schedule Activity No. that is associated with the remark.

(j) Daily Quality Control Report certification, signature and date.

Additional space required to contain daily information on the Daily Quality Control Report will be placed on its Continuation Sheet(s). An unlimited number of Continuation Sheets may be added as necessary and attached to the Daily Quality Control Report.

1.16.4 Preparatory Phase Checklist

Each Definable Feature of Work that is in the Preparatory Phase will have this checklist filled out for it. The checklist will be identified by terminology consistent with the construction schedule. This checklist will accompany the submission of the Daily Quality Control Report of the same date.

(a) Specification Section, date of report, and Contract number will be filled out. Duplicate this information in the header of the second page of the report.

(b) Definable Feature of Work, Schedule Activity No. will match entry in the Preparatory Phase section of the Daily Quality Control Report.

(c) Personnel Present: Indicate the number of hours of advance notice that was given to the Government Representative and indicate (Yes/No) whether or not the Navy Representative was notified. Indicate the Names of Preparatory Phase Meeting attendees, their position, and their associated company/government.

(d) Submittals: Indicate if submittals have been approved (Yes/No), if no indicate what has not been submitted. Are materials on hand (Yes/No) and if not, what items are missing. Check delivered material/equipment against approved submittals and comment as required.

(e) Material Storage: Indicate if materials/equipment is stored properly (Yes/No) and if not, what action is/was taken.

(f) Specifications: Review and comment on Specification Paragraphs that describe the material/equipment, procedure for accomplishing the work and clarify any differences.

(g) Preliminary Work & Permits: Ensure preliminary work is in accordance with the contract documents and necessary permits are on file, if not, describe the action taken.

(h) Testing: Identify who performs tests, the frequency, and where tests are to occur. Review the testing plan, report abnormalities, and if the test facilities have been approved.

(i) Safety: Indicate if the activity hazard analysis has been approved (Yes/No) and comment on the review of the applicable portions of the EM 385-1-1.

(j) Meeting Comments: Note comments and remarks during the Preparatory Phase Meeting that was not addressed in previous sections of this checklist.

(k) Other Items or Remarks: Note any other remarks or items that were a result of the Preparatory Phase.

(l) QC Engineer will sign and date the checklist.

1.16.5 Initial Phase Checklist

Each Definable Feature of Work that is in the Initial Phase will have this checklist filled out. The checklist will be identified by terminology consistent with the construction schedule. This checklist will accompany the submission of the Daily Quality Control Report of the same date.

(a) Specification Section, date of report, and Contract number will be entered.

(b) Definable Feature of Work, Schedule Activity No. will match entry in the Initial Phase section of the Daily Quality Control Report.

(c) Personnel Present: Indicate the number of hours of advance notice that was given to the Navy Representative and indicate (Yes/No) whether or not the Navy Representative was notified. Indicate the Names of Initial Phase Meeting attendees, their position, and name of company or government agency.

(d) Procedure Compliance: Comment on compliance with procedures identified at Preparatory Phase of Control and assurance that work is in accordance with plans, specifications and submittals.

(e) Preliminary Work: Ensure preliminary work being placed is in compliance and if not, what action is/was taken.

(f) Workmanship: Identify where initial work is located; if a sample panel is required (Yes/No); is the initial work the sample (Yes/No); and if Yes, describe the panel location and precautions taken to preserve the sample.

(g) Resolution: Comment on any differences and the resolutions reached.

(h) Check Safety: Comment on the safety review of the job conditions.

(i) Other: Note any other remarks or items that were a result of the Initial Phase.

(j) QC Engineer will sign and date the checklist.

1.16.6 Quality Control Binders on-Site

At the Project Site, establish and maintain a series of 3 ring binders that are described below. These binders will be readily available to the Navy during all business hours.

(a) All completed Preparatory and Initial Phase Checklists arranged chronologically.
(b) Inspections, arranged chronologically.
(c) A current copy of the Testing and Plan Log with supporting field test reports, arranged chronologically.
(d) A current copy of the Rework Items List.
(e) Current copies of all punch lists issued by the Contractor's QC Staff and all punch lists issued by the Navy.

1.16.8 Testing Plan and Log

As tests are performed, the QC Engineer will record on the "Testing Plan and Log" the date the test was conducted, the date the test results were forwarded to the Contracting Officer, remarks and acknowledgement that an accredited or Contracting Officer approved testing laboratory was used. Attach a copy of the updated "Testing Plan and Log" to the last Daily Quality Control Report of each month.

1.16.9 Rework Items List

The QC Engineer will maintain a list of work that does not comply with the Contract, identifying what items need to be reworked, the date the item was originally discovered, the date the item will be corrected by, and the date the item was corrected. There is no requirement to report a rework item that is corrected the same day it is discovered. Attach a copy of the "Rework Items List" to the last Daily Quality Control Report of each month. The Contractor will be responsible for including on this list items needing rework including those identified by the Contracting Officer.

1.16.10 As-Built Drawings

The QC Engineer is required to ensure the as-built drawings, required by Section 01770 "Closeout Procedures," are kept current on a daily basis and marked to show deviations which have been made from the Contract drawings. Ensure each deviation has been identified with the appropriate modifying documentation (e.g. PC No., Modification No., Request for Information No., etc.). The QC Engineer will initial each deviation and each revision. Upon completion of work, the QC Engineer will furnish a certificate attesting to the accuracy of the as-built drawings prior to submission to the Contracting Officer.

1.16.11 Report Forms

The following forms will be used at the site:

(a) Daily Quality Control Report w/ continuation sheet(s).

(b) Daily Production Report w/ continuation sheet(s).

(c) Preparatory Phase Checklist.

(d) Initial Phase Checklist.

(e) Testing Plan and Log.

(f) Rework Items List.

1.17 NOTIFICATION ON NON-COMPLIANCE

The Contracting Officer will notify the Contractor of any detected non-compliance with the requirements. The Contractor's Project Manager will discuss necessary corrective actions, dates, and other issues with the Navy's Remedial Project Manager after receipt of any notice.

PART 2 PRODUCTS

Not used.

PART 3 EXECUTION

Not used.

- - End of Section - -

SECTION 01525

SAFETY AND OCCUPATIONAL HEALTH REQUIREMENTS

PART 1 GENERAL

The specifications shall be consistent with the design/build contract.

1.1 REFERENCES

The publications listed below form a part of this specification to the extent referenced. The publications are referred to within the text by the basic designation only.

AMERICAN NATIONAL STANDARDS INSTITUTE (ANSI)

ANSI Z359.1	Safety Requirements for Personal Fall Arrest Systems, Subsystems and Components

OCCUPATIONAL SAFETY AND HEALTH ADMINISTRATION (OSHA)

29 CFR 1910	Occupational Safety and Health Standards
29 CFR 1910.94	Ventilation
29 CFR 1910.120	Hazardous Waste Operations and Emergency Response
29 CFR 1910.146	Permit-required Confined Spaces
29 CFR 1915	Confined and Enclosed Spaces and Other Dangerous Atmospheres in Shipyard Employment
29 CFR 1926	Safety and Health Regulations for Construction
29 CFR 1926.65	Hazardous Waste Operations and Emergency Response
29 CFR 1926.450	Scaffolds
29 CFR 1926.500	Fall Protection

U. S. ARMY CORPS OF ENGINEERS (USACE)

EM 385-1-1	Safety and Health Requirements Manual

1.2 SUBMITTALS

The following shall be submitted in accordance with Section 01330 SUBMITTAL PROCEDURES:

SD-01 Preconstruction Submittals

Site Health and Safety Plan (HASP), as an Appendix to the Remedial Action Work Plan.

SD-06 Reports

Safety Reports to submitted as appropriate along with the Daily QC Report:

Accident Reports
Monthly Exposure Reports
Regulatory Citations and Violations

SD-07 Certificates

Confined Space Entry Permit: Submit one copy of each permit attached to each Daily QC Report.

1.3 DEFINITIONS

Certified Safety Professional (CSP). An individual who is currently certified by the Board of Certified Safety Professionals.

High Visibility Accident. Any mishap which may generate publicity and/or high visibility.

Low-slope roof. A roof having a slope less than or equal to 4 in 12 (vertical to horizontal).

Medical Treatment. Treatment administered by a physician or by registered professional personnel under the standing orders of a physician. Medical treatment does not include first aid treatment even though provided by a physician or registered personnel.

Multi-Employer Work Site (MEWS). A multi-employer work site, as defined by OSHA, is one in which many employers occupy the same site. The Government considers the Prime Contractor to be the "controlling authority" for all work site safety and health of the subcontractors.

Recordable Injuries or Illnesses. Any work-related injury or illness that results in:

(1) Death, regardless of the time between the injury and death, or the length of the illness;

(2) Days away from work;

(3) Restricted work;

(4) Transfer to another job;

(5) (5)Medical treatment beyond first aid;

(6) Loss of consciousness; or

(7) A significant injury or illness diagnosed by a physician or other licensed health care professional, even if it did not result in (1) through (6) above.

Site Safety and Health Officer (SSHO). The superintendent or other qualified or competent person who is responsible for the on-site safety and health required for the project. The Contractor quality control (QC) person cannot be the SSHO, even though the QC has safety inspection responsibilities as part of the QC duties.

Steep roof. A roof having a slope greater than 4 in 12 (vertical to horizontal).

"USACE" property and equipment specified in USACE EM 385-1-1 should be interpreted as Government property and equipment.

1.4 REGULATORY REQUIREMENTS

In addition to the detailed requirements included in the provisions of this contract, work performed shall comply with USACE EM 385-1-1, and all the applicable federal, state, and local laws, ordinances, criteria, rules and regulations. Submit matters of interpretation of standards to the appropriate administrative agency for resolution before starting work. Where the requirements of this specification, applicable laws, criteria, ordinances, regulations, and referenced documents vary, the most stringent requirements shall apply.

1.5 DRUG PREVENTION PROGRAM

Ensure that employees do not use illegal drugs or consume alcohol during work hours. Ensure there are no employees under the influence of drugs or alcohol during work hours. After accidents, collect blood, urine, or saliva specimens and test the injured and involved employees for the influence of drugs and alcohol. A copy of the test shall be made available to the Contracting Officer upon request.

1.6 SITE QUALIFICATIONS, DUTIES, AND MEETINGS

1.6.1 Personnel Qualifications

1.6.1.1 Site Safety and Health Officer (SSHO)

Site Safety and Health Officer (SSHO) shall be provided at the work site at all times to perform safety and occupational health management, surveillance, inspections, and safety enforcement for the Contractor. The SSHO shall meet the following requirements:

A minimum of 10 years safety work of a progressive nature with at least 5 years of experience on similar projects.

30-hour OSHA construction safety class or equivalent within the last 5 years. An average of at least 24 hours of formal safety training each year for the past 5 years with training for competent person status for at least the following 4 areas of competency: Excavation; Scaffolding; Fall protection; Hazardous energy; Confined space; Health hazard recognition, evaluation and control of chemical, physical and biological agents; Personal protective equipment and clothing to include selection, use and maintenance.

1.6.1.2 Certified Safety Professional (CSP)

Provide a Certified Safety Professional (CSP) at the work site to perform safety and occupational health management, surveillance, inspections, and safety enforcement for the Contractor. The CSP shall be the safety and occupational health "competent person" as defined by USACE EM 385-1-1.

1.6.1.3 Competent Person for Confined Space Entry

Provide a competent person meeting the requirements of EM 385-1-1 who is assigned in writing by the Designated Authority to assess confined spaces and who possesses demonstrated knowledge, skill and ability to:

Identify the structure, location, and designation of confined and permit-required confined spaces where work is done;

Calibrate and use testing equipment including but not limited to, oxygen indicators, combustible gas indicators, carbon monoxide indicators, and carbon dioxide indicators, and to interpret accurately the test results of that equipment;

Perform all required tests and inspections specified in 29 CFR 1910.146 and 29 CFR 1915 Subpart B;

Assess hazardous conditions including atmospheric hazards in confined space and adjacent spaces and specify the necessary protection and precautions to be taken;

Determine ventilation requirements for confined space entries and operations;

Assess hazards associated with hot work in confined and adjacent space and determine fire watch requirements; and,

Maintain records required.

1.6.1.4 Competent Person for the Health Hazard Control and Respiratory Protection Program

Provide a competent person meeting the requirements of EM 385-1-1 who is:

Capable by education, specialized training and/or experience of anticipating, recognizing, and evaluating employee exposure to hazardous chemical, physical and biological agents in accordance with USACE EM 385-1-1, Section 6.

Capable of specifying necessary controls and protective actions to ensure worker health.

1.6.2 Personnel Duties

1.6.2.1 Site Safety and Health Officer (SSHO)/Superintendent

Conduct daily safety and health inspections and maintain a written log which includes area/operation inspected, date of inspection, identified hazards, recommended corrective actions, estimated and actual dates of corrections. Safety inspection logs shall be attached to the Contractors' daily report.

Conduct mishap investigations and complete required reports. Maintain the OSHA Form 300 and Daily Production reports for prime and sub-contractors.

Maintain applicable safety reference material on the job site.

Attend the pre-construction conference, pre-work meetings including preparatory inspection meeting, and periodic in-progress meetings.

Implement and enforce accepted APPS and AHAs.

Maintain a safety and health deficiency tracking system that monitors outstanding deficiencies until resolution. A list of unresolved safety and health deficiencies shall be posted on the safety bulletin board.

Ensure sub-contractor compliance with safety and health requirements.

Failure to perform the above duties will result in dismissal of the superintendent and/or SSHO, and a project work stoppage. The project work stoppage will remain in effect pending approval of a suitable replacement.

1.6.2.2 Certified Safety Professional (CSP)

Perform safety and occupational health management, surveillance, inspections, and safety enforcement for the project.

Perform as the safety and occupational health "competent person" as defined by USACE EM 385-1-1.

Be on site at least monthly whenever work or testing is being performed.

Conduct and document safety inspections.

Shall have no other duties other than safety and occupational health management, inspections, and enforcement on this contract.

If the CSP is appointed as the SSHO all duties of that position shall also be preformed.

1.6.3 Meetings

1.6.3.1 Preconstruction Conference

a. The Contractor will be informed, in writing, of the date of the preconstruction conference. The purpose of the preconstruction conference is for the Contractor and the Contracting Officer's representatives to become acquainted and explain the functions and operating procedures of their respective organizations and to reach mutual understanding relative to the administration of the overall project's HASP before the initiation of work.

Contractor representatives who have a responsibility or significant role in accident prevention on the project shall attend the preconstruction conference. This includes the project superintendent, site safety and health officer, quality control supervisor, or any other assigned safety and health professionals who participated in the development of the HSAP.

The Contractor shall discuss the details of the submitted HSAP to include incorporated plans, programs, procedures and a listing of anticipated activity hazard analyses (AHAs) that will be developed and implemented during the performance of the contract. This list of proposed AHAs will be reviewed at the conference and an agreement will be reached between the Contractor and the Contracting Officer's representative as to which phases will require an analysis. In addition, a schedule for the preparation, submittal, review, and acceptance of AHAs shall be established to preclude project delays.

Deficiencies in the submitted HASP will be brought to the attention of the Contractor at the preconstruction conference, and the Contractor shall revise the plan to correct deficiencies and re-submit it for acceptance. Work shall not begin until there is an accepted HSAP.

1.6.3.2 Weekly Safety Meetings

Conduct weekly safety meetings at the project site for all employees. The Contracting Officer will be informed of the meeting in advance and be allowed attendance. Minutes showing contract title, signatures of attendees and a list of topics discussed shall be attached to the Contractors' daily production/QC report.

1.6.3.3 Work Phase Meetings

The appropriate AHA shall be reviewed and attendance documented by the Contractor at the preparatory, initial, and follow-up phases of quality control inspection. The analysis should be used during daily inspections to ensure the implementation and effectiveness of safety and health controls.

1.7 TRAINING

1.7.1 New Employee Indoctrination

New employees (prime and sub-contractor) will be informed of specific site hazards before they begin work. Documentation of this orientation shall be kept on file at the project site.

1.7.2 Periodic Training

Provide Safety and Health Training in accordance with USACE EM 385-1-1 and the accepted APP. Ensure all required training has been accomplished for all onsite employees.

1.7.3 Training on Activity Hazard Analysis (AHA)

Prior to beginning a new phase, training will be provided to all affected employees to include a review of the AHA to be implemented.

1.8 SITE HEALTH AND SAFETY PLAN (HSAP)

The Contractor shall use a qualified person to prepare the written site-specific HSAP. The HSAP shall be incorporated as an appendix of the Remedial Action Work Plan. The HSAP shall be job-specific and shall address any unusual or unique aspects of the project or activity for which it is written. The Government considers the Prime Contractor to be the "controlling authority" for all work site safety and health of the subcontractors. Contractors are responsible for informing their subcontractors of the safety provisions under the terms of the contract and the penalties for noncompliance, coordinating the work to prevent one craft from interfering with or creating hazardous working conditions for other crafts, and inspecting subcontractor operations to ensure that accident prevention responsibilities are being carried out.
Submit the HSAP to the Contracting Officer 15 calendar days prior to the date of the preconstruction conference for acceptance. Work cannot proceed without an accepted HSAP. The Contracting Officer reviews and comments on the Contractor's submitted HSAP and accepts it when it meets the requirements of the contract provisions.

Once accepted by the Contracting Officer, the HSAP and attachments will be enforced as part of the contract. Disregarding the provisions of this contract or the accepted HSAP will be cause for stopping of work, at the discretion of the Contracting Officer, until the matter has been rectified.

Once work begins, changes to the accepted HSAP shall be made with the knowledge and concurrence of the Contracting Officer, project superintendent, SSHO and quality control manager. Should any unforeseen hazard become evident during the performance of work, the project superintendent shall inform the Contracting Officer, both verbally and in writing, for resolution as soon as possible. In the interim, all necessary action shall be taken by the Contractor to restore and maintain safe working conditions in order to safeguard onsite personnel, visitors, the public, and the environment.

Copies of the accepted HSAP will be maintained at the resident engineer's office and at the job site. The HSAP shall be continuously reviewed and

amended, as necessary, throughout the life of the contract. Unusual or high-hazard activities not identified in the original HSAP shall be incorporated in the plan as they are discovered.

The HSAP shall include the following elements:

- Emergency Response and Contingency Plans
- Training Plan
- Medical Surveillance
- Field Activities
- Hazard Identification and Risk Assessment
- Activity Hazard Analysis
- Air Monitoring
- Site Control
- Personal Protective Equipment Selection
- Decontamination
- Utility Safety Requirements
- General Site Safety Procedures
- Site Filed Log Books

1.9 ACTIVITY HAZARD ANALYSIS (AHA)

The Activity Hazard Analysis (AHA) shall be incorporated as a section of the HSAP. Submit the AHA for review at least 15 calendar days prior to the start of each phase. Format subsequent AHA as amendments to the HSAP. An AHA will be developed by the Contractor for every operation involving a type of work presenting hazards not experienced in previous project operations or where a new work crew or subcontractor is to perform work. The analysis must identify and evaluate hazards and outline the proposed methods and techniques for the safe completion of each phase of work. At a minimum, define activity being performed, sequence of work, specific safety and health hazards anticipated, control measures (to include personal protective equipment) to eliminate or reduce each hazard to acceptable levels, equipment to be used, inspection requirements, training requirements for all involved, and the competent person in charge of that phase of work. An activity requiring an AHA shall not proceed until the AHA has been accepted by the Contracting Officer's representative and a meeting has been conducted by the Contractor to discuss its contents with everyone engaged in the activity. The Contractor shall document meeting attendance at the preparatory, initial, and follow-up phases of quality control inspection. The AHA shall be continuously reviewed and, when appropriate, modified to address changing site conditions or operations. The analysis should be used during daily inspections to ensure the implementation and effectiveness of the activity's safety and health controls.

Activity hazard analyses shall be updated as necessary to provide an effective response to changing work conditions and activities. The on-site superintendent, site safety and health officer and competent persons used to develop the AHAs, including updates, shall sign and date the AHAs before they are implemented.

1.10 DISPLAY OF SAFETY INFORMATION

Within 3 calendar days after commencement of work, erect a safety bulletin board at the job site. The following information shall be displayed on the safety bulletin board in clear view of the on-site construction personnel, maintained current, and protected against the elements and unauthorized removal:

Map denoting the route to the nearest emergency care facility.

Emergency phone numbers.

Copy of the most up-to-date APP.

AHA(s).

OSHA 300A Form.

Confined space entry permit.

A sign indicating the number of hours worked since last lost workday accident.

OSHA Safety and Health Protection-On-The-Job Poster.

Safety and Health Warning Posters.

1.11 SITE SAFETY REFERENCE MATERIALS

Maintain safety-related references applicable to the project, including those listed in the article "References." Maintain applicable equipment manufacturer's manuals.

1.12 EMERGENCY MEDICAL TREATMENT

Contractors will arrange for their own emergency medical treatment. Government has no responsibility to provide emergency medical treatment.

1.13 REPORTS

1.13.1 Accident Reports

For recordable injuries and illnesses, and property damage accidents resulting in at least $2,000 in damages, the Prime Contractor shall conduct an accident investigation to establish the root cause(s) of the accident, complete the Navy Contractor Significant Incident Report (CSIR) form and provide the report to the Contracting Officer within 1 calendar day of the accident. The Contracting Officer will provide copies of any required or special forms.

For a weight handling equipment accident the Prime Contractor shall conduct an accident investigation to establish the root cause(s) of the accident, complete the Accident Report form and provide the report to the Contracting Officer within 30 calendar days of the accident. The Contracting Officer will provide a blank copy of the accident report form.

1.13.2 Accident Notification

Notify the Contracting Officer as soon as practical, but not later than four hours, after any accident meeting the definition of Recordable Injuries or Illnesses or High Visibility Accidents, property damage equal to or greater than $2,000, or any weight handling equipment accident involving a collapsed boom, or any other major damage to the adjacent property. Information shall include contractor name; contract title; type of contract; name of activity, installation or location where accident occurred; date and time of accident; names of personnel injured; extent of property damage, if any; extent of injury, if known, and brief description of accident (to include type of construction equipment used, PPE used, etc). Preserve the conditions and evidence on the accident site until the Government investigation team arrives on site and Government investigation is conducted.

1.13.3 Monthly Exposure Reports

Monthly exposure reporting to the Contracting Officer is required to be attached to the monthly billing request. This report is a compilation of employee-hours worked each month for all site workers, both prime and subcontractor. The Contracting Officer will provide copies of any special forms.

1.13.4 Regulatory Citations and Violations

Contact the Contracting Officer immediately of any OSHA or other regulatory agency inspection or visit, and provide the Contracting Officer with a copy of each citation, report, and contractor response. Correct violations and citations promptly and provide written corrective actions to the Contracting Officer.

1.14 HOT WORK

Prior to performing "Hot Work" (welding, etc.) or operating other flame-producing devices, a written permit shall be requested from the Fire Division. CONTRACTORS ARE REQUIRED TO MEET ALL CRITERIA BEFORE A PERMIT IS ISSUED. The Contractor will provide at least two (2) twenty (20) pound 4A:20 BC rated extinguishers for normal "Hot Work". All extinguishers shall be current inspection tagged, approved safety pin and tamper resistant seal. It is also mandatory to have a designated FIRE WATCH for any "Hot Work" done at this activity.

Oil painting materials (paint, brushes, empty paint cans, etc.), and all flammable liquids shall be removed from the facility at quitting time. All painting materials and flammable liquids shall be stored outside in a suitable metal locker or box and will require re-submittal with non-hazardous materials.

Accumulation of trays, paper, shavings, sawdust, boxes and other packing materials shall be removed from the facility at the close of each workday and such material disposed of in the proper containers located away from the facility.

The storage of combustible supplies shall be a safe distance from structures.

d. Area outside the facility undergoing work shall be cleaned of trash, paper, or other discarded combustibles at the close of each workday.

All portable electric devices (saws, sanders, compressors, extension chord, lights, etc.) shall be disconnected at the close of each workday. When possible, the main electric switch in the facility shall be deactivated.

When starting work in the facility, Contractors shall require their personnel to familiarize themselves with the location of the nearest fire alarm boxes and place in memory the emergency Fire Division phone number. ANY FIRE, NO MATTER HOW SMALL, SHALL BE REPORTED TO THE RESPONSIBLE FIRE DIVISION IMMEDIATELY.

PART 2 PRODUCTS

2.1 FALL PROTECTION ANCHORAGE

Fall protection anchorage, conforming to ANSI Z359.1, will be left in place and so identified for continued customer use.

2.2 CONFINED SPACE SIGNAGE

The Contractor shall provide permanent signs integral to or securely attached to access covers for new permit-required confined spaces. Signs wording: "DANGER--PERMIT-REQUIRED CONFINED SPACE - DO NOT ENTER -" in bold letters a minimum of one inch in height and constructed to be clearly legible with all paint removed. The signal word "DANGER" shall be red and readable from 5 feet.

PART 3 EXECUTION

3.1 CONSTRUCTION AND/OR OTHER WORK

The Contractor shall comply with USACE EM 385-1-1, NFPA 241, the APP, the AHA, and other related submittals and activity fire and safety regulations.

3.1.1 Hazardous Material Use

Each hazardous material must receive approval prior to being brought onto the job site or prior to any other use in connection with this contract. Allow a minimum of 10 working days for processing of the request for use of a hazardous material. Any work or storage involving hazardous chemicals or materials must be done in a manner that will not expose Government or Contractor employees to any unsafe or unhealthful conditions. Adequate protective measures must be taken to prevent Government or Contractor employees from being exposed to any hazardous condition that could result from the work or storage. The Prime Contractor shall keep a complete inventory of hazardous materials brought onto the work-site. Approval by the Contracting Officer of protective measures and storage area is required prior to the start of the work.

3.1.2 Hazardous Material Exclusions

Notwithstanding any other hazardous material used in this contract, radioactive materials or instruments capable of producing ionizing/non-ionizing radiation (with the exception of radioactive material and devices used in accordance with EM 385-1-1 such as nuclear density meters for compaction testing and laboratory equipment with radioactive sources) as well as materials which contain asbestos, mercury or polychlorinated biphenyls, di-isocynates, lead-based paint are prohibited. The Contracting Officer, upon written request by the Contractor, may consider exceptions to the use of any of the above excluded materials.

3.1.3 Unforeseen Hazardous Material

If [additional] material, not indicated, that may be hazardous to human health upon disturbance during construction operations is encountered, stop that portion of work and notify the Contracting Officer immediately. Within 14 calendar days the Government will determine if the material is hazardous. If material is not hazardous or poses no danger, the Government will direct the Contractor to proceed without change. If material is hazardous and handling of the material is necessary to accomplish the work, the Government will issue a modification pursuant to "FAR 52.243-4, Changes" and "FAR 52.236-2, Differing Site Conditions."

3.2 PRE-OUTAGE COORDINATION MEETING

Contractors are required to apply for utility outages at least 15 days in advance. As a minimum, the request should include the location of the outage,

utilities being affected, duration of outage and any necessary sketches. Special requirements for electrical outage requests are contained elsewhere in this specification section. Once approved, and prior to beginning work on the utility system requiring shut down, the Contractor shall attend a pre-outage coordination meeting with the Contracting Officer and the Station Utilities Department to review the scope of work and the lock-out/tag-out procedures for worker protection. No work will be performed on energized electrical circuits unless proof is provided that no other means exist.

3.3 FALL HAZARD PROTECTION AND PREVENTION

The Contractor shall establish a fall protection and prevention program, for the protection of all employees exposed to fall hazards. The program shall include company policy, identify responsibilities, education and training requirements, fall hazard identification, prevention and control measures, inspection, storage, care and maintenance of fall protection equipment and rescue and escape procedures.

3.3.1 Training

The Contractor shall institute a fall protection training program. As part of the Fall Hazard Protection and Prevention Program, the Contractor shall provide training for each employee who might be exposed to fall hazards. Training requirements shall be in accordance with USACE EM 385-1-1, section 21.A.16.

3.3.2 Fall Protection Equipment

The Contractor shall enforce use of the fall protection equipment designated for each specific work activity in the Fall Protection and Prevention Plan and/or AHA at all times when an employee is on a surface 6 feet or more above lower levels. Fall protection systems such as guardrails, personnel fall arrest system, safety nets, etc., are required when working within 6 feet of any leading edge. In addition to the required fall protection systems, safety skiff, personal floatation devices, life rings etc., are required when working above or next to water in accordance with USACE EM 385-1-1, paragraphs 05.I. and 05.J. Personal fall arrest systems are required when working from an articulating or extendible boom, swing stages, or suspended platform. In addition, personal fall arrest systems may be required when operating other equipment such as scissor lifts if the work platform is capable of being positioned outside the wheelbase. Fall protection must comply with 29 CFR 1926.500, Subpart M and USACE EM 385-1-1.

3.3.2.1 Personal Fall Arrest Equipment

Personal fall arrest equipment, systems, subsystems, and components shall meet ANSI Z359.1. Only a full-body harness with a shock-absorbing lanyard or self-retracting lanyard is an acceptable personal fall arrest device. Body belts may only be used as a positioning device system (for uses such as steel reinforcing assembly and in addition to an approved fall arrest system). Harnesses shall have a fall arrest attachment affixed to the body support (usually a Dorsal D-ring) and specifically designated for attachment to the rest of the system. Only locking snap hooks and carabiners shall be used. Webbing, straps, and ropes shall be made of synthetic fiber. The maximum free fall distance when using fall arrest equipment shall not exceed 6 feet. The total fall distance shall always be taken into consideration when attaching a person to a fall arrest system.

3.3.3 Fall Protection for Roofing Work

Fall protection controls shall be implemented based on the type of roof being constructed and work being performed. The roof area to be accessed shall be evaluated for its structural integrity including weight-bearing capabilities for the projected loading.

Low Sloped Roofs:

(1) For work within 6 feet of an edge, on low-slope roofs, personnel shall be protected from falling by use of personal fall arrest systems, guardrails, or safety nets. [A safety monitoring system is not adequate fall protection and is not authorized.]

(2) For work greater than 6 feet from an edge, warning lines shall be erected and installed in accordance with 29 CFR 1926.500 and USACE EM 385-1-1.

Steep Roofs: Work on steep roofs requires a personal fall arrest system, guardrails with toe-boards, or safety nets. This requirement also includes residential or housing type construction.

3.3.4 Safety Nets

If safety nets are used as the selected fall protection system on the project, they shall be provided at unguarded workplaces, over water, machinery, dangerous operations and leading edge work. Safety nets shall be tested immediately after installation with a drop test of 400 pounds and every six months thereafter.

3.3.5 Existing Anchorage

Existing anchorages, to be used for attachment of personal fall arrest equipment, shall be certified (or re-certified) by a qualified person in accordance with ANSI Z359.1.

3.3.6 Horizontal Lifelines

Horizontal lifelines shall be designed, installed, certified and used under the supervision of a qualified person as part of a complete fall arrest system (29 CFR 1926.500).

3.5 SCAFFOLDING

Employees shall be provided with a safe means of access to the work area on the scaffold. Climbing of any scaffold braces or supports not specifically designed for access is prohibited. Access to scaffold platforms greater than 20 feet in height shall be accessed by use of a scaffold stair system. Vertical ladders commonly provided by scaffold system manufacturers shall not be used for accessing scaffold platforms greater than 20 feet in height. The use of an adequate gate is required. Contractor shall ensure that employees are qualified to perform scaffold erection and dismantling. Do not use scaffold without the capability of supporting at least four times the maximum intended load or without appropriate fall protection as delineated in the accepted fall protection and prevention plan. Stationary scaffolds must be attached to structural building components to safeguard against tipping forward or backward. Special care shall be given to ensure scaffold systems are not overloaded. Side brackets used to extend scaffold platforms on self-supported scaffold systems for the storage of material is prohibited. The first tie-in shall be at the height equal to 4 times the width of the smallest dimension of the scaffold base. Work platforms shall be placed on mud sills. Scaffold or work platform erectors shall have fall protection

during the erection and dismantling of scaffolding or work platforms that are more than six feet. Delineate fall protection requirements when working above six feet or above dangerous operations in the Fall Protection and Prevention (FP&P) Plan and Activity Hazard Analysis (AHA) for the phase of work.

3.6 EQUIPMENT

3.6.1 Material Handling Equipment

Material handling equipment such as forklifts shall not be modified with work platform attachments for supporting employees unless specifically delineated in the manufacturer's printed operating instructions.

The use of hooks on equipment for lifting of material must be in accordance with manufacturer's printed instructions.

Operators of forklifts or power industrial trucks shall be licensed in accordance with OSHA.

3.6.2 Equipment and Mechanized Equipment

Equipment shall be operated by designated qualified operators. Proof of qualifications shall be kept on the project site for review.

Manufacture specifications or owner's manual for the equipment shall be on site and reviewed for additional safety precautions or requirements that are sometimes not identified by OSHA or USACE EM 385-1-1. Such additional safety precautions or requirements shall be incorporated into the AHAs.

Equipment and mechanized equipment shall be inspected in accordance with manufacturer's recommendations for safe operation by a competent person prior to being placed into use.

Daily checks or tests shall be conducted and documented on equipment and mechanized equipment by designated competent persons.

3.7 EXCAVATIONS

The competent person for excavations performed as a result of contract work shall be on-site when excavation work is being performed, and shall inspect, and document the excavations daily prior to entry by workers. The competent person must evaluate all hazards, including atmospheric, that may be associated with the work, and shall have the resources necessary to correct hazards promptly.

3.7.1 Utility Locations

Prior to digging, the appropriate digging permit must be obtained. All underground utilities in the work area must be positively identified by a private utility locating service in addition to any station locating service and coordinated with the station utility department. Any markings made during the utility investigation must be maintained throughout the contract.

3.7.2 Utility Location Verification

The Contractor must physically verify underground utility locations by hand digging using wood or fiberglass handled tools when any adjacent construction work is expected to come within three feet of the underground system. Digging within 2 feet of a known utility must not be performed by means of mechanical equipment; hand digging shall be used. If construction is parallel to an

existing utility the utility shall be exposed by hand digging every 100 feet if parallel within 5 feet of the excavation.

3.7.3 Utilities with Concrete Slabs

Utilities located within concrete slabs or pier decks, bridges, and the like are extremely difficult to identify. The location must be coordinated with station utility departments in addition to a private locating service. Outages on system utilities shall be used in circumstances where concrete chipping, saw cutting, or core drilling is required and utilities are unable to be completely identified.

3.7.4 Shoring Systems

Trench and shoring systems must be identified in the accepted safety plan and AHA. Manufacture tabulated data and specifications or registered engineer tabulated data for shoring or benching systems shall be readily available on site for review. Job-made shoring or shielding shall have the registered professional engineer stamp, specifications, and tabulated data. Extreme care must be used when excavating near direct burial electric underground cables.

3.7.5 Trenching Machinery

Trenching machines with digging chain drives shall be operated only when the spotters/laborers are in plain view of the operator. Operator and spotters/laborers shall be provided training on the hazards of the digging chain drives with emphasis on the distance that needs to be maintained when the digging chain is operating. Documentation of the training shall be kept on file at the project site.

3.8 ELECTRICAL

3.8.1 Conduct of Electrical Work

Underground electrical spaces must be certified safe for entry before entering to conduct work. Cables that will be cut must be positively identified and de-energized prior to performing each cut. Positive cable identification must be made prior to submitting any outage request for electrical systems. Arrangements are to be coordinated with the Contracting Officer and Station Utilities for identification. The Contracting Officer will not accept an outage request until the Contractor satisfactorily documents that the circuits have been clearly identified. Perform all high voltage cable cutting remotely using hydraulic cutting tool. When racking in or live switching of circuit breakers, no additional person other than the switch operator will be allowed in the space during the actual operation. Plan so that work near energized parts is minimized to the fullest extent possible. Use of electrical outages clear of any energized electrical sources is the preferred method. When working in energized substations, only qualified electrical workers shall be permitted to enter. When work requires Contractor to work near energized circuits as defined by the NFPA 70, high voltage personnel must use personal protective equipment that includes, as a minimum, electrical hard hat, safety shoes, insulating gloves with leather protective sleeves, fire retarding shirts, coveralls, face shields, and safety glasses. Insulating blankets, hearing protection, and switching suits may be required, depending on the specific job and as delineated in the Contractor's AHA.

3.8.2 Portable Extension Cords

Portable extension cords shall be sized in accordance with manufacturer ratings for the tool to be powered and protected from damage. All damaged extension cords shall be immediately removed from service. Portable extension cords shall meet the requirements of NFPA 70.

3.9 WORK IN CONFINED SPACES

The Contractor shall comply with the requirements in Section 06.I of USACE EM 385-1-1 and OSHA 29 CFR 1910.146. Any potential for a hazard in the confined space requires a permit system to be used.

Entry Procedures. Prohibit entry into a confined space by personnel for any purpose, including hot work, until the qualified person has conducted appropriate tests to ensure the confined or enclosed space is safe for the work intended and that all potential hazards are controlled or eliminated and documented. (See Section 06.I.05 of USACE EM 385-1-1 for entry procedures). All hazards pertaining to the space shall be reviewed with each employee during review of the AHA.

Forced air ventilation is required for all confined space entry operations and the minimum air exchange requirements must be maintained to ensure exposure to any hazardous atmosphere is kept below its' action level.

Ensure the use of rescue and retrieval devices in confined spaces greater than 5 feet in depth. Conform to Sections 06.I.09, 06.I.10 and 06.I.11 of USACE EM 385-1-1.

Sewer wet wells require continuous atmosphere monitoring with audible alarm for toxic gas detection.

Include training information for employees who will be involved as entrants and attendants for the work. Conform to Section 06.I.06 of USACE EM 385-1-1.

Daily Entry Permit. Post the permit in a conspicuous place close to the confined space entrance.

3.10 HOUSEKEEPING

3.10.1 Clean-Up

All debris in work areas shall be cleaned up daily or more frequently if necessary. Construction debris may be temporarily located in an approved location, however garbage accumulation must be removed each day.

3.10.2 Dust control

In addition to the dust control measures required elsewhere in the contract documents, dry cutting of brick or masonry shall be prohibited. [The Contracting Officer, upon written request by the Contractor, may consider exceptions to this prohibition on a case-by-case basis]. Wet cutting must address control of water run off.

- - End of Section - -

SECTION 01770

CLOSEOUT PROCEDURES

PART 1 GENERAL

The specifications shall be in accordance with the design/build contract.

1.1 SUBMITTALS

Government approval is required for submittals with a "G" designation; submittals not having a "G" designation are for information only or as otherwise designated. When used, a designation following the "G" designation identifies the office that will review the submittal for the Government. The following shall be submitted in accordance with Section 01330 SUBMITTAL PROCEDURES:

SD-10 Operation and Maintenance Data

Equipment/product warranty list:
Submit Data Package in accordance with Section 01781, "Operation and Maintenance Data."

SD-11 Closeout Submittals

As-built drawings; G
List of materials
Equipment/Product Warranty List

1.2 PROJECT RECORD DOCUMENTS

1.2.1 As-Built Drawings

The Contractor shall survey the horizontal and vertical location of all extraction well top-of-casings to within 0.1 feet relative to the station datum. Electrical and communication buried conduit shall be surveyed every 1,000 linear feet and at each change of direction.

1.2.2 List of Materials

Provide a list of materials, including manufacturer and the identifying model, make, or part number. Furnish the list of materials used in the following format:

MATERIALS DESCRIPTION	SPECIFICATION	MANUFACTURER	MODEL/MAKE/PART NUMBER	WHERE USED

1.3 EQUIPMENT/PRODUCT WARRANTIES

1.3.1 Equipment/Product Warranty List

Furnish written warranties for equipment/products furnished under the contract, and prepare a listing of such equipment/products. The

equipment/products list shall state the specification section applicable to the equipment/product, duration of the warranty, start date of the warranty, ending date of the warranty, and the point of contact for fulfillment of the warranty. Execute the full list and deliver to the Contracting Officer prior to final acceptance of the facility. Include the following information in the list:

EQUIPMENT/PRODUCT WARRANTY TAG
Type of Equipment/Product _____
Warranty Period _____ From _____ To _____
Contract No. _____
Inspector's Signature _____ Date Accepted _____
Construction Contractor:
Name: _____ Address: _____
Telephone: _____
Warranty Contact: _____
Name: _____Address: _____
Telephone: _____

1.4 CLEANUP

Leave premises "broom clean." Remove waste and surplus materials, rubbish and construction facilities from the site.

PART 2 PRODUCTS

Not used.

PART 3 EXECUTION

Not used.

- - End of Section - -

OPERATION AND MAINTENANCE MANUAL

PART 1 GENERAL

1.1 SUBMISSION OF OPERATION AND MAINTENANCE (O&M) MANUAL

Submit Operation and Maintenance (O&M) Manual specifically applicable to this contract and a depiction of the equipment, products, and system. Organize and present information in detail to explain O&M requirements of the system, equipment, and components.

1.1.1 Package Quality

Documents must be fully legible. Poor quality copies and material with hole punches obliterating the text or drawings will not be accepted.

1.1.2 Package Content

Address each product, component, and system designated for data package submission.

1.1.3 Changes to Submittals

Manufacturer-originated changes or revisions to submitted data shall be furnished by the Contractor if a component of an item is so affected subsequent to acceptance of the O&M Manual.

1.2 TYPES OF INFORMATION REQUIRED IN O&M MANUAL

1.2.1 Operating Instructions

Include specific instructions, procedures, and illustrations for the following phases of operation:

1.2.1.1 Safety Precautions

List personnel hazards and equipment or product safety precautions for all operating conditions.

1.2.1.2 Operator Prestart

Include procedures required to set up and prepare the system for use.

1.2.1.3 Startup, Shutdown, and Post-Shutdown Procedures

Provide narrative description for Startup, Shutdown and Post-shutdown operating procedures including the control sequence for each procedure.

1.2.1.4 Normal Operations

Provide narrative description of Normal Operating Procedures. Include Control Diagrams with data to explain operation and control of systems and specific equipment.

1.2.1.5 Emergency Operations

Include Emergency Procedures for equipment malfunctions to permit a short period of continued operation or to shut down the equipment to prevent further damage to systems and equipment. Include Emergency Shutdown Instructions for foreseeable contingencies. Provide guidance and procedures for emergency operation including required valve positions, valve locations, and zones or portions of systems controlled.

1.2.1.6 Operator Service Requirements

Include instructions for services to be performed by the operator such as lubrication, adjustment, inspection, and recording gage readings.

1.2.1.7 Environmental Conditions

Include a list of Environmental Conditions (temperature, humidity, and other relevant data) that are best suited for the operation of each product, component or system. Describe conditions under which the item equipment should not be allowed to run.

1.2.2 Preventive Maintenance

Include the following information for preventive and scheduled maintenance to minimize corrective maintenance and repair.

1.2.2.1 Lubrication Data

Include preventative maintenance lubrication data, in addition to instructions for lubrication provided under paragraph titled "Operator Service Requirements":

a. A table showing recommended lubricants for specific temperature ranges and applications.

b. Charts with a schematic diagram of the equipment showing lubrication points, recommended types and grades of lubricants, and capacities.

c. A Lubrication Schedule showing service interval frequency.

1.2.2.2 Preventive Maintenance Plan and Schedule

Include manufacturer's schedule for routine preventive maintenance, inspections, tests and adjustments required to ensure proper and economical operation and to minimize corrective maintenance. Provide manufacturer's projection of preventive maintenance work-hours on a daily, weekly, monthly, and annual basis including craft requirements by type of craft. For periodic calibrations, provide manufacturer's specified frequency and procedures for each separate operation.

1.2.3 Corrective Maintenance (Repair)

Include manufacturer's recommended procedures and instructions for correcting problems and making repairs.

1.2.3.1 Troubleshooting Guides and Diagnostic Techniques

Include step-by-step procedures to promptly isolate the cause of typical malfunctions. Describe why the checkout is performed and what conditions are to be sought. Identify tests or inspections and test equipment required to determine whether parts and equipment may be reused or require replacement.

1.2.3.2 Wiring Diagrams and Control Diagrams

Wiring diagrams and control diagrams shall be point-to-point drawings of wiring and control circuits including factory-field interfaces. Provide a complete and accurate depiction of the actual job specific wiring and control work. On diagrams, number electrical and electronic wiring and pneumatic control tubing and the terminals for each type, identically to actual installation configuration and numbering.

1.2.3.3 Maintenance and Repair Procedures

Include instructions and a list of tools required to repair or restore the product or equipment to proper condition or operating standards.

1.2.3.4 Removal and Replacement Instructions

Include step-by-step procedures and a list required tools and supplies for removal, replacement, disassembly, and assembly of components, assemblies, subassemblies, accessories, and attachments. Provide tolerances, dimensions, settings and adjustments required. Instructions shall include a combination of text and illustrations.

1.2.3.5 Spare Parts and Supply Lists

Include lists of spare parts and supplies required for maintenance and repair to ensure continued service or operation without unreasonable delays. Special consideration is required for facilities at remote locations. List spare parts and supplies that have a long lead-time.

1.2.4 Corrective Maintenance Work-Hours

Include manufacturer's projection of corrective maintenance work-hours including requirements by type of craft. Corrective maintenance that requires completion or participation of the equipment manufacturer shall be identified and tabulated separately.

1.2.5 Appendices

Provide information required below and information not specified in the preceding paragraphs but pertinent to the maintenance or operation of the product or equipment. Include the following:

1.2.6 Parts Identification

Provide identification and coverage for all parts of each component, assembly, subassembly, and accessory of the end items subject to replacement. Include special hardware requirements, such as requirement to use high-strength bolts and nuts. Identify parts by make, model, serial number, and source of supply to allow reordering without further identification. Provide clear and legible illustrations, drawings, and exploded views to enable easy identification of the items. When illustrations omit the part numbers and description, both the illustrations and separate listing shall show the

index, reference, or key number that will cross-reference the illustrated part to the listed part. Parts shown in the listings shall be grouped by components, assemblies, and subassemblies in accordance with the manufacturer's standard practice. Parts data may cover more than one model or series of equipment, components, assemblies, subassemblies, attachments, or accessories, such as typically shown in a master parts catalog

1.2.6.1 Warranty Information

List and explain the various warranties and include the servicing and technical precautions prescribed by the manufacturers or contract documents in order to keep warranties in force. Include warranty information for primary components.

1.2.6.2 Personnel Training Requirements

Provide information available from the manufacturers that is needed for use in training designated personnel to properly operate and maintain the equipment and systems.

1.2.6.3 Testing Equipment and Special Tool Information

Include information on any test equipment required to perform any specified tests and on any special tools needed for the operation, maintenance, and repair of components.

1.2.6.4 Contractor Information

Provide a list that includes the name, address, and telephone number of the Contractor and each Subcontractor who installed the product or equipment, or system. For each item, also provide the name address and telephone number of the manufacturer's representative and service organization most convenient to the project site. Provide the name, address, and telephone number of the product, equipment, and system manufacturers.

PART 2 PRODUCTS

Not used.

PART 3 EXECUTION

Not used.

TRANSPORTATION AND DISPOSAL OF REMEDIATION DERIVED WASTES

PART 1 GENERAL

1.1 REFERENCES

The publications listed below form a part of this specification to the extent referenced. The publications are referred to in the text by basic designation only.

U.S. NATIONAL ARCHIVES AND RECORDS ADMINISTRATION (NARA)

40 CFR 61	National Emission Standards for Hazardous Air Pollutants
40 CFR 261 & 22 CCR 66261	Identification and Listing of Hazardous Waste
40 CFR 262 & CCR 66262	Standards Applicable to Generators of Hazardous 22 Waste
40 CFR 263 & 22 CCR 66263	Standards Applicable to Transporters of Hazardous Waste
40 CFR 266	Standards for the Management of Specific Hazardous Wastes and Specific Types of Hazardous Waste Management Facilities
40 CFR 268 & 22 CCR 66268	Land Disposal Restrictions
40 CFR 270	EPA Administered Permit Programs: The Hazardous Waste Permit Program
40 CFR 279	Standards for the Management of Used Oil
40 CFR 300	National Oil and Hazardous Substances Pollution Contingency Plan
40 CFR 302	Designation, Reportable Quantities, and Notification
40 CFR 761	Polychlorinated Biphenyls (PCBs) Manufacturing, Processing, Distribution in Commerce, and Use Prohibitions
49 CFR 107	Hazardous Materials Program Procedures
49 CFR 172	Hazardous Materials Table, Special Provisions, Hazardous Materials Communications, Emergency Response Information, and Training Requirements
49 CFR 173	Shippers - General Requirements for Shipments and Packagings
49 CFR 178	Specifications for Packagings

SW 846 Test Method for Evaluating Solid Wastes Physical Chemical Methods

1.2 SUBMITTALS

The following will be submitted in accordance with Section 01330 SUBMITTAL PROCEDURES:

SD-01 Preconstruction Submittals

Waste Management Plan, as a section in the Remedial Action Plan; G

SD-06 Test Reports

Spill Response;

In the event of a spill or release of a remediation derived waste substance (as designated in 40 CFR 302), or pollutant or contaminant, notify the Contracting Officer immediately. If the spill exceeds a reporting threshold, follow the pre-established procedures for immediate reporting to the Contracting Officer.

Exception Reports;

In the event that a manifest copy documenting receipt of hazardous waste at the treatment, storage, and disposal facility is not received within 35 days of shipment initiation, the Contracting Officer will prepare and submit an exception report.

SD-07 Certificates

Qualifications;

Copies of the current certificates of registration issued to the Contractor and/or subcontractors or written statements certifying exemption from these requirements, if any.

EPA Off-Site Policy;

A letter certifying that EPA considers the facilities to be used for all off-site disposal to be acceptable in accordance with the Off-Site policy in 40 CFR 300, Section .440. This certification will be provided for wastes from Resource Conservation and Recovery Act (RCRA), 42 U.S.C. 6901 et seq., sites as well as from Comprehensive Environmental Response Compensation and Liability Act (CERCLA), 42 U.S.C. 9601 et seq., responses.

Shipping/Disposal Documents and Packaging Certifications; G,

All transportation related shipping documents to the Contracting Officer, including draft hazardous waste manifests, draft bill of ladings, draft land disposal restriction notifications, lists of corresponding proposed labels, packages, waste profiles,

supporting waste analysis documents, for review a minimum of 5 days prior to anticipated pickup.

If the remediation derived wastes are determined to be non-hazardous wastes, other applicable federal, state, or local requirements for packaging, marking, labeling, placarding, and spill response materials will be complied with.

1.3 LAWS AND REGULATIONS REQUIREMENTS

Work will meet or exceed the minimum requirements established by Federal, state, and local laws and regulations which are applicable. These requirements are amended frequently and the Contractor will be responsible for complying with amendments as they become effective. In the event that compliance exceeds the scope of work or conflicts with specific requirements of the contract, notify the Contracting Officer immediately.

PART 2 PRODUCTS

2.1 MATERIALS

Materials required for the packaging, labeling, marking, placards, and transportation of remediation derived wastes will be in conformance with Department of Transportation standards.

2.1.1 Packaging

Bulk and non-bulk containers for packaging hazardous materials/wastes will be consistent with the authorizations referenced in the Hazardous Materials Table in 49 CFR 172, Section 101, Column 8.
Packaging will meet the corresponding specifications in 49 CFR 173 referenced in the Hazardous Materials Table, 49 CFR 172, Section 101. Each packaging will conform to the general packaging requirements of Subpart B of 49 CFR 173, to the requirements of 49 CFR 178 at the specified packing group performance level, to the requirements of special provisions of column 7 of the Hazardous Materials Table in 49 CFR 172, Section 101, and will be compatible with the material to be packaged as required by 40 CFR 262 & 22 CCR 66262. Sorbent materials will not be capable of reacting dangerously with, being decomposed by, or being ignited by the hazardous materials being packaged. Additionally, sorbents used to treat free liquids to be disposed of in landfills will be non-biodegradable as specified in 40 CFR 264 & 22 CCR 66264, Section 314.

2.1.2 Markings

Markings for each hazardous material/waste package, freight container, and transport vehicle will be consistent with the requirements of 49 CFR 172, Subpart D and 40 CFR 262 & 22 CCR 66262, Section 32 (for hazardous waste). Markings will be capable of withstanding, without deterioration or substantial color change, a 180 day exposure to conditions reasonably expected to be encountered during container storage and transportation.

2.1.3 Labeling

Primary and subsidiary labels for hazardous materials/wastes will be consistent with the requirements in the Hazardous Materials Table in 49 CFR 172, Section 101, Column 6. Labels will meet design specifications required

by 49 CFR 172, Subpart E including size, shape, color, printing, and symbol requirements. Labels will be durable and weather resistant and capable of withstanding, without deterioration or substantial color change, a 180 day exposure to conditions reasonably expected to be encountered during container storage and transportation.

2.1.4 Placards

For each off-site shipment of hazardous material/waste, transportation subcontractor will provide primary and subsidiary placards consistent with the requirements of 49 CFR 172, Subpart F. Placards will be provided for each side and each end of bulk packaging, freight containers, transport vehicles, and rail cars requiring such placarding. Placards may be plastic, metal, or other material capable of withstanding, without deterioration, a 30 day exposure to open weather conditions and will meet design requirements specified in 49 CFR 172, Subpart F.

2.1.5 Spill Response Materials

Spill response materials will be available at all times where hazardous materials/wastes are handled or transported. Spill response materials will be compatible with the type of material being handled.

2.2 EQUIPMENT AND TOOLS

Miscellaneous equipment and tools will be available as necessary to handle remediation derived wastes in a safe and environmentally sound manner.

PART 3 EXECUTION

3.1 REMEDIATION DERIVED WASTE MANAGEMENT PLAN

3.1.1 On-Site Remediation Derived Waste Management

Ensure compliance with all Federal, state, and local hazardous and solid waste laws and regulations and verify those requirements when preparing reports, waste shipment records, hazardous waste manifests, or other documents. The Contractor will identify remediation-derived wastes such as soil cuttings, well development, purged groundwater, spoils from trenching, decontamination water using criteria set forth in 40 CFR 261 & 22 CCR 66261, and all applicable state and local laws, regulations, and ordinances.

Analytical samples from the remediation-derived wastes will be collected in accordance with EPA-recommended methods described in "Test Methods for Evaluating Solid Waste Physical/Chemical Methods"- SW 846 and as reiterated in the Sampling and Analyses Plan.

For the hazardous waste determination of personal protective equipment (PPE) and disposal equipment (DE), the determination may be made based on available information and professional judgment. When accumulating hazardous remediation-derived waste on-site, the Contractor will comply with generator requirements in 40 CFR 262 & 22 CCR 66262, and any applicable state or local law or regulations. On-site accumulation time will be restricted to 90 days for hazardous remediation-derived wastes.

Accumulation start dates will commence when waste is first generated (i.e. containerized or otherwise collected for discard). Use only containers in

good condition and compatible with the waste to be stored. The Contractor will be responsible for ensuring containers are closed except when adding or removing waste. The Contractor will be responsible for marking all hazardous remediation derived waste containers with the appropriate words as required by 40 CFR 262 & 22 CCR 66262, Section 32 as soon as the waste is containerized. In addition marking will be placed on containers of "unknowns" designating the date sampled, and the suspected hazard. The Contractor will be responsible for inspecting containers for signs of deterioration and will be responsible for responding to any spills or leaks.

3.1.2 Waste Management Plan

The Waste Management Plan is provided in Section 3 of the Remedial Action Work Plan.

3.2 OFF-SITE REMEDIATION DERIVED WASTE MANAGEMENT

Use RCRA Subtitle C permitted facilities which meet the requirements of 40 CFR 264 & 22 CCR 66264 or facilities operating under interim status which meet the requirements of 40 CFR 265 & 22 CCR 66265 if the remediation derived waste is identified as hazardous. If the remediation-derived waste is determined to be non-hazardous, RCRA nonhazardous facilities that are in compliance with 42 U.S.C. 9621 (d)(3) and other applicable federal, state or local regulations will be used. Off-site treatment, storage, and/or disposal facilities with significant RCRA violations or compliance problems (such as facilities known to be releasing hazardous constituents into ground water, surface water, soil, or air) will not be used.

3.2.1 Description of TSD Facility and Transporter

Provide the Contracting Officer with EPA ID numbers, names, locations, and telephone numbers of TSD facilities and transporters. A list of proposed TSD facilities for the project will be provided to the Contracting Officer.

3.2.2 Status of the Facility

Facilities receiving hazardous waste must be permitted in accordance with 40 CFR 270 or operating under interim status in accordance with 40 CFR 265 & 22 CCR 66265 requirements, or must be permitted by an authorized state program. Additionally, prior to using a TSD Facility, the Contractor will contact the EPA Regional Off-site Coordinator specified in 40 CFR 300, Section .440, to determine the facility's status, and document all information necessary to satisfy the requirements of the EPA Off-Site policy and furnish this information to the Contracting Officer.

3.2.3 Shipping Documents and Packagings Certification

Prior to shipment of any remediation derived waste material off-site, the Contractor will ensure that remediation derived waste materials have been properly packaged, labeled, and marked in accordance with Department of Transportation and EPA requirements.

3.2.4 Transportation

Use manifests for transporting hazardous remediation wastes as required by 40 CFR 263 & 22 CCR 66263 or other relevant documents as per applicable federal or state or local laws or regulation s. Transportation will comply with

requirements in the Department of Transportation referenced regulations in the 49 CFR series. Obtain manifests if required in accordance with the hierarchy established in 40 CFR 262 & 22 CCR 66262, Section 21. Prepare hazardous waste manifests for each shipment of hazardous waste shipped off-site. Manifests will be completed using instructions in 40 CFR 262 & 22 CCR 66262, Subpart B and any applicable state or local law or regulation. Manifests and waste profiles will be submitted to Contracting Officer for review and approval. Land disposal restriction notifications will be completed as required by 40 CFR 268 & 22 CCR 66268 or any applicable state or local law or regulation for each shipment of remediation derived waste. The land disposal restriction notifications will be submitted with the manifest to the Contracting Officer for review and approval.

3.2.5 Treatment and Disposal of Remediation Derived Wastes

Hazardous remediation derived waste will be transported to an approved waste treatment, storage, or disposal facility within 90 days of the accumulation start date, as listed on each container. Ship the hazardous remediation derived wastes only to facilities which are properly permitted to accept the waste or are operating under interim status. Ensure wastes are treated to meet land disposal treatment standards in 40 CFR 268 & 22 CCR 66268 prior to land disposal in case of hazardous remediation derived wastes. Provide a list of proposed TSD facilities to the Contracting Officer.

3.3 REMEDIATION DERIVED WASTE MATERIALS MANAGEMENT

3.3.1 Identification of Proper Shipping Names

Use 49 CFR 172, Section .101 or applicable federal or state or local laws and regulations to identify proper shipping names for each remediation derived waste material to be shipped off-site. Proper shipping names will be submitted to the Contracting Officer in the form of draft shipping documents for review and approval.

3.3.2 Packaging, Labeling, and Marking

Package, label, and mark remediation derived wastes using the specified materials and in accordance with the referenced authorizations.

3.3.3 Shipping Documents

Ensure that each shipment of remediation derived waste sent off-site is accompanied by properly completed shipping documents.

3.6 WASTE MINIMIZATION

Minimize the generation of remediation derived waste to the maximum extent practicable. Take all necessary precautions to avoid mixing clean and contaminated wastes.

3.7 RECORDKEEPING

Maintaining adequate records to support information provided to the Contracting Officer regarding transportation, treatment, storage or disposal of wastes, exception reports annual reports, and biennial reports.

3.8 SPILL RESPONSE

Respond to any spill of remediation derived waste which is in the custody or care of the Contractor, pursuant to the contract. Comply with all applicable requirements of Federal, state, or local laws or regulations regarding any spill incident.

3.9 EMERGENCY CONTACTS

Comply with the emergency contact provisions in 49 CFR 172, Section .604 or applicable federal or state or local laws and regulations. Whenever hazardous remediation derived waste materials are shipped, provide a 24 hr emergency response contact and phone number of a person knowledgeable about the hazardous remediation derived waste materials being shipped and who has comprehensive emergency response and incident mitigation information for that material, or has immediate access to a person who possesses such knowledge and information. The phone must be monitored on a 24 hour basis at all times when the hazardous remediation derived waste materials are in transportation, including during storage incidental to transportation. Ensure that information regarding this emergency contact and phone number are placed on all hazardous remediation derived waste material shipping documents. The Contractor Officer will designate an emergency coordinator. The emergency coordinator and contact information will be posted at areas in which hazardous remediation derived waste are managed:

1. The name of the emergency coordinator.

2. Phone number through which the emergency coordinator can be contacted on a 24 hour basis.

3. The telephone number of the local fire department.

4. The location of fire extinguishers and spill control materials.

3.10 NOTICES OF NON-COMPLIANCE AND NOTICES OF VIOLATION

Immediately provide copies of all non-compliance or notices of violation issued from a Federal, state, or local regulatory agency notices to the Contracting Officer. Furnish all relevant documents regarding the incident and any information requested by the Contracting Officer, and coordinate the response to the notice with the Contracting Officer prior to submission to the notifying authority. Furnish a copy to the authority, including the final reply to the notice, and all other materials, until the matter is resolved.

SECTION 02222

EXCAVATION, TRENCHING, AND BACKFILL

PART 1 GENERAL

1.1 REFERENCES

The publications listed below form a part of this specification to the extent referenced. The publications are referred to within the text by the basic designation only.

AMERICAN SOCIETY FOR TESTING AND MATERIALS (ASTM)

ASTM C 136	Sieve Analysis of Fine and Coarse Aggregates
ASTM D 422	Particle-Size Analysis of Soils
ASTM D 698	Laboratory Compaction Characteristics of Soil Using Standard Effort (12,400 ft-lbf/cu. ft).
ASTM D 1140	Amount of Material in Soils Finer than the No. 200 Sieve
ASTM D 1557	Laboratory Compaction Characteristics of Soil Using Modified Effort (56,000 ft-lbf/ft3).
ASTM D 2487	Classification of Soils for Engineering Purposes (Unified Soil Classification System)
ASTM D 2922	Density of Soil and Soil-Aggregate in Place by Nuclear Methods (Shallow Depth)
ASTM D 3017	Water Content of Soil and Rock in Place by Nuclear Methods (Shallow Depth)

U.S. ARMY CORPS OF ENGINEERS (USACE)

EM 385-1-1	U.S. Army Corps of Engineers Safety and Health Requirements Manual

1.2 DEFINITIONS

1.2.1 Satisfactory Materials

Satisfactory materials shall be that material obtained from required contract excavation that have a maximum particle size less than 3 inches, and are free of excess moisture, organic matter, debris, and contamination.

1.2.2 Unsatisfactory Materials

Unsatisfactory materials are those that are contaminated, or contain excess moisture, organic matters, roots, trash, debris, or cobbles.

1.2.3 Unyeilding Materials

Unyeilding materials shall consist of rock and gravelly soils with stones greater than 1 inch in any dimension or as defined by the pipe manufacturer, whichever is smaller.

1.2.4 Unstable Materials

Unstable materials shall consist of materials too wet to properly support the pipe, conduit, or appurtenant structure.

1.2.5 Degree of Compaction

Degree of compaction required is expressed as a percentage of the maximum density obtained by the test procedure presented in ASTM D 698 (Standard Effort) and ASTM D 1557 (Modified Effort).

1.2.6 Class IA Manufactured Aggregate

Manufactured aggregate, angular, open-graded and clean. Includes crushed stone, as described in ASTM D-2488 Standard Unified Soil Classification System.

1.3 SUBMITTALS

The following shall be submitted in accordance with Section 01300:

SD-06 Test Reports

(1) Gradation of Class IA materials ASTM D 422
(2) Laboratory compaction tests ASTM D 698 (Standard Effort) and ASTM D 1557 (Modified Effort)
(3) Field Density Tests by Nuclear Methods, ASTM D 2922, copies of all laboratory and field test reports. Submit with daily report within 24 hours of completion of tests.

1.4 Subsurface Soils Investigations

Information regarding subsurface soil investigations and borings shall be provided by the Government.

PART 2 PRODUCTS

2.1 Pipe Bedding, Haunching, Primary Initial Backfill, and Secondary Initial Backfill

Pipe bedding, haunching, initial backfill, and secondary backfill material shall consist of well-graded crushed stone, Class IA or Class IB per ASTM D 2321. The maximum allowable aggregate size shall be as shown below:

Nominal Pipe Size (inches)	Maximum Particle Size (inches)
2 to 4	1/2
6 to 8	3/4
10 to 16	1

Gradation shall be as listed below:

Gradation for 3/4-inch crushed aggregate shall be as follows

Sieve Size	Percent Passing (%)
1-inch	100
3/4-inch	82
1/2-inch	18
3/8-inch	3
#4	3
#8	1

Gradation of `1/2-inch crushed aggregate shall be as follows:

Sieve Size	Percent Passing (%)
3/4-inch	100
1/2-inch	89
3/8-inch	52
#4	2
#8	1

2.3 Final Backfill Material

Final backfill material shall be native soil excavated during trenching and meeting the requirements of satisfactory material.

2.4 Imported Soils

Imported soils will not be used for this project.

2.5 Plastic Marking Tape for Non-Metallic Piping and Conduit

Warning tape to be placed 18 inches below grade and above the utility line to be marked. Tape shall be of polyethylene plastic with metallic core or metallic-faced, acid- and alkali-resistant, polyethylene plastic warning tape manufactured specifically for warning and identification of buried utility lines. Provide tape on rolls, 3 inch minimum width, color coded as specified below for the intended utility with warning and identification imprinted in bold black letters continuously over the entire tape length. Warning and identification to read, "CAUTION, BURIED (intended service) LINE BELOW" or similar wording. Color and printing shall be permanent, unaffected by moisture or soil.

Warning Tape Color Codes

Red:	Electric
Yellow:	Gas, Oil, Dangerous Material
Orange:	Communications
Green:	Storm sewer

PART 3 EXECUTION

3.1 EXCAVATION

3.1.1 Underground utilities shall be located and marked before the start of excavation work.

3.1.2 Excavation shall be performed to the lines and grades indicated. During excavation, material satisfactory for backfilling shall be stockpiled in an orderly manner at a distance from the banks of the trench equal to one-half the depth of the excavation, but in no instance closer than 2 feet. Grading shall be done as may be necessary to prevent surface water from flowing into the excavation, and any water accumulating therein shall be removed to maintain the stability of the bottom and sides of the excavation.

3.1.3 Trench Excavation

3.1.3.1 Pipe and Conduit Trenches

All trenches will be evaluated by a Competent Person, as defined in Title 8 of the California Code of Regulations, for stability and will be evaluated for shoring or sloping measures required to ensure protection of workers. All trenches into which workers may enter will be inspected by the Competent Person, regardless of trench depth. Prior to entry of the trench by workers, the Competent Person must evaluate the potential for cave-in, and ensure that shoring/sloping/shielding is installed, if necessary, to prevent cave-in.

The trench shall be excavated to the line and grade shown on the Drawings. Trench walls below the top of the pipe shall be sloped, or made vertical, and of to width shown on the Drawings.

3.1.3.2 Bottom Preparation for Pipe and Conduit Trenches

The bottoms of trenches shall provide a uniform bearing and support for the bottom of each section of the pipe.

3.1.3.3 Removal of Unyielding Material

Where unyielding material is encountered in the bottom of the trench, such material may be removed and replaced with suitable materials.

3.1.3.4 Removal of Unstable Material

Remove unstable material where encountered in the bottom of trenches. Replace to the proper grade with select granular material.

3.1.3.5 Excavation for Well Vaults and Similar Structures

Excavation for well vaults and structures shall be sufficient to leave at sufficient clearance between the outer structure surfaces and the face of the excavation or support members. When pre-cast concrete is to be placed in an excavated area, special care shall be taken not to disturb the bottom of the excavation.

3.1.3.6 Stockpiles

Stockpiles of satisfactory material shall be placed and graded as specified. Stockpiles shall be kept in a meat and well-drained condition.

3.1.3.7 Underground Utilities

Support uncovered utility lines or other existing work affected by the contract excavation.

3.1.4 Structural Excavation

Excavate to the lines and grades indicated. Ensure that footing subgrades have been inspected and approved by the Contracting Officer prior to concrete placement. Finished subgrade tolerance under concrete structures shall be +0.00 feet to -0.10 feet.

3.1.5 Contaminated Soil Excavation

Notify the Contracting Officer if contaminated soil is encountered. Segregate, stockpile, and cover the soil until further direction is received from the Contracting Officer.

3.2 UTILIZATION OF EXCAVATED MATERIALS

Satisfactory material removed from excavations shall be used, insofar as practicable, in the construction of trench backfill and for similar purposes. Unsatisfactory materials, except for contaminated soils, shall be spread evenly, and graded to match existing grade, in areas adjacent to the trenches.

3.3 BURIED TAPE AND DETECTION WIRE

Buried warning tape shall be placed 18 inches below grade and above the corresponding utility line, or to the depth shown on drawings. Install warning tape only for pipe installed for contract. Tape will not be installed for existing utilities.

3.4 BACKFILLING AND COMPACTION

3.4.1 Trench Backfill

Final trench backfill shall consist of satisfactory excavated native material. Backfill shall be placed in 12 inch loose lifts, when using other than hand-operated equipment. For hand-operated equipment, lifts may be in 6 to 9 inches. Trenches shall be backfilled to the match the existing grade. For all areas other than crossing Perimeter Road, Marine Way, or the access road to the compound, each layer shall be compacted to 90% of maximum dry density as determined by ASTM D 698 (Standard Effort). For trenches crossing Perimeter Road, Marine Way, the access road to the compound, or as indicated on the Drawings, compact to 90% using ASTM D 1557 (Modified Effort).

Backfill that is adjacent to structures shall be placed and compacted to the requirements shown on the drawings.

3.4.2 Replacement of Unyielding Material

Unyielding material removed from the bottom of the trench shall be replaced with select granular material or initial backfill material.

3.4.3 Replacement of Unstable Material

Unstable material removed from the bottom of the trench or excavation shall be replaced with select granular material placed in layers not exceeding 6 inches loose thickness.

3.4.4 Bedding, Haunching, and Initial Backfill

Bedding shall be of the type and thickness shown. Haunching and initial backfill material shall be placed and compacted with approved tampers to a height of at least one foot above the pipe or conduit. The backfill shall be brought up evenly on both sides of the pipe for the full length of the pipe. Care shall be taken to ensure thorough compaction of the fill under the haunches of the pipe. Provide bedding for buried piping in accordance with drawings and as described in Paragraph 2.1 of Specification 02222, unless otherwise specified herein. Initial backfill to top of pipe shall be compacted as shown on the drawings.

Bedding material shall be a well-mixed blend of processed aggregate, free of deleterious substances, consisting of either crushed rock or natural sands and gravels conforming to the gradation shown on the drawings and no larger than as recommended by the pipe manufacturer.

3.4.5 Final Backfill

The remainder of the trench, except for special materials for roadways, shall be filled with satisfactory excavated native material. Backfill material shall be placed and compacted as follows:

Perimeter Road: Backfill shall be placed up to the required elevation as shown on the drawings. Asphalt shall be replaced to match the existing roadway.

Sidewalks, Turfed or Seeded Areas, Miscellaneous Areas, and Former Runways and Taxiways: Backfill shall be deposited in layers of a maximum of 12 inch loose thickness, and compacted to 90 percent maximum density determined by ASTM D 698 (Standard Effort), ASTM D 2922, and ASTM D 3017. Compaction by water flooding or jetting will not be permitted. This requirement shall also apply to all other areas not specifically designated above.

3.4.6 Backfill for Well Vaults and Clean-Out Vaults

After the well vault (or similar structure) has been placed, backfill shall be placed in such a manner that the structure will not be damaged by the shock of falling earth. The backfill material shall be deposited and compacted as shown on the drawings for final backfill, and shall be brought up evenly on all sides of the structure to prevent eccentric loading and excessive stress.

3.5 SUBGRADE PREPARATION

3.5.1 Proof Rolling

Proof rolling shall be done where indicated on the drawings for exposed subgrade free of surface water (wet conditions resulting from rainfall), which would promote degradation of an otherwise acceptable subgrade. After stripping, proof roll the existing subgrade of the transfer compound with six passes of a 15 ton, pneumatic-tired roller. Operate the roller in a systematic manner to ensure the number of passes over all areas, and at speeds between 2 1/2 to 3 1/2 mph. When proof rolling, one-half of the passes made with the roller shall be in a direction perpendicular to the other passes. Notify the Contracting Officer a minimum of 3 days prior to proof rolling. Proof rolling shall be performed in the presence of the Contracting Officer. Rutting or pumping of material shall be undercut as directed by the Contracting Officer and replaced with select material.

3.5.2 Construction

Subgrade shall be shaped to line, grade, and cross section, and compacted as specified. This operation shall include plowing, disking, and any moistening or aerating required to obtain the compaction shown on the drawings. Soft or otherwise unsatisfactory material shall be removed and replaced with satisfactory excavated material or other approved material as directed. Rock encountered in the cut section shall be excavated to a depth of 6 inches below finished grade for the subgrade. Low areas resulting from removal of unsatisfactory material or excavation of rock shall be brought up to required grade with satisfactory materials, and the entire subgrade shall be shaped to line, grade, and cross section and compacted as specified. The elevation of the finish subgrade shall not vary more than 0.05 foot from the established grade and cross section.

3.5.3 Compaction

Compaction shall be accomplished by sheepsfoot rollers, pneumatic-tired rollers, steel-wheeled rollers, vibratory compactors, or other approved equipment. Testing will be performed via ASTM D 2922 and ASTM 3017 to document that required compaction has been achieved.

3.5.4 Finishing

Subgrades and trenches shall be finished to a smooth and compact surface. Subgrades will be finished in accordance with the lines, grades, and cross sections or elevations shown. Trenches will be finished to match existing grades.

3.5.4.1 Subgrade

Excavations shall be kept shaped and drained. The finished subgrade shall not be disturbed by traffic or other operation and shall be protected and maintained until subbase, base, or pavement is placed. The storage or stockpiling of materials on the finished subgrade will not be permitted. No subbase, base course, or pavement shall be laid until the subgrade has been checked and approved, and in no case shall subbase, base, surfacing, or pavement, be placed on a muddy, or spongy subgrade.

3.6 TESTING

Testing shall be performed by an approved commercial testing laboratory. Tests on recompacted areas shall be performed to determine conformance with specification requirements.

3.6.1 Fill and Backfill Material Gradation

Gradation of structural fill and backfill material shall be determined in accordance with ASTM C 136, ASTM D 422, or ASTM D 1140 as applicable.

3.6.2 In-Place Densities

Field in-place density shall be determined in accordance with ASTM D 2922

One test per 1000 square feet, or fraction thereof, of each lift of fill or backfill areas compacted by other than hand-operated machines.

One test per 1000 square feet, or fraction thereof, of each lift of fill or backfill areas compacted by hand-operated machines.

3.6.3 Moisture Contents

In the stockpile areas for backfill and structural fill, a minimum of one tests per type of material or source of material being placed during stable weather conditions shall be performed in accordance with ASTM D 3017.

3.6.4 Laboratory Characteristic of Soil

Tests shall be made in accordance with ASTM D 1557 or ASTM D 698, as required, for each type material or source of material to determine the optimum moisture and laboratory maximum density values. Field test reports shall be submitted with the daily report.

3.7 DISPOSITION OF SURPLUS MATERIAL

Surplus material shall be stockpiled on-site in the area designated by the Contracting Officer and as agreed to by the Contractor.

---End of Section---

SECTION 02525

WELL CONSTRUCTION

PART 1 GENERAL

1.1 REFERENCES

The publications listed below form a part of this specification to the extent referenced. The publications are referred to within the text by the basic designation only.

AMERICAN SOCIETY FOR TESTING AND MATERIALS (ASTM)

ASTM A 312/A 312M	Seamless and Welded Austenitic Stainless Steel Pipes
ASTM C 117	Materials Finer than 75-Micrometer (No. 200) sieve in Mineral Aggregates by Washing
ASTM C 136	Sieve Analysis of Fine and Coarse Aggregates
ASTM C 150	Portland Cement
ASTM D 2487	Classification of Soils for Engineering Purposes (Unified Soil Classification System)
ASTM D 2488	Description and Identification of Soils (Visual-Manual Procedure)
ASTM D 4397	Polyethylene Sheeting for Construction, Industrial, and Agricultural Applications
ASTM D 5088	Decontamination of Field Equipment Used at Nonradioactive Waste Sites
ASTM D 5092	Design and Installation of Ground Water Monitoring Wells in Aquifers
ASTM F 883	Padlocks

U.S. NATIONAL ARCHIVES AND RECORDS ADMINISTRATION (NARA)

29 CFR 1910	Occupational Safety and Health Standards

U.S. ARMY CORPS OF ENGINEERS (USACE)

EM 385-1-1	Safety and Health Requirements Manual

U.S. ENVIRONMENTAL PROTECTION AGENCY (EPA)

EPA 600-4-89-034	Handbook of Suggested Practices for the Design and Installation of Groundwater Monitoring Wells
EPA 600/4-79/020	Contaminant Monitoring

1.2 DESCRIPTION OF WORK

Provide groundwater extraction wells including drilling, casing, well screen, gravel packing, grouting, development, monitoring device, and incidental related work complete and ready for operation.

1.3 GENERAL REQUIREMENTS

Equipment, materials, installation, and performance, shall be in accordance with local, State, and Federal regulations, ASTM D 5092, and EPA 600-4-89-034 except as modified herein. Mark and secure extraction wells to avoid unauthorized access and tampering.

1.4 SUBMITTALS

Submit the following in accordance with Section 1330, "Submittal Procedures."

SD-02 Shop Drawings

Well construction diagrams to be submitted by WESTON with the Design Submittal

SD-03 Product Data

Well casing
Well screen
Filter pack
Neat cement grout
Bentonite seal
Dry calcium hypochlorite, liquid sodium hypochlorite (bleach), and other disinfection products

SD-11 Closeout Submittals

Well Construction Logs

1.5 DELIVERY, STORAGE, AND HANDLING

Deliver materials in an undamaged condition. Unload and store with minimal handling. Store materials in on-site enclosures or under protective coverings. Store plastic piping, joining materials, and gaskets under cover out of direct sunlight. Store materials off the ground. Keep insides of pipes and fittings free of dirt and debris. Replace defective or damaged materials with new materials.

1.6 QUALITY ASSURANCE

1.6.1 Required Drawings

Submit well construction drawings showing components and details of well casing, well screen, filter pack, annular seal, and associated items. Drawings shall be prepared under the supervision of State certified professional geologist or hydrogeologist, or under the supervision of State registered professional civil engineer.

1.6.2 Health and Safety

Follow the safety precautions listed in the Health and Safety Plan (appendix to the Remedial Action Work Plan) for each phase of the project as specifically related to handling of soil and water removed during well

drilling and development operations. Provide MSDS for all hazardous materials brought onto the site (e.g., disinfection products).

1.6.3 Field Sampling and Laboratory Tests

Follow field sampling methods and quality control procedures as described in the Sampling and Analysis Plan, located in an appendix of the Remedial Action Workplan.

1.6.4 Well Development Report

Provide report, containing the following data for each well: project name and location, well designation, date and time of well installation, date and time of well development, static water level from top of well casing before development and 24 hours after development, field measurements of pH, temperature, and specific conductivity, depth of well from top of casing to bottom of well, screen length, description of development methodology size/capacity of pump or bailer, pumping rate, and recharge rate.

PART 2 PRODUCTS

2.1 WELL CASING
2.1.1 Stainless Steel Piping

ASTM A 312/A 312M, Type 316, Schedule 40S, with flush threaded joint end fittings. Threaded joints shall be provided with nitrile O-ring gaskets.

2.2 WELL SCREEN

Well screens shall be located as indicated. The length of screen shall be as indicated. Slot size shall be 0.035 inch. Slotted openings shall be distributed uniformly around the circumference of the screen. Open area shall approach the formation's natural porosity.

2.2.1 Stainless Steel Screens

ASTM A 312/A 312M, Type 316, Schedule 40S, continuous slot construction, wire wound, with flush threaded joint ends.

2.3 WATER

Water used for drilling, grout mixtures, or concrete mixtures shall be free of bacterial or chemical contamination. Record water source location and volumes used.

2.4 PRIMARY FILTER PACK

Provide clean, durable, well-rounded, and washed quartz or granite, with less than 5 percent non-siliceous material. The filter pack shall not contain organic matter or friable materials. The filter pack shall allow free flow of water into the well, and shall prevent the infiltration of aquifer materials. Filter pack shall have a 30 percent finer than (d-30) grain size of 0.035 inch, and a uniformity coefficient less than 2.5, in accordance with ASTM C 117 and ASTM C 136.

2.5 ANNULAR SEALANTS

2.5.1 Bentonite Seal

Provide palletized sodium montmorillonite in sealed containers from a commercial source, free of impurities. Diameter of pellets shall be less than one fifth the diameter of the borehole annular space to prevent bridging. Bentonite base grout shall be in accordance with ASTM D 5092.

2.5.2 Neat Cement Grout

Provide neat cement grout in accordance with ASTM D 5092. Grout shall consist of 95% Type I/II Portland Cement; 5% Bentonite. Cement shall be in accordance with ASTM C 150. Quick setting admixtures shall not be allowed. Drilling mud or cuttings shall not be used as a sealing material.

2.6 BOTTOM PLUGS

Provide flush threaded solid plug at the bottom of the well. Plug shall be the same material as the well screen to which it is attached. Joints shall be wrapped with fluoropolymer tape and provided with nitrile O-ring gaskets.

2.7 LOCKING WELL CAP FOR MONITORING WELLS

Provide flush threaded, weatherproof, and non-removable locking well cap on the top of the monitoring wells. Well cap shall be of the same material as the well casing to which it is attached. Well cap shall accommodate padlock. Provide a long shackled padlock in accordance with ASTM F 883. Provide two keys for the padlock, and turn them over to the Contracting Officer. [Locks at the well site shall be keyed alike.]

2.8 WELL HEAD COMPLETIONS

Clearly mark and secure the well to avoid unauthorized access and tampering. Provide a sign reading, "WELL IS FOR EXTRACTION AND IS NOT SAFE FOR DRINKING." Provide identification tag as follows:

DO NOT DISTURB
ID #: 24_SGU_ Date:
Installed By:
Total Depth:
Screened Interval:
TOC Elevation:
Other:
For Information, Call:

2.8.1 At-Grade Completions

Provide vault box, 48 by 48 inches, by 36 inches deep, frame, gasket, and cover. Vault shall support H-20 loading. Frame and concrete collar shall be 3 inches above the existing grade. The vault box shall have inside dimensions and openings as shown in project design drawings.

2.9 Disinfection Products

Use a clean source of potable water and 5.25% NaClO (sodium hypochlorite) solution (household bleach) to disinfect drilling solution: use 1 gallon of bleach to 100 gallons of water. Use dry calcium hypochlorite granules for the filter pack and bentonite grout: one pound of granules per cubic yard of material.

PART 3 EXECUTION

3.1 GENERAL

Notify the Contracting Officer at least 15 days prior to commencement of work. Location of wells shall be as indicated in the Design Submittal. Drilling, installation, and development of the extraction wells shall be supervised, directed, and monitored by the registered geologist or professional civil engineer. Drilling, sampling, and well development equipment introduced to the well shall be decontaminated before and after each use in accordance with ASTM D 5088. Introduction of iron bacteria into the wells during drilling shall be prevented: preventive measures include using chlorinated drilling fluid, disinfecting drilling tools with chlorine solutions, and adding dry sodium hypochlorite to the filter pack before placement.

3.2 DRILLING

Borehole shall be advanced using conventional mud rotary drilling method. If it is the opinion of the registered geologist or professional civil engineer that an alternate drilling method is required, justification for a boring method change shall be submitted to the Contracting Officer, and approval for the change granted prior to drilling. Drill crew shall be experienced and trained in drilling and safety requirements for contaminated sites. Disinfect the drilling fluid with household bleach (5.25% sodium hypochlorite solution) at the rate of one gallon of bleach for 100 gallons of water.

3.2.1 Sampling

Each soil sample shall be screened in the field with an organic vapor analyzer/flame ionization device (OVA/FID) capable of detecting vapors to a minimum of one ppm. Log the borings in accordance with ASTM D 2487 and ASTM D 2488 for lithologic description. Obtain samples from the shale shaker every 10 feet. Groundwater elevation shall be indicated.

3.2.2 Analysis

The registered geologist or professional civil engineer shall review the log data from each borehole and compare the data with the well design requirements. The registered geologist or professional civil engineer shall verify the adequacy of the well design, or shall offer a proposed modification to the design based on the geologic and hydrogeologic data obtained from the borehole. Any modifications to the well design approved by the Contracting Officer shall be considered a change to the contract documents and shall be negotiated in accordance with the "CHANGES" clause.

3.2.3 Alignment

Drillers shall use centralizers during installation of the wall piping materials to center the well in the borehole. Verify that the well is straight by lowering a 10 foot section of a minimum 4-inch diameter steel pipe in to the well. For wells deeper than 200 feet, Contractor shall verify that the well is plumb.

3.3 WELL INSTALLATION

Well installation shall be in accordance with ASTM D 5092 and EPA 600-4-89-034, and as indicated on the well construction drawings submitted by the

registered geologist or professional civil engineer and approved by the Contracting Officer. Borehole shall be stable and shall be verified straight before beginning installation.

3.3.1 Casings and Screens

Well casings, screens, plugs, and caps shall be decontaminated prior to delivery by the manufacturer and shall be certified clean. Materials shall be delivered, stored, and handled in such manner as to ensure that grease, oil, or other contaminants do not contact any portion of the well screen and casing assembly prior to installation. Personnel shall wear clean cotton or surgical gloves while handling the assembly. Centralizers shall be used to ensure that the well screen and casing assembly is installed concentrically in the borehole. When the assembly has been installed at the appropriate elevation, it shall be adequately secured to preclude movement during placement of the filter packs and annular seals. The top of the well casing shall be capped during filter pack placement.

3.3.2 Primary Filter Pack

Primary filter pack shall be placed as indicated on the approved well construction drawings to fill the entire annular space between the screen and casing assembly and the outside wall of the borehole. Place the primary filter with a tremie pipe in accordance with EPA 600-4-89-034 and ASTM D 5092. Placement of the primary filter by gravity or free fall methods is not allowed. Control speed of filter placement to prevent bridging and to allow for settlement. Prior to commencement of work, equipment and methods required to place filters shall be approved by the Contracting Officer. Disinfect the filter pack with one pound of dry calcium hypochlorite granules per cubic yard of material.

3.3.3 Bentonite Seal

Bentonite shall be placed as pellets through a tremie pipe. Control speed of bentonite placement to prevent bridging or segregation of slurry. Additional water shall be added to the annular space as directed by the registered geologist or professional civil engineer to ensure complete hydration of the bentonite.

3.3.4 Neat Cement Grout

Cement grout shall be placed in the annular space above the bentonite seal as indicated on the well construction drawings. Cement grout shall be placed as a slurry through a tremie pipe, and injected under pressure to reduce chance of voids. Grout shall be injected in one continuous operation until full strength grout flows out at the ground surface without evidence of drilling cuttings or fluid. Cement grout shall cure a minimum of 48 hours before beginning well development operations.

3.3.5 Well Head Completions

Well head completions shall be as indicated and as specified herein.

3.4 WELL DEVELOPMENT

Well development shall be in accordance with EPA 600-4-89-034 and ASTM D 5092 except as modified herein. Bailing, surging, pumping, overpumping, backwashing, air surging and jetting are acceptable development methods. Well

development operations shall be conducted continuously until development water flows clear and free of drilling fluids, cuttings, or other materials. At such time representative water samples shall be tested for pH, temperature, and specific conductivity in accordance with EPA 600/4-79/020. A minimum of four well-bore volumes and maximum of 10,000-gallons shall be extracted to remove fine-grained materials. Specific conductivity, temperature, pH, and turbidity shall be monitored during well development to demonstrate that these properties are stabilized.

3.5 TRANSPORTATION AND DISPOSAL OF CONTAMINATED SOIL AND WATER

Follow the requirements in the Waste Management section of the Remedial Action Plan.

3.7 CLEANUP

Upon completion of the well construction, remove debris and surplus materials from the jobsite and restore the site to its original condition.

-- End of Section

SECTION 02821

CHAIN LINK FENCES AND GATES

PART 1 GENERAL

1.1 REFERENCES

The publications listed below form a part of this specification to the extent referenced. The publications are referred to in the text by the basic designation only.

AMERICAN SOCIETY FOR TESTING AND MATERIALS (ASTM)

ASTM C 94	Ready-Mixed Concrete
ASTM F 883	Padlocks

1.2 SUBMITTALS

Submit the following in accordance with Section, "Submittal Procedures."

SD-02 Shop Drawings
- Gates
- Post spacing
- Location of gate, corner, end, and pull posts

SD-03 Product Data
- Chain-link fencing components
- Accessories

1.3 DELIVERY, STORAGE, AND HANDLING

Deliver materials to site in an undamaged condition. Store materials off the ground to provide protection against oxidation caused by ground contact.

PART 2 PRODUCTS

2.1 CHAIN-LINK FENCING AND ACCESSORIES

2.1.1 Fabric

Type I, zinc-coated steel, 9 gage. Mesh size, 2 inches. Provide selvage knuckled at one selvage and twisted and barbed at the other, twisted and barbed at both selvages. Height of fabric, as indicated.

2.1.2 Gates

Type I, single swing. Shape and size of gate frame, as indicated. Framing and bracing members, roundsteel alloy. Steel member finish, zinc-coated Gate frames and braces. Gate fabric, as specified for fencing fabric. Barbed wire top on gate, as specified herein. Coating for steel latches, stops, hinges, keepers, and accessories, galvanized. Gate latches, plunger bar type. Gate leaves more than 8 feet wide shall have intermediate members as necessary to provide rigid construction, free from sag or twist. Gate leaves less than 8 feet wide shall have truss rods or intermediate braces. Attach gate fabric to gate frame in accordance with manufacturer's standards, except that welding will not be permitted. Arrange padlocking latches to be accessible from both sides of gate, regardless of latching arrangement.

2.1.3 Posts and Braces

Class 1, steel pipe, Grade A. End, corner, and pull posts; Class 1, steel pipe, Grade A. Braces; Class 1, steel pipe, Grade A; Class 1, Grade B shall meet the following performance criteria when subjected to salt spray testing in accordance with ASTM B 117.

2.1.4 Fencing Accessories

Provide wire ties constructed of the same material as the fencing fabric.

2.1.5 Concrete

ASTM C 94, using 3/4 inch maximum-size aggregate, and having minimum compressive strength of 3000 psi at 28 days.

2.1.6 Grout

Provide grout of proportions one part portland cement to three parts clean, well-graded sand and a minimum amount of water to produce a workable mix.

2.1.7 Padlocks

ASTM F 883, with chain.

PART 3 EXECUTION

3.1 SITE PREPARATION

3.1.1 Clearing and Grading

Clear fence line of trees, brush, and other obstacles to install fencing. Establish a graded, compacted fence line prior to fencing installation. Compact fill used to establish fence line.

3.1.2 Excavation

Excavate to dimensions indicated for concrete-embedded items, except in bedrock. If bedrock is encountered, continue excavation to depth indicated or 18 inches into bedrock, whichever is less, with a diameter in bedrock a minimum of 2 inches larger than outside diameter of post. Clear post holes of loose material. Dispose of waste material outside limits of station as directed by the Contracting Officer.

3.2 FENCE INSTALLATION

Install fence on prepared surfaces to line and grade indicated. Install fence in accordance with fence manufacturer's written installation instructions except as modified herein.

3.2.1 Post Spacing

Provide line posts spaced equidistantly apart, not exceeding 10 feet on center. Provide gate posts spaced as necessary for size of gate openings. Do not exceed 500 feet on straight runs between braced posts. Provide corner or pull posts, with bracing in both directions, for changes in direction of 15 degrees or more, or for abrupt changes in grade. Provide drawings showing location of gate, corner, end, and pull posts.

3.2.2 Post Setting

Set posts plumb. Allow concrete and grout to cure a minimum of 72 hours before performing other work on posts.

3.2.3 Bracing
Brace gate, corner, end, and pull posts to nearest post with a horizontal brace used as a compression member, placed at least 12 inches below top of fence, and a diagonal truss rod and truss tightener used as a tension member.

3.2.4 Top and Bottom Tension Wires
Install top and bottom tension wires before installing chain-link fabric, and pull wires taut. Place top and bottom tension wires within 8 inches of respective fabric line.

3.2.5 Fabric
Pull fabric taut and secure fabric to top rail and bottom rail, close to both sides of each post and at maximum intervals of 24 inches on center. Secure fabric to posts using stretcher bars, ties or clips spaced 15 inches on center, or by integrally weaving to integral fastening loops of end, corner, pull, and gate posts for full length of each post. Install fabric on opposite side of posts from area being secured. Install fabric so that bottom of fabric is 2 inches above ground level. Install fence fabric to provide approximately 2 inch deflection at center of fabric span between two posts, when a force of approximately 30 pounds is applied perpendicular to fabric. Fabric should return to its original position when force is removed.

3.3 ACCESSORIES INSTALLATION

3.3.1 Post Caps
Install post caps as recommended by the manufacturer.

3.3.2 Supporting Arms
Design supporting arms to accommodate top rail. Install supporting arms as recommended by manufacturer. In addition to manufacturer's standard connections, permanently secure supporting arms to posts. Studs driven by low-velocity powder-actuated tools may be used with steel, wrought iron, ductile iron, or malleable iron. Do not use studs driven by powder-actuated tools with gray iron or other material that will fracture.

3.3.3 Barbed Wire

Install barbed wire on supporting arms above fence posts. Extend each end member of gate frames sufficiently above top member to carry three strands of barbed wire in horizontal alignment with barbed wire strands on the fence. Pull each strand taut and securely fasten each strand to each supporting arm or extended member. Secure wires in accordance with fence manufacturer's recommendations.

3.3.4 Gates
Install swing gates to swing through 90, 180 degrees from closed to open.

3.3.5 Padlocks

Provide padlocks for gate openings and provide chains that are securely attached to gate or gate posts. Provide padlocks keyed alike, and provide two keys for each padlock.

3.4 CLEANUP

Remove waste fencing materials and other debris from the station.

-- End of Section --

SECTION 03300

CAST-IN-PLACE CONCRETE

PART 1 GENERAL

1.1 REFERENCES

The publications listed below form a part of this specification to the extent referenced. The publications are referred to in the text by the basic designation only.

AMERICAN CONCRETE INSTITUTE (ACI)

ACI 211.1	Selecting Proportions for Normal, Heavyweight, and Mass Concrete
ACI 301	Structural Concrete
ACI 305R	Hot Weather Concreting
ACI 306.1	Cold Weather Concreting
ACI 318M/318RM	Building Code Requirements for Structural Concrete
ACI 347R	Formwork for Concrete

AMERICAN SOCIETY FOR TESTING AND MATERIALS (ASTM)

ASTM A 185	Steel Welded Wire Fabric, Plain, for Concrete Reinforcement
ASTM A 615/A 615M	Deformed and Plain Billet-Steel Bars for Concrete Reinforcement
ASTM C 31/C 31M	Making and Curing Concrete Test Specimens in the Field
ASTM C 33	Concrete Aggregates
ASTM C 94/C 94M	Ready-Mixed Concrete
ASTM C 143/C 143M	Slump of Hydraulic Cement Concrete
ASTM C 150	Portland Cement
ASTM C 920	(2001) Elastomeric Joint Sealants
ASTM D 1751	(1999) Preformed Expansion Joint Filler for Concrete Paving and Structural Construction (Nonextruding and Resilient Bituminous Types)

1.2 SUBMITTALS

SD-02 Shop Drawings

Vendor to provide reinforcing steel shop drawings, placing drawings and bar bending details in conformity with the recommendations of ACI 315.

SD-03 Product Data

Materials for curing concrete
Joint sealants
Joint filler
Material Safety Data Sheets for all concrete admixtures, curing agents, and sealers.
Installation instructions for void forms and concrete sealer.

SD-05 Design Data

Concrete mix design: Concrete mix for each formulation of concrete proposed for use including constituent quantities per cubic yard, water cementitous ratio, type, and manufacturer of cement.

SD-06 Test Reports
Concrete mix test report to include:
Concrete mix design
Sieve analysis of fine and coarse aggregates
Water cementitous ratio curve for each proposed concrete mix based on lab test.
Compressive strength test results at 28 days for laboratory concrete mix. Provide the 7-day and 14-day test results in addition to the 28 day results.

1.3 DELIVERY, STORAGE, AND HANDLING

Do not deliver concrete until forms, reinforcement, embedded items, and chamfer strips are in place and ready for concrete placement. Store sand, aggregates, and cement in accordance with ACI 301. Ensure materials can be accurately identified after bundles are broken and tags removed.

1.3.1 Reinforcement

Store reinforcement of different sizes and shapes in separate piles or racks raised above the ground. Protect from contaminants such as grease, oil, and dirt. Ensure bar sizes can be accurately identified after bundles are broken and tags removed.

1.4 QUALITY ASSURANCE

1.4.1 Concrete Workability and Strength

If during the progress of the work, it is impossible to secure concrete of the required workability and strength with the materials being furnished, the Engineer may order such changes in proportion or materials or both as may be necessary to secure the desired properties.

1.4.2 Preconstruction Testing

Preconstruction testing necessary to establish the concrete mixes shall be performed, submitted, and approved by the Contractor prior to delivery. Methods of testing shall comply with the latest applicable ASTM methods.

1.4.3 Field Testing

Field testing and reports shall conform to the latest applicable ASTM methods.

PART 2 PRODUCTS

2.1 MATERIALS FOR FORMS

Provide wood, plywood, or steel. Use plywood or steel forms where a smooth form finish is required. Lumber shall be square edged or tongue-and-groove boards, free of raised grain, knotholes, or other surface defects. Plywood: PS1, B-B concrete form panels or better or AHA A135.4, hardboard for smooth form lining. Steel form surfaces shall not contain irregularities, dents, or sags.

2.2 FORM TIES AND ACCESSORIES

Form ties and accessories shall not reduce the effective cover of the reinforcement. The use of wire alone is prohibited. Metal ties or anchorages which are necessary within the forms shall be so constructed that the metal work can be removed for a depth of at least 1-inch from the surface of the concrete without injury to the surface by spalling or otherwise. Forms shall be thoroughly cleaned before using and shall be treated with an approved material.

2.2.1 Chamfer

All exposed surfaces of concrete shall be chamfered 3/4 inch.

2.3 CONCRETE

2.3.1.1 Mix Proportions for Normal Weight Concrete

Mixture proportions shall be based on compressive strength as determined by test specimens fabricated in accordance with ASTM C 192/C 192M and tested in accordance with ASTM C 39. The maximum water-cement ratio required will be based on equivalent water-cement ratio calculations as determined by the conversion from the weight ratio of water to cement plus pozzolan, and ground granulated blast-furnace slag by weight equivalency method.

2.3.1.2 Required Average Strength of Mix Design

The selected mixture shall produce an average compressive strength exceeding the specified strength by the amount indicated in ACI 301. When a concrete production facility has a record of at least 15 consecutive tests, the standard deviation shall be calculated and the required average compressive strength shall be determined in accordance with ACI 301.

2.4 MATERIALS

2.4.1 Cement

Provide ASTM C 150, Type II, 4,000 psi, slump range of 3 - 5 inches. The mix shall contain fly ash not less than 15 percent nor more than 25 percent by weight of the total cementitious material.

2.4.2 Water

Water shall be fresh, clean, and potable; free from injurious amounts of oils, acids, alkalis, salts, organic materials, or other substances deleterious to concrete.

2.4.3 Aggregates

ASTM C 33, except as modified herein. Furnish aggregates for exposed concrete surfaces from one source. Aggregates shall not contain any substance which may be deleteriously reactive with the alkalies in the cement.

2.4.4 Nonshrink Grout

ASTM C 1107.

2.4.5 Admixtures

ASTM C 494/C 494M: Type A, water reducing; Type B, retarding; Type C, accelerating; Type D, water-reducing and retarding; and Type E, water-reducing and accelerating admixture. Do not use calcium chloride admixtures.

2.4.6 Materials for Curing Concrete

2.4.6.1 Impervious Sheeting

ASTM C 171; waterproof paper, clear or white polyethylene sheeting, or polyethylene-coated burlap.

2.4.6.2 Liquid Membrane-Forming Compound

ASTM C 309, white-pigmented, Type 2, Class B.

2.4.7 Liquid Chemical Sealer-Hardener Compound

Compound shall be magnesium fluosilicate which when mixed with water seals and hardens the surface of the concrete. Do not use on exterior slabs exposed to freezing conditions. Compound shall not reduce the adhesion of resilient flooring, tile, paint, roofing, waterproofing, or other material applied to concrete.

2.4.8 Expansion/Contraction Joint Filler

ASTM D 1751, ASTM D 1752, or 100% recycled material meeting ASTM D 1752 (subparagraphs 5.1 to 5.4). Material shall be 1/2 inch thick, unless otherwise indicated.

2.4.9 Joint Sealants

2.4.9.1 Horizontal Surfaces, 3 Percent Slope, Maximum

ASTM D 1190 or ASTM C 920, Type M, Class 25, Use T. ASTM D 1854 for surfaces subjected to jet fuel.

2.5 REINFORCEMENT

2.5.1 Reinforcing Bars

Provide per ACI 301 unless otherwise specified. ASTM A 615/A 615M and ASTM A 617/A 617M with the bars marked A, S, W, Grade 60; or ASTM A 616/A 616M with the bars marked R, Grade 60.

2.5.2 Mechanical Reinforcing Bar Connectors

ACI 301. Provide 125 percent minimum yield strength of the reinforcement bar.

2.5.3 Wire

ASTM A 82 or ASTM A 496.

2.5.4 Reinforcing Bar Supports

Provide bar ties and supports of coated or non corrodible material.

PART 3 EXECUTION

3.1 FORMS

Provide according to ACI 301. Provide forms, shoring, and scaffolding for concrete placement. Set forms mortar-tight and true to line and grade. Chamfer above grade exposed joints, edges, and external corners of concrete 0.75 inch unless otherwise indicated. Provide formwork with clean-out openings to permit inspection and removal of debris. Forms submerged in water shall be watertight.

3.1.1 Coating

Before concrete placement, coat the contact surfaces of forms with a non-staining mineral oil, non-staining form coating compound, or two coats of nitrocellulose lacquer. Do not use mineral oil on forms for surfaces to which adhesive, paint, or other finish material is to be applied.

3.1.2 Removal of Forms and Supports

After placing concrete, forms shall remain in place for the time periods specified in ACI 347R. Prevent concrete damage during form removal.

3.1.2.1 Special Requirements for Reduced Time Period

Forms may be removed earlier than specified if ASTM C 39 test results of field-cured samples from a representative portion of the structure indicate that the concrete has reached a minimum of 85 percent of the design strength.

3.2 FORMED SURFACES

3.2.1 Tolerances

ACI 347R and as indicated.

3.2.2 As-Cast Form

Provide form facing material producing a smooth, hard, uniform texture on the concrete. Arrange facing material in an orderly and symmetrical manner and keep seams to a practical minimum. Support forms as necessary to meet required tolerances. Material with raised grain, torn surfaces, worn edges, patches, dents, or other defects which will impair the texture of the concrete surface shall not be used.

3.3 PLACING REINFORCEMENT AND MISCELLANEOUS MATERIALS

ACI 301. Provide bars, wire fabric, wire ties, supports, and other devices necessary to install and secure reinforcement. Reinforcement shall not have rust, scale, oil, grease, clay, or foreign substances that would reduce the bond. Rusting of reinforcement is a basis of rejection if the effective cross-sectional area or the nominal weight per unit length has been reduced. Remove loose rust prior to placing steel. Tack welding is prohibited.

3.3.1 Vapor Barrier
Where shown on drawings, provide vapor barriers beneath the on-grade concrete floor slab. Use the greatest widths and lengths practicable to eliminate joints wherever possible. Lap joints a minimum of 12 inches. Remove torn, punctured, or damaged vapor barrier material and provide with new vapor barrier prior to placing concrete. Concrete placement shall not damage vapor barrier material.

3.3.2 Reinforcement Supports

Place reinforcement and secure with galvanized or non corrodible chairs, spacers, or metal hangers. For supporting reinforcement on the ground, use concrete or other non corrodible material, having a compressive strength equal to or greater than the concrete being placed.

3.3.3 Splicing

As indicated. For splices not indicated ACI 301. Do not splice at points of maximum stress. Overlap welded wire fabric the spacing of the cross wires, plus 2 inches. Welded splices shall not be used.

3.3.4 Future Bonding

Plug exposed, threaded, mechanical reinforcement bar connectors with a greased bolt. Bolt threads shall match the connector. Countersink the connector in the concrete. Caulk the depression after the bolt is installed.

3.3.5 Cover

ACI 301 for minimum cover, unless otherwise indicated.

3.3.6 Setting Miscellaneous Material

Position, place and secure anchors, bolts, pipe sleeves, conduits, and other items before concrete is placed. Plumb anchor bolts and check location and elevation. Temporarily fill voids in sleeves with readily removable material to prevent the entry of concrete.

3.3.7 Construction Joints

Locate joints to least impair strength. Continue reinforcement across joints unless otherwise indicated.

3.3.8 Expansion Joints and Contraction Joints

Provide expansion joint at edges of interior floor slabs on grade abutting vertical surfaces, and as indicated. Make expansion joints 1/2 inch wide unless indicated otherwise. Fill expansion joints not exposed to weather with preformed joint filler material. Completely fill joints exposed to weather with joint filler material and joint sealant. Do not extend reinforcement or other embedded metal items bonded to the concrete through any expansion joint unless an expansion sleeve is used. Provide contraction joints, either formed or saw cut or cut with a jointing tool, to the indicated depth after the surface has been finished. Sawed joints shall be completed within 4 to 12 hours after concrete placement. Protect joints from intrusion of foreign matter.

3.4 BATCHING, MEASURING, MIXING, AND TRANSPORTING CONCRETE

Provide according to ASTM C 94/C 94M, ACI 301, ACI 302.1R, and ACI 304R, except as modified herein. Batching equipment shall be such that the concrete ingredients are consistently measured within the following tolerances: 1 percent for cement and water, 2 percent for aggregate, and 3 percent for admixtures. Furnish mandatory batch ticket information for each load of ready mix concrete.

3.4.1 Measuring

Make measurements at intervals as specified in paragraphs entitled "Sampling" and "Testing."

3.4.2 Mixing

Provide and perform according to ASTM C 94/C 94M and ACI 301. Machine mix concrete. Begin mixing within 30 minutes after the cement has been added to the aggregates. Place concrete within 90 minutes of either addition of mixing water to cement and aggregates or addition of cement to aggregates if the air temperature is less than 85 degrees F. Reduce mixing time and place concrete within 60 minutes if the air temperature is greater than 85 degrees F except as follows: if set retarding admixture is used and slump requirements can be met, limit for placing concrete may remain at 90 minutes. Additional water may be added, provided that both the specified maximum slump and water-cement ratio are not exceeded. When additional water is added, an additional 30 revolutions of the mixer at mixing speed is required. Dissolve admixtures in the mixing water and mix in the drum to uniformly distribute the admixture throughout the batch.

3.4.3 Transporting

Transport concrete from the mixer to the forms as rapidly as practicable. Prevent segregation or loss of ingredients. Clean transport equipment thoroughly before each batch. Do not use aluminum pipe or chutes. Remove concrete which has segregated in transporting and dispose of as directed.

3.5 PLACING CONCRETE

Place concrete as soon as practicable after the forms and the reinforcement have been inspected and approved. Do not place concrete when weather conditions prevent proper placement and consolidation; in uncovered areas during periods of precipitation; or in standing water. Prior to placing concrete, remove dirt, construction debris, water, snow, and ice from within the forms. Deposit concrete as close as practicable to the final position in the forms. Do not exceed a free vertical drop of 3 feet from the point of discharge. Place concrete in one continuous operation from one end of the structure towards the other. Position grade stakes on 10 foot centers maximum in each direction when pouring interior slabs and on 20 foot centers maximum for exterior slabs.

3.5.1 Footing Placement

Concrete for footings may be placed in excavations without forms upon inspection and approval by the Contracting Officer. Excavation width shall be a minimum of 4 inches greater than indicated.

3.5.2 Vibration

Vibrate per ACI 301. Furnish a spare, working, vibrator on the job site whenever concrete is placed. Consolidate concrete slabs greater than 4 inches in depth with high frequency mechanical vibrating equipment supplemented by hand spading and tamping. Consolidate concrete slabs 4 inches or less in depth by wood tampers, spading, and settling with a heavy leveling straightedge. Operate internal vibrators with vibratory element submerged in the concrete, with a minimum frequency of not less than 6000 impulses per minute when submerged. Do not use vibrators to transport the concrete in the forms. Insert and withdraw vibrators approximately 18 inches apart. Penetrate the previously placed lift with the vibrator when more than one lift is required. Place concrete in 18 inch maximum vertical lifts. External vibrators shall be used on the exterior surface of the forms when internal vibrators do not provide adequate consolidation of the concrete.

3.5.3 Application of Epoxy Bonding Compound

Apply a thin coat of compound to dry, clean surfaces. Scrub compound into the surface with a stiff-bristle brush. Place concrete while compound is stringy. Do not permit compound to harden prior to concrete placement. Follow manufacturer's instructions regarding safety and health precautions when working with epoxy resins.

3.5.4 Pumping

ACI 304R and ACI 304.2R. Pumping shall not result in separation or loss of materials nor cause interruptions sufficient to permit loss of plasticity between successive increments. Loss of slump in pumping equipment shall not exceed 2 inches. Concrete shall not be conveyed through pipe made of aluminum or aluminum alloy. Rapid changes in pipe sizes shall be avoided. Maximum size of course aggregate shall be limited to 33 percent of the diameter of the pipe. Maximum size of well rounded aggregate shall be limited to 40 percent of the pipe diameter. Samples for testing shall be taken at both the point of delivery to the pump and at the discharge end.

3.5.5 Cold Weather

ACI 306.1. Do not allow concrete temperature to decrease below 50 degrees Fahrenheit. Obtain approval prior to placing concrete when the ambient temperature is below 40 degrees F or when concrete is likely to be subjected to freezing temperatures within 24 hours. Cover concrete and provide sufficient heat to maintain 50 degrees F minimum adjacent to both the formwork and the structure while curing. Limit the rate of cooling to 5 degrees F in any 1 hour and 50 degrees F per 24 hours after heat application.

3.5.6 Hot Weather

ACI 305R. Maintain required concrete temperature using Figure 2.1.5 in ACI 305R to prevent the evaporation rate from exceeding 0.2 pound of water per square foot of exposed concrete per hour. Cool ingredients before mixing or use other suitable means to control concrete temperature and prevent rapid drying of newly placed concrete. Shade the fresh concrete as soon as possible after placing. Start curing when the surface of the fresh concrete is sufficiently hard to permit curing without damage. Provide water hoses, pipes, spraying equipment, and water hauling equipment, where job site is remote to water source, to maintain a moist concrete surface throughout the curing period. Provide burlap cover or other suitable, permeable material with fog spray or continuous wetting of the concrete when weather conditions prevent the use of either liquid membrane curing compound or impervious sheets. For vertical surfaces, protect forms from direct sunlight and add water to top of structure once concrete is set.

3.6 SURFACE FINISHES EXCEPT FLOOR, SLAB, AND PAVEMENT FINISHES

3.6.1 Defects

Repair formed surfaces by removing minor honeycombs, pits greater than 1 square inch surface area or 0.25 inch maximum depth, or otherwise defective areas. Provide edges perpendicular to the surface and patch with non-shrink grout. Patch tie holes and defects when the forms are removed. Concrete with extensive honeycomb including exposed steel reinforcement, cold joints, entrapped debris, separated aggregate, or other defects which affect the serviceability or structural strength will be rejected, unless correction of defects is approved. Obtain approval of corrective action prior to repair. The surface of the concrete shall not vary more than the allowable tolerances of ACI 347R. Exposed surfaces shall be uniform in appearance and finished to a smooth form finish unless otherwise specified.

3.6.2 Not Against Forms (Top of Walls)

Surfaces not otherwise specified shall be finished with wood floats to even surfaces. Finish shall match adjacent finishes. Exposed concrete at tops of curbs and walls shall receive a hard trowel finish in accordance with ACI 301.

3.6.3 Formed Surfaces

3.6.3.1 Tolerances

ACI 117 and as indicated.

3.6.3.2 As-Cast Rough Form

Provide for surfaces not exposed to public view. Patch holes and defects. Level abrupt irregularities. Remove or rub off fins and other projections exceeding 0.25 inch in height.

3.6.4 Grout-Cleaned Finish
Provide concrete indicated with a Grout-Cleaned finish as follows: In accordance with ACI 301 on exposed portions of curbs and sump walls.

3.7 FLOOR, SLAB, AND PAVEMENT FINISHES AND MISCELLANEOUS CONSTRUCTION

Unless otherwise specified, slope floors uniformly to drains where drains are provided (ACI 302.1R). Where straightedge measurements are specified, Contractor shall provide straightedge.

3.7.1 Finish

Place, consolidate, and immediately strike off concrete to obtain proper contour, grade, and elevation before bleedwater appears. Permit concrete to attain a set sufficient for floating and supporting the weight of the finisher and equipment. If bleedwater is present prior to floating the surface, drag the excess water off or remove by absorption with porous materials. Do not use dry cement to absorb bleedwater.

3.7.1.1 Scratched

Use for surfaces intended to receive bonded applied cementitious applications. After the concrete has been placed, consolidated, struck off, and leveled to a Class C tolerance as defined below, the surface shall be roughened with stiff brushes of rakes before final set.

3.7.1.2 Floated

Use for exterior slabs where not otherwise specified. After the concrete has been placed, consolidated, struck off, and leveled, do not work the concrete further, until ready for floating. Whether floating with a wood, magnesium, or composite hand float, with a bladed power trowel equipped with float shoes, or with a powered disc, float shall begin when the surface has stiffened sufficiently to permit the operation. During or after the first floating, surface shall be checked with a 10 foot straightedge applied at no less than two different angles, one of which is perpendicular to the direction of strike off. High spots shall be cut down and low spots filled during this procedure to produce a surface level within 1/4 inch in 10 feet.

3.7.1.3 Steel Troweled

Use for floors intended as walking surfaces and for reception of floor coverings. First, provide a floated finish. The finish shall next be power troweled, and finally hand troweled. The first troweling after floating shall produce a smooth surface which is relatively free of defects but which may still show some trowel marks. Additional trowelings shall be done by hand after the surface has hardened sufficiently. The final troweling shall be done when a ringing sound is produced as the trowel is moved over the surface. The surface shall be thoroughly consolidated by the hand troweling operations. The finished surface shall be essentially free of trowel marks and uniform in texture and appearance. The finished surface shall produce a

surface level to within 1/4 inch in 10 feet. On surfaces intended to support floor coverings, any defects of sufficient magnitude to show through the floor covering shall be removed by grinding.

3.7.1.4 Broomed

Use on surfaces of exterior walks, platforms, patios, and ramps, unless otherwise indicated. Perform a floated finish, then draw a broom or burlap belt across the surface to produce a coarse scored texture. Permit surface to harden sufficiently to retain the scoring or ridges. Broom transverse to traffic or at right angles to the slope of the slab.

3.7.1.5 Pavement

Screed the concrete with a template advanced with a combined longitudinal and crosswise motion. Maintain a slight surplus of concrete ahead of the template. After screeding, float the concrete longitudinally. Use a straightedge to check slope and flatness; correct and refloat as necessary. Obtain final finish by a burlap drag. Drag a strip of clean, wet burlap from 3 to 10 feet wide and 2 feet longer than the pavement width across the slab. Produce a fine, granular, sandy textured surface without disfiguring marks. Round edges and joints with an edger having a radius of 1/8 inch.

3.7.1.6 Concrete Toppings Placement

The following requirements apply to the placement of toppings of concrete on base slabs that are either freshly placed and still plastic, or on hardened base slabs.

Placing on a Fresh Base: Screed and bull float the base slab. As soon as the water sheen has disappeared, lightly rake the surface of the base slab with a stiff bristle broom to produce a bonding surface for the topping. Immediately spread the topping mixture evenly over the roughened base before final set takes place. Give the topping the finish indicated on the drawings.

Bonding to a Hardened Base: When the topping is to be bonded to a floated or troweled hardened base, roughen the base by scarifying, grit-blasting, scabbling, planing, flame cleaning, or acid-etching to lightly expose aggregate and provide a bonding surface. Remove dirt, laitance, and loose aggregate by means of a stiff wire broom. Keep the clean base wet for a period of 12 hours preceding the application of the topping. Remove excess water and apply a 1:1:1/2 cement-sand-water grout, and brush into the surface of the base slab. Do not allow the cement grout to dry, and spread it only short distances ahead of the topping placement. Do not allow the temperature differential between the completed base and the topping mixture to exceed 10 degrees F at the time of placing. Place the topping and finish as indicated.

3.8 CURING AND PROTECTION

Perform according to ACI 301 unless otherwise specified. Begin curing immediately following form removal. Avoid damage to concrete from vibration created by blasting, pile driving, movement of equipment in the vicinity, disturbance of formwork or protruding reinforcement, and any other activity resulting in ground vibrations. Protect concrete from injurious action by sun, rain, flowing water, frost, mechanical injury, tire marks, and oil stains. Do not allow concrete to dry out from time of placement until the

expiration of the specified curing period. Do not use membrane-forming compound on surfaces where appearance would be objectionable, on any surface to be painted, where coverings are to be bonded to the concrete, or on concrete to which other concrete is to be bonded. If forms are removed prior to the expiration of the curing period, provide another curing procedure specified herein for the remaining portion of the curing period. Provide moist curing for those areas receiving liquid chemical sealer-hardener or epoxy coating.

3.8.1 Moist Curing

Remove water without erosion or damage to the structure.

3.8.1.1 Ponding or Immersion

Continually immerse the concrete throughout the curing period. Water shall not be more than 20 degrees F less than the temperature of the concrete. For temperatures between 40 and 50 degrees F, increase the curing period by 50 percent.

3.8.1.2 Fog Spraying or Sprinkling

Apply water uniformly and continuously throughout the curing period. For temperatures between 40 and 50 degrees F, increase the curing period by 50 percent.

3.8.1.3 Pervious Sheeting

Completely cover surface and edges of the concrete with two thicknesses of wet sheeting. Overlap sheeting 6 inches over adjacent sheeting. Sheeting shall be at least as long as the width of the surface to be cured. During application, do not drag the sheeting over the finished concrete nor over sheeting already placed. Wet sheeting thoroughly and keep continuously wet throughout the curing period.

3.8.1.4 Impervious Sheeting

Wet the entire exposed surface of the concrete thoroughly with a fine spray of water and cover with impervious sheeting throughout the curing period. Lay sheeting directly on the concrete surface and overlap edges 12 inches minimum. Provide sheeting not less than 18 inches wider than the concrete surface to be cured. Secure edges and transverse laps to form closed joints. Repair torn or damaged sheeting or provide new sheeting. Cover or wrap columns, walls, and other vertical structural elements from the top down with impervious sheeting; overlap and continuously tape sheeting joints; and introduce sufficient water to soak the entire surface prior to completely enclosing.

3.8.2 Liquid Membrane-Forming Curing Compound

Seal or cover joint openings prior to application of curing compound. Prevent curing compound from entering the joint. Apply in accordance with the recommendations of the manufacturer immediately after any water sheen which may develop after finishing has disappeared from the concrete surface. Provide and maintain compound on the concrete surface throughout the curing period. Do not use this method of curing where the use of Figure 2.1.5 in

ACI 305R indicates that hot weather conditions will cause an evaporation rate exceeding 0.2 pound of water per square foot per hour.

3.8.2.1 Application

Unless the manufacturer recommends otherwise, apply compound immediately after the surface loses its water sheen and has a dull appearance, and before joints are sawed. Mechanically agitate curing compound thoroughly during use. Use approved power-spraying equipment to uniformly apply two coats of compound in a continuous operation. The total coverage for the two coats shall be 200 square feet maximum per gallon of undiluted compound unless otherwise recommended by the manufacturer's written instructions. The compound shall form a uniform, continuous, coherent film that will not check, crack, or peel. Immediately apply an additional coat of compound to areas where the film is defective. Re-spray concrete surfaces subjected to rainfall within 3 hours after the curing compound application.

3.8.2.2 Protection of Treated Surfaces

Prohibit pedestrian and vehicular traffic and other sources of abrasion at least 72 hours after compound application. Maintain continuity of the coating for the entire curing period and immediately repair any damage.

3.8.3 Liquid Chemical Sealer-Hardener

Apply sealer-hardener to interior floors not receiving floor covering and floors located under access flooring. Apply the sealer-hardener in accordance with manufacturer's recommendations. Seal or cover joints and openings in which joint sealant is to be applied as required by the joint sealant manufacturer. The sealer-hardener shall not be applied until the concrete has been moist cured and has aged for a minimum of 30 days. Apply a minimum of two coats of sealer-hardener.

3.8.4 Curing Periods

ACI 301 except 10 days for retaining walls, pavement or chimneys, 21 days for concrete that will be in full-time or intermittent contact with seawater, salt spray, alkali soil or waters. Begin curing immediately after placement. Protect concrete from premature drying, excessively hot temperatures, and mechanical injury; and maintain minimal moisture loss at a relatively constant temperature for the period necessary for hydration of the cement and hardening of the concrete. The materials and methods of curing shall be subject to approval by the Contracting Officer.

3.8.5 Requirements for Type III, High-Early-Strength Portland Cement

The curing periods shall be not less than one-fourth of those specified for portland cement, but in no case less than 72 hours.

3.9 FIELD QUALITY CONTROL

3.9.1 Sampling

ASTM C 172. Collect samples of fresh concrete to perform tests specified. ASTM C 31/C 31M for making test specimens.

3.9.2 Testing

3.9.2.1 Slump Tests

ASTM C 143/C 143M. Take concrete samples during concrete placement. The maximum slump may be increased as specified with the addition of an approved admixture provided that the water-cement ratio is not exceeded. Perform tests at commencement of concrete placement, when test cylinders are made, and for each batch (minimum) or every 20 cubic yards (maximum) of concrete.

3.9.2.2 Temperature Tests

Test the concrete delivered and the concrete in the forms. Perform tests in hot or cold weather conditions (below 50 degrees F and above 80 degrees F) for each batch (minimum) or every 20 cubic yards (maximum) of concrete, until the specified temperature is obtained, and whenever test cylinders and slump tests are made.

3.9.2.3 Compressive Strength Tests

Perform according to ASTM C 39. Make five test cylinders for each set of tests in accordance with ASTM C 31/C 31M. Precautions shall be taken to prevent evaporation and loss of water from the specimen. Test two cylinders at 7 days, two cylinders at 28 days, and hold one cylinder in reserve. Samples for strength tests of each mix design of concrete placed each day shall be taken not less than once a day, nor less than once for each 100 cubic yards of concrete, nor less than once for each 5000 square feet of surface area for slabs or walls. For the entire project, take no less than five sets of samples and perform strength tests for each mix design of concrete placed. Each strength test result shall be the average of two cylinders from the same concrete sample tested at 28 days. If the average of any three consecutive strength test results is less than f'c or if any strength test result falls below f'c by more than 500 psi, take a minimum of three ASTM C 42/C 42M core samples from the in-place work represented by the low test cylinder results and test. Concrete represented by core test shall be considered structurally adequate if the average of three cores is equal to at least 85 percent of f'c and if no single core is less than 75 percent of f'c. Locations represented by erratic core strengths shall be retested. Remove concrete not meeting strength criteria and provide new acceptable concrete. Repair core holes with non-shrink grout. Match color and finish of adjacent concrete.

3.10 Field Test Reports

Submit field test reports with the daily report.

-- End of Section --

SECTION 11211

CENTRIFUGAL TRANSFER PUMPS

PART 1 GENERAL

1.1 REFERENCES

The publications listed below form a part of this specification to the extent referenced. The publications are referred to in the text by basic designation only.

AMERICAN SOCIETY OF TESTING AND MATERIALS

A48	Cast Iron Material, CL30
B584	Lead Free Sil-Brass Material

HYDRAULIC INSTITUTE (HI)

HI 1.1-1.5	Standards for Centrifugal Pumps

NATIONAL ELECTRICAL MANUFACTURERS ASSOCIATION (NEMA)

NEMA MG 1	Motors

1.2 GENERAL REQUIREMENTS

1.2.1 Standard Products

Material and equipment shall be the standard products of a manufacturer regularly engaged in the manufacture pumps with motors and shall essentially duplicate equipment that has been in satisfactory operation at least 2 years prior to bid opening.

1.2.2 Description

The pumps shall be close coupled, end suction centrifugal pump units Model 3656 M&L-Group as manufactured by G&L Pumps, a Goulds Pumps Company, or an approved equal. All pump units shall be of one manufacturer and provided complete including electric motor drive.

1.2.3 Nameplates

Pumps and motors shall have a standard nameplate securely affixed in a conspicuous place showing the manufacturer's name, address, type or style, model, serial number, and catalog number. The nameplate for each pump shall show the capacity in gpm at rated speed in rpm and head in feet of water. Nameplate for each electric motor shall show at least the minimum information required by NEMA MG 1.

1.2.4 Conditions of Service

Equipment Item Number	P-500	P-501
Flange Inside Diameter		
Suction (inches)	4	4
Discharge (inches)	3	3
Primary Service Conditions		
Capacity (gallons per minute)	550	550
Total Head (feet)	127	127

Efficiency (percent)	77	77
Minimum Total Head at Shutoff (feet)	160	160
Maximum Impeller Diameter Trimmed To Hit Condition Point (inches)	12 5/16	12 5/16
Operating Speed (RPM)	1750	1750
Maximum Motor Horsepower	30	30

1.3 SUBMITTALS

The following shall be submitted in accordance with the specification section titled SUBMITTAL PROCEDURES:

SD-02 Shop Drawings

Installation: Drawings showing the as-built installation.

SD-03 Product Data

Materials and Equipment: Manufacturer's descriptive data and technical literature, performance charts and curves for all impeller sizes for a given casing, catalog cuts, and installation instructions. Provide spare parts data for each item and piece of equipment.

Instructions: Provide diagrams, instructions, data sheets, installation procedures, and field testing procedures.

SD-06 Test Reports

Tests: Test reports showing factory and field tests performed to show compliance with the specified performance criteria.

SD-10 Operation and Maintenance Data

Vendor to submit the following O&M data to WESTON:
Centrifugal Pumps and Motors
Complete set of instructions containing the manufacturer's operating and maintenance instructions for each pump and motor. WESTON shall include O&M data in the O&M Manual.

1.4 DELIVERY AND STORAGE

All equipment delivered and placed in storage shall be stored with protection from the weather, humidity and temperature variations, dirt and dust, or other contaminants.

PART 2 PRODUCTS

2.1 PUMP CONSTRUCTION

2.1.1 Casing

The pump casing shall be spiral volute type, back pull-out design with ANSI Class 150 flat faced flanged suction and discharge connections and shall be constructed of Cast Iron, ASTM A48 CL30 material. The pump discharge nozzle shall be tangentially oriented. The complete pump unit shall be supported by the power frame. A pump casing drain shall be provided with a pipe plug.

2.1.2 Pressure Gauge Ports

Each pump shall have ports for suction and discharge pressure gauges.

2.1.3 Wear Rings

Replaceable casing and seal housing of lead free bismuth bronze shall be provided.

2.1.4 Impeller

The pump impeller shall be enclosed, constructed of lead-free sill-brass ASTM B584 material. A stainless steel bolt and washer shall provide positive attachment of the impeller to the motor shaft.

2.1.5 Seal Housing/Adapter
The seal housing and motor adapter shall be of 1-piece design, constructed of Cast Iron, ASTM A48 CL20. Registered mating fits to the pump casing and power frame shall maintain positive unit alignment and support. Sealing of casing pressure shall be maintained by an O-ring of EPR. Motor and casing connection shall be held securely by means of grade 5, high strength hex cap screws.

A bottom drainage port shall be provided to allow condensation or seal leakage to drain and not be retained within the adapter.

2.1.6 Mechanical Seal

The pump shaft seal shall be a John Crane Type 21 mechanical seal or equal constructed of the following materials.

Stationary Face	Sil-Carbide
Rotating Face	Carbon
Elastomers	EPR
Metal Components	18-8-SS

2.1.7 Shaft Sleeve

The pump shaft sleeve shall be constructed of AISI Type 303 stainless steel and shall be of the hook type design, locked in place by the impeller without necessity of other mechanical locking devices.

2.2 ELECTRICAL EQUIPMENT

2.2.1 Electric Motors

The pump driven motor shall be non-overloading of NEMA standard design JM-Frame suitable for horizontal mounting and close coupled to the pump unit as described above. The motor rating shall be

Horsepower	30
RPM	1750
Phase	3
Hertz	60
Volts	460
Service Factor	1.15
Efficiency	High efficiency
Type	Totally enclosed fan cooled

2.2.2 Variable Speed Drive
The variable speed motor drive shall be as manufactured by Saftronics, Model GP-10, general purpose open loop vector AC Drive. The drive shall be provided and programmed by the Controls subcontractor.

2.3 SPARE PARTS

A complete set of spare parts, as recommended by the pump and motor manufacturer, shall be supplied.

2.4 MANUFACTURER TESTS AND REPORTS

Each pump casing shall be hydrostatically tested by the manufacturer in accordance with Hydraulic Institute Standards at 250 psig.

Production performance testing will be conducted by the manufacturer on each pump unit. Head at three times operating points will be measured at design speed to verify performance.

PART 3 EXECUTION

3.1 INSTALLATION

Each pump and motor shall be installed in accordance with the written instructions of the manufacturer. Equipment shall be leveled and aligned as indicated in the manufacturer's installation manuals.

3.1.1 Concrete Foundations

Concrete for equipment foundations shall be integral with and of the same class as that of the slab-on-grade, unless otherwise indicated.

3.2 TESTS

After installation of the pumping units and appurtenances is complete, operating tests shall be carried out to assure that the pumping installation operates properly. Each pump unit shall be given a running field test as indicated in startup procedures of the Operation and Maintenance Plan. Each pumping unit shall be operated at its rated capacity or other point on its head-capacity curve as applicable to the design conditions. Test reports shall be submitted with the daily report.

-- End of Section -

GRUNDFOS SUBMERSIBLE EXTRACTION WELL PUMPS AND MOTORS

PART 1 GENERAL

1.1 GENERAL REQUIREMENTS

1.1.1 Standard Products

Material and equipment shall be the standard products of a manufacturer regularly engaged in the manufacture pumps with motors and shall essentially duplicate equipment that has been in satisfactory operation at least 2 years prior to bid opening.

1.1.2 Description

Pumps and motors shall be manufactured by Grundfos. The pumps and motors shall be multistage submersible pumps and motors for groundwater extraction as manufactured by Grundfos Model "S" Series as applicable to head and capacity of each well. Pump material shall be 304 AISI stainless steel. Pump outlet shall be standard for pump model numbers, motor shall be 4-inch.

1.1.3 Nameplates

Pumps and motors shall have a standard nameplate securely affixed in a conspicuous place showing the manufacturer's name, address, type or style, model, serial number, and catalog number. The nameplate for each pump shall show the capacity in gpm at rated speed in rpm and head in feet of water. Nameplate for each electric motor shall show at least the minimum information required by NEMA.

1.1.4 Conditions of Service

See attached table with extraction well number, discharge head, and pump model number.

1.2 SUBMITTALS

Submit the following:

SD-02 Shop Drawings

Installation
Drawings showing the as-built installation.

SD-03 Product Data

Materials and Equipment
Manufacturer's descriptive data and technical literature, performance charts and curves for all impeller sizes for a given casing, catalog cuts, and installation instructions. Provide spare parts data for each item and piece of equipment.

Instructions
Provide diagrams, instructions, data sheets, installation procedures, and field testing procedures.

SD-06 Test Reports

Tests
Test reports showing factory and field tests performed to show compliance with the specified performance criteria.

SD-10 Operation and Maintenance Data

Vendor to submit the following O&M data to WESTON:
Submersible Pumps and Motors
Complete set of instructions containing the manufacturer's operating and maintenance instructions for each pump and motor.

WESTON shall include O&M data in the O&M Manual.

1.3 DELIVERY AND STORAGE

All equipment delivered and placed in storage shall be stored with protection from the weather, humidity and temperature variations, dirt and dust, or other contaminants.

PART 2 PRODUCTS

2.1 PUMP CONSTRUCTION

Pumps shall be multistage, with 304 stainless steel check valve housing, check valve, diffuser chamber, impeller, inlet screen, pump shaft, straps, and cable guard,

2.2 ELECTRICAL EQUIPMENT

2.2.1 Electric Motors

The motor shall be as follows:

Horsepower Range	varies from 1.5 to 2, depending on pump model
Phase	3 phase/3-wire
Hertz	60
Volts	460
Speed	3450 RPM
Efficiency	High efficiency
Type	Grundfos MS 4000 or 402B as applicable

2.3 SPARE PARTS

A complete set of spare parts, as recommended by the pump and motor manufacturer, shall be supplied.

2.4 MANUFACTURER TESTS AND REPORTS

Manufacturer shall provide a report stating that the pumps have been tested and certified.

PART 3 EXECUTION

3.1 INSTALLATION

Each pump and motor shall be installed in accordance with the written instructions of the manufacturer.

3.2 TESTS

After installation of the pumping units and appurtenances is complete, operating tests shall be carried out to assure that the pumping installation operates properly. Each pump unit shall be given a running field test as indicated in startup procedures of the Operation and Maintenance Plan. Each pumping unit shall be operated at its rated capacity or other point on its head-capacity curve as applicable to the design conditions.

Submit test results with the daily report.

-- End of Section -

Grundfos Pump Model Numbers For El Toro SGU-24 Extraction Wells

Well ID	GW Extraction Rate	Grundfos Pump Model (horspower)
	(GPM)	
24EX03	10	10S20-27 (2 HP)
24EX4		10S20-27 (2 HP)
24EX5		10S20-27 (2 HP)
24EX6		10S20-27 (2 HP)
24_SGU-01	10	10S20-27 (2 HP)
24_SGU-02	10	10S20-27 (2 HP)
24_SGU-03	10	10S20-27 (2 HP)
24_SGU-04	10	10S20-27 (2 HP)
24_SGU-05	10	10S20-27 (2 HP)
24_SGU-06	10	10S20-27 (2 HP)
24_SGU-07	10	10S20-27 (2 HP)
24_SGU-08	11	10S20-27 (2 HP)
24_SGU-09	11	10S20-27 (2 HP)
24_SGU-13	11	10S20-27 (2 HP)
24_SGU-10	11	10S20-27 (2 HP)
24_SGU-12	11	10S20-27 (2 HP)
24_SGU-15	11	10S20-27 (2 HP)
24_SGU-11	11	10S20-27 (2 HP)
24_SGU-14	11	10S20-27 (2 HP)
24_SGU-16	12	10S20-27 (2 HP)
24_SGU-17	12	10S20-27 (2 HP)
24_SGU-18	12	10S20-27 (2 HP)
24_SGU-19	12	10S20-27 (2 HP)
24_SGU-21	12	10S20-27 (2 HP)
24_SGU-20	12	10S20-27 (2 HP)
24_SGU-22	12	16S20-18 (2 HP)
24_SGU-23	12	16S20-18 (2 HP)
24_SGU-24	12	16S20-18 (2 HP)
24_SGU-25	12	16S20-18 (2 HP)
24_SGU-26	12	10S15-21 (1.5 HP)
24_SGU-27	12	10S15-21 (1.5 HP)
24_SGU-28	12	10S15-21 (1.5 HP)
24_SGU-29	12	16S20-18 (2 HP)
24_SGU-30	13	16S20-18 (2 HP)
24_SGU-35	18	16S20-18 (2 HP)
24_SGU-34	18	16S20-18 (2 HP)
24_SGU-33	18	16S20-18 (2 HP)
24_SGU-32	18	16S20-18 (2 HP)
24_SGU-31	18	16S20-18 (2 HP)

HIGH-DENSITY CROSSLINKED POLYETHYLENE TANK

PART 1 GENERAL

1.1 REFERENCES

The publications listed below form a part of this specification to the extent referenced. The publications are referred to in the text by basic designation only.

AMERICAN SOCIETY OF TESTING AND MATERIALS (ASTM)

ASTM D 638	Standard Test Method for Tensile Properties of Plastics
ASTM D 746	Brittleness Temperature of Plastics and Elastomers by Impact
ASTM D 790	Standard Test Methods for Flexural Properties of Unreinforced and Reinforced Plastics and Electrical Insulating Materials
ASTM D 883	Standard Definitions of Terms Relating to Plastics
ASTM D 1505	Density of Plastics by the Density-Gradient Technique
ASTM D 1525	Vicant Softening Temperature of Plastics
ASTM D 1693	ESCR Spec Thickness
ASTM D 1998	Standard Specifications for Polyethylene Upright Storage Tan; Section 11.3; Low Temperature Impact Test; Section 11.4 Oxylene-Insoluble Fraction (Gel Test)

AMERICAN NATIONAL STANDARDS INSTITUTE (ANSI)

ANSI B 16.5	Pipe Flanges and Flanged Fittings

1.2 GENERAL REQUIREMENTS

1.2.1 Standard Products

Material, tank, and appurtenances shall be the standard products of a manufacturer regularly engaged in the manufacture of those products and shall essentially duplicate products that have been in satisfactory operation at least 2 years prior to bid opening.

1.2.2 Description

The manufacturer shall supply two vertical, double-contained, high density crosslinked polyethylene storage tanks as specified herein, and as indicated on the nozzle schedules and fill line assembly drawings.

1.2.3 Nameplates

The tank shall have a mylar nameplate securely affixed in a conspicuous place showing the manufacturer's name, address, type or style, model, serial number, capacity, and catalog number.

1.2.4 Conditions of Service

Equipment Item Numbers	T-300A and T-300B
Service	Double-contained equalization tank for groundwater
Location	Outdoor, direct sunlight
Primary Capacity	5,400 gallons each
Pressure	Atmospheric pressure
Vent	Air vent to be plumbed to gas-phase granulated activated carbon canister
Tank contents	Water
Specific gravity	1.0 SG
Secondary containment	Each tank shall have secondary containment.

1.2.5 Seismic Calculations and Drawing Approval

Manufacturer's stamped seismic calculations and shop drawings shall be approved by WESTON prior to any manufacturing of tanks, fittings, nozzles, manways, or other appurtenances. Seismic calculations shall be stamped by California Registered Professional Engineer.

1.3 SUBMITTALS
The following shall be submitted in accordance with Section SUBMITTAL PROCEDURES:

SD-02 Drawings

Shop Drawings
Manufacturer: Prior to manufacturing/shipment of the tank, provide stamped seismic calculations, dimensions of the tank, fittings, attachments, bolt/gasket materials, locations of fittings and nozzles and attachments. Show locations and size of manways on the drawings. Provide weight of tank, type of resin used and manufacturer's specification of resin used. Provide a statement with tank shipment that tank fabrication was done in accordance with these specifications. Provide a manufacturer's certificate of compliance with the tank shipment that stating: all fittings have been installed by the tank manufacturer; hydrostatic tests have been performed by the manufacturer; and all fittings were installed prior to tests.

As-Built
WESTON: Provide drawings showing the as-built tank installation.

SD-03 Product Data

Materials and Equipment
Manufacturer's descriptive data and technical literature, catalog cuts, and installation instructions. Provide spare parts lists.

Instructions
Provide unloading and installation instructions prior to shipment.

Instructions
Provide diagrams, instructions, data sheets, installation procedures, and field testing procedures.

SD-06 Test Reports

Tests

FACTORY TESTS: Test reports showing factory and field tests performed to show compliance with the specified performance criteria. Factory test reports shall include the hydrostatic, impact, degree of crosslink, and wall thickness. Submit factory reports prior to shipment.

FIELD TESTS: WESTON shall perform field tests that shall include a visual inspection and 4-hour hydrostatic test. WESTON shall submit field test reports attached to the Daily QC/Production Reports.

SD-10 Operation and Maintenance Data

The manufacturer shall provide one (1) complete set of instructions containing the manufacturer's operating and maintenance instructions for the tank and appurtenances.

WESTON shall include O&M data in the O&M Manual.

1.4 TRANSPORTATION, DELIVERY, AND STORAGE

During shipment, flange faces shall be protected from damage and openings shall be covered to prevent the entrance of dirt and debris. All equipment delivered and placed in storage shall be stored with protection from the weather, humidity and temperature variations, dirt and dust, or other contaminants. Storage shall be per the manufacturer's instructions.

PART 2 PRODUCTS

2.1 GENERAL

Like items of materials and equipment shall be the end products of one manufacturer in order to provide standardization for appearance, operation, maintenance, spare parts, and manufacturer's services.

2.2 MATERIAL
2.2.1 Plastic

The tanks shall be molded from high density crosslinked polyethylene. The resin used shall be Martex CL-200 YJN as manufactured by Phillips Petroleum Company Plastics Division, Paxon 7004 as manufactured by Paxon, Inc., or of approved resins of equal physical and chemical properties.

2.2.2 Fillers and Pigments

The plastic shall not contain any fillers. All plastics shall contain a minimum of 0.25 percent U.V. stabilizer and maximum of 0.60 percent any appropriate for outdoor full sunlight conditions. Color shall be green.

2.2.3 Manufacturer's Process

The tanks shall be manufactured by Poly Processing Company, or an approved equal. The tanks shall be constructed by the rotational molding process.

2.2.4 Storage

The tank shall be capable of storing groundwater at temperature ranges of 35 to 130 degrees Fahrenheit.

2.2.5 Material Properties

The nominal properties of materials are as follows based on molded parts:

Property	ASTM Standard	Value
Density	D 1505	0.940 to 0.945 g/cc
ESCR Spec Thickness	D 1693	> 1,000 hours
Tensile Strength, Ultimate 2 in/min	D 638 Type IV Spec	2,600 psi
Elongation at Break 2 in/min	D 638	400 percent
Vicant Softening Temp	D 1525	240 degrees F
Brittleness Temp	D 746	-130 degrees F
Flexural Modulus	D 790	100,000 - 110,000 psi

2.3 DOUBLE CONTAINMENT SYSTEM

Tanks shall consist of crosslinked polyethylene primary tank with a secondary containment tank. The primary tank shall be vertical, cylindrical, flat bottom, dome top, and seamless construction. The secondary containment tank, outer tank, shall be a crosslinked polyethylene, open top, vertical, cylindrical, flat bottom, and seamless construction, as manufactured by Poly Processing's Model "Safe-Tank" construction or equal.

The tank diameter shall be measured externally. Tolerance on the outside diameter including out of roundness shall be plus or minus two percent. Measurement shall me taken in a horizontal position. The knuckle radius at bottom to wall shall be a minimum of one inch.

The minimum wall thickness shall be 1/4-inch in all places.

All edges cut out, such as entrance manway shall be trimmed to have smooth edges.

2.4 ACCESSORIES

2.4.1 Manway

The manway openings shall be a minimum of 24-inches. The manway cover shall be a bolt on type lid manufactured of crosslink polyethylene. Bolt used on the lid shall be polyethylene, nylon, or a compatible plastic material.

2.4.2 Gasket Material

Gasket materials shall be EPDM or other approved material. Bolts in contact with tank contents shall be stainless steel.

2.4.3 Sidewall Transition Fittings

Tanks shall be supplied with a 4-inch bellows-style secondary transition fitting with PVC nipple and dip tube as manufactured by Poly Processing.

2.5 Seismic Tie Down Systems

The seismic tie down system shall be as follows:

316 SS seismic clamps
316 SS hoop ring and restraints
Epoxy coated galvanized steel base plates and accessories.

Anchor bolts to be provided by the WESTON.

2.6 Leak Detection System

Secondary containment leak detection sensor/transmitter shall be dry contact type. Manufacturer shall install a 2-inch PVC Schedule 80 bulkhead fitting for the secondary containment leak detection sensor. Place fitting high on the sidewall as shown on the nozzle schedule.

2.7 TESTS TO BE PERFORMED BY THE MANUFACTURER

The tank manufacturer shall perform the tests described below prior to shipping.

Hydrostatic Test
Impact Test
Degree of Crosslinking Test
Wall Thickness

Test results will be provided to WESTON prior to shipment.

PART 3 EXECUTION

3.1 INSTALLATION BY WESTON

Off load the tank from the truck and install the tank according to the Drawings and the manufacturer's instructions. Install fitting connections with flexible type connections as shown on the drawings. Make all pipe connections to the tanks as shown on the Drawings. After the hydrostatic

field test has been completed, install tank supports members and anchor in their permanent positions.

3.2 FIELD TESTS BY WESTON

After the tank has been placed in the location shown on the Drawings, perform a visual inspection for defects and a hydrostatic field test. The visual inspection shall include verifying that the tanks conform to the specifications, and looking for defects, damage, or missing appurtenances. If appurtenances are missing, the manufacturer shall ship missing items within 5 days and at no extra cost. Damages shall be repaired; acceptance of repairs is at WESTON's discretion.

The hydrostatic field test shall be a 4 hour test. Close all valves and other openings, and place blind flanges over flange connections. Fill tank with clean water and observe tank conditions for a period of 4 hours. Look for evidence of weeping or capillary action prior to acceptance. The manufacturer shall replace a tank that fails the hydrostatic leak test. Document results and submit to the Contracting Officer.

Submit field test results with the daily report.

-- End of Section -

Hydrostatic Testing of PVC Pipe and Manifolds

PART 1 GENERAL

1.1 SCOPE OF WORK

1.1.1 DESCRIPTION

This specification shall be used to hydrostatically test PVC piping systems.

1.2 SUBMITTALS

The following shall be submitted in accordance with Section, "Submittal Procedures."

SD-06 Test Reports

FIELD TESTS: WESTON shall perform a visual inspection and hydrostatic leak test. WESTON shall submit field test reports attached to the Daily QC/Production Reports.

PART 2 PRODUCTS

2.1 TEST FLUID

Water shall be used as the test fluid unless pre-approved by the Engineer.

2.2 TEST EQUIPMENT

2.2.1 Clean Fluid

Us clean water of sufficient capacity to deliver the required test pressure.

2.2.2. Temporary Strainer

Place a strainer on inlet side of the pump, or any equipment, to prevent foreign matter from entering the system or equipment.

2.2.3 Valves

Shall be provided on the suction and discharge side of the test pump (or other equipment).

2.2.4 Relief Valve

Set at a pressure to relieve at 5 to 10 percent above the required test pressure, but at pressure to keep from overstressing any pipe system component.

2.2.5 Pressure Gauge(S)

Capable of reaching 50 percent over the test pressure These should have shutoff valves and located at the equipment inlet and discharge and any other place deemed acceptable to the Engineer.

2.2.6 Pressure Source

Use a controlled source of applying pressure (a separate test pump is usually used). System pumps may not be used for this test.

2.2.7 Drain Connections and/or Vents

Temporary connection, with valve, required if cannot use appurtenances on permanent piping.

2.2.8 Check of Test Equipment

All items shall be checked for accuracy and proper operation before use in test procedures.

PART 3 EXECUTION

3.1 SITE WORK

3.1.1 Pipe Curing or Cooling

All pipes shall remain undisturbed for at least the required minimum curing or cooling time.

3.1.2 Fluid

Clean water shall be used for the test, and, if other than ambient temperature is required, determine the test temperature.

3.1.3 Equipment

The equipment used for the test shall be of a material compatible with the test fluid. Normally this material would be equal to the piping material.

3.1.4 Vents

Vents shall be provided at the high points of the system and drains provided where means of venting or draining do not exist.

3.1.5 Protection of Valves and Instrumentation

Remove or block off, all relief valves, rupture discs, alarms, control instruments, etc. that shall not be subjected to the pressure. Take care not to exceed pressure ratings for any item.

3.1.6 Preparation for Filling

All discs, balls, or pistons from check valves shall be removed if they interfere with filling of the system. Open all valves between inlet and outlet of the section to be tested.

3.1.7 System Closure

Connect test pump and provide temporary closures for all the external openings in the system. Use caution to insure that the closures are properly designed and strong enough to withstand the test pressure.

3.1.8 Exposure of Joints to the Tested

All joints are to be exposed for examination during the test.

3.1.9 Previously Tested Joints

A joint previously tested in accordance with the specification may be covered or insulated.

3.1.10 Expansion Joints

Expansion joints shall be provided with temporary restraint for additional pressure under test or shall be isolated from the test.

3.1.11 Flanged Joints

Flanged joints, where blanks are inserted to isolate equipment during the test, need not be tested.

3.1.12 System Support and Anchoring

Prior to testing, system and components shall be supported and anchored to prevent movement during test, except expansion provisions shall be made in the pipe and that movement, and restraint, provided for.

3.2 TEST PROCEDURE

3.2.1 Test Pressure

The hydrostatic test pressure for PVC pipe shall be 1½ times the design pressure.

3.3 TESTING FOR PVC PIPE

3.3.1 Personnel

See that all personnel not involved in the test vacate the area.

3.3.2 Consult Manufacturer's Recommendation

Testing method shall be in accordance with manufacturers' recommendations.

3.3.3 Fill System

Allow the test fluid to enter the system. Open vents installed at high points to allow displacement of all entrapped air. For all pipes the maximum rate of filling shall be limited to produce a nominal flow velocity that does not exceed 1-foot per second in the pipe to be tested.

3.3.4 Close vents and Take Safety Precautions

When pipe is full, stabilized, and at proper temperature, close vents and restrict personnel in the test area to those involved in the test, and provide personnel with protective equipment.

3.3.5 Pressurize System

Raise the pressure slowly with the test pump until the predetermined test pressure is reached. Unless otherwise noted, leakage tests may follow directly after a successful pressure test. Keep personnel at a safe distance at all times. Maintain pressure for the time indicated in the test procedure; or if not indicated, for pressure test of 2 hours minimum and leakage test of 2 hours minimum.

3.3.6 Reduce Pressure and Inspect

Reduce the pressure about 20 percent and hold it at that point while the entire system is carefully inspected for leaks, cracks, or other signs of defects.

3.3.7 Correction of Defects

If defects are found, the pressure shall be released, the system drained, the defects corrected and the test repeated, until tests are successful.

3.3.8 Depressurize System

After a satisfactory test has been completed, the line shall be slowly depressurized at a point remote from the monitoring system and drained.

3.4 FLUSHING

3.4.1 Drain Lines

Lines tested with water shall be completely drained.

3.4.2 Flush Lines

Lines shall be flushed, after test, and liquid disposed of as acceptable to the Engineer.

3.5 TEST RECORDS

Records shall be maintained of all tests performed. Test record shall include, as a minimum:

i. Date, time and duration of testing
ii. Identification of piping tested
iii. Test procedures and equipment
iv. Test fluid and pressure
v. Any repairs and retesting required
vi. Signatures of Contractor and Engineer
vii. If leaks are found, they shall be noted and the date and method of repair noted
viii. Records of test shall be maintained by WESTON and copies shall be furnished to the Navy within 10 working days after completion of the test

-- End of Section --

SECTION 15051

VALVES, FITTINGS, FLANGES, AND INSTRUMENTS FOR VAULTS

PART 1 GENERAL

1.1 DESCRIPTION

This specification covers valves, fittings, instruments, and well vaults, as shown on the drawings.

1.1.1 Layout of Vaults, Pipe Anchors, and Instruments

Layout of valves, pipe, instruments, and appurtenances in well vaults are found in the project drawings.

1.2 SUBMITTALS

The following shall be submitted in accordance with Section 01330, "Submittal Procedures."

SD-03 Product Data

PVC pipe, fittings, and flanges

PVC valves: globe, swing check, and sample port

HDPE flange adapter and backup ring

Flexible Hose

Magnetic Flow Meter and Totalizer

Pressure Transducer for water level

SD-10 Operation and Maintenance Data

The manufacturer shall provide to WESTON Operation and Maintenance data for instruments and valves. WESTON shall include O&M data in the O&M Manual.

1.3 DELIVERY AND STORAGE

All materials and instruments delivered and placed in storage shall be stored with protection from the weather, excessive humidity and excessive temperature variation; and dirt, dust, or other contaminants.

PART 2 PRODUCTS

2.1 STANDARD PRODUCTS

Materials and instruments shall be the standard products of a manufacturer regularly engaged in the manufacture of such products and shall essentially duplicate items that have been in satisfactory use for at least 2 years prior to bid opening.

2.2 NAMEPLATES

Instruments (i.e., flowmeters and pressure transducers) shall have the manufacturer's name, address, model or serial number on a plate secured to the instrument.

2.3 PIPE AND FITTINGS FOR VAULTS (WELL, FLUSHING, AIR RELEASE VALVE, AND END LINE A VAULTS)

2.3.1 PVC Pipe, Fittings, Flanges

PVC pipe, fittings, and flanges inside the vaults shall PVC Schedule 80, conforming to ASTM D 1784, Class 12454-B. Pipe shall be suitable for field cutting and solvent welding. All connections shall be solvent welded joints, where applicable. Pipe and fittings shall be joined using solvent cement rated for potable water by the National Sanitation Foundation. Fitting components shall be socket type for solvent welding or shall be flanged. Socket type solvent welded connections shall have socket diameters, lengths, and wall thickness as required by ASTM D 2467. Fittings shall be pressure-rated to the corresponding size pipe as prescribed in ASTM D 1785. Valves, union, and flanges shall be rated for 150 psi for water service at 73 degrees Fahrenheit, non-shock and have a minimum burst requirement of 3.3 times the rated pressure.

Fittings and pipe shall be clearly marked with the manufacturer's name, the material, and ASTM number.

Wherever a PVC flange and fitting (e.g. 90-degree elbow) are joined as shown on the drawings, the flanges shall be a spigot flange Van Stone-style (as manufactured by Chemtrol Figure No. 4551-2A) to save space.

2.3.2 PVC-to-HDPE Flanged Transitions

For transition from PVC to HDPE pipe in the well vaults, flushing ports, air release valve boxes, and End of Line A vault, use PVC flange and HDPE flange adapter with metal backup ring. Both the PVC flange and HDPE flange adapter with backup ring shall be Class 150 with bolt holes located per ANSI Class B 16.5. Elastomers shall be EPDM. Manufacturer of PVC ANSI B 16.5 flanges shall be Spears or Chemtrol. Manufacturer of HDPE flange adapters shall be by Industrial Pipe Fittings. Manufacturer of backup rings shall be Improved Piping Products. Bolts to be corrosion resistant such as zinc plated or similar.

2.4 ABOVE-GRADE FLEXIBLE HOSE FOR WELL VAULTS

Hose shall be installed where shown in the drawings. Above-grade hose shall be flexible, pressure rated as above for PVC Schedule 80 pipe, and suitable for the contaminants and concentrations. Hose shall be connected to the pump discharge pipe and PVC Schedule 80 pipe with cam-locks or quick disconnect couplings. Hose shall be Redwing Fuel Oil Transfer Hose by Goodyear, Catalog number 98-130 or similar.

2.5 MAGNETIC FLOW METER FOR RATE AND TOTAL FLOW FOR WELL VAULTS

The magnetic flowmeter shall be a wafer-style 1-inch meter as manufactured by Sparling, Tigermag Model FM626. Meter shall provide rate and total flow, and units shall be in gallons per minutes, and fractions thereof. Magmeter shall

be installed in the bottom section of a piping "U" that is formed from pipe and fittings. Wafer-style magmeter will be installed between PVC flanges. Mounting bolts and grounding rings shall be provided by the meter manufacturer. Accuracy shall be 0.5%. Liner shall be Tefzol or ceramic. Electrodes shall be 316 SS or Titanium. Two-year warranty, positive zero return, empty pipe detection, low flow cut-off, 4-20 mA DC, noise suppression shall be standard features.

2.6 GLOBE VALVE FOR WELL VAULTS

Globe valves for well vaults shall be of a thermoplastic construction, 1-inch, flanged, and as manufactured by ASAHI-America, Model 1262. PVC shall conform to ATSM D 1784 Cell Classification 12454-A. Globe valves shall be ANSI Class 6 shut-off; have no metal contact with media; have polypropylene plug, and be rated for 150 psi at 70 degrees Fahrenheit. Bolts for flanges shall be corrosion resistant material such as zinc coated or similar.

2.7 SWING CHECK VALVE FOR WELL VAULTS

Check valve shall be a flanged swing check valve as manufactured by ASAHI-America. Valves shall be of solid thermoplastic construction and shall incorporate a single disc design suitable for either horizontal or vertical installation. Valves shall be top-entry bonnet design for maintenance purposes. PVC shall conform to ASTM D 1784 Cell Classification 12454-A. Bolts for flanges shall be corrosion resistant such as zinc coated or similar.

2.8 SAMPLE PORT VALVE FOR WELL VAULTS

Sample port valves shall be as manufactured by Chemtrol. Valves shall be Chemtrol A45CC-V, needle valve, 1/4-inch, for hose connection on one end and male pipe thread on the other end. Rated for 150 psi at 70 degrees Fahrenheit.

2.9 SUBMERSIBLE PRESSURE TRANSDUCER FOR WATER LEVEL IN WELLS

Submersible pressure transducer shall be as manufactured by KPSI, Series 700. Features shall include accuracy of $\pm$ 0.05%, 316 SS or titanium construction, cable lengths specific for each well depth as determined during well construction, cable shall have a jacket material compatible with contaminants and concentration in groundwater at the site.

2.10 GATE VALVE AND SWING CHECK VALVE FOR FLUSHING PORT VAULTS

Gate valves and swing check valves for flushing port shall be PVC Schedule 80, flange or union connected, and manufactured by ASAHI-America. Swing check and gate valves shall be manufactured of PVC that conforms to ASTM D 1784 Cell Classification 12454-A. All PVC valve parts to be made of high-impact PCV and rated for ANSI Class 150. Elastomers to be EPDM. Swing check valves shall be top entry bonnet design for maintenance purposes. Gate valves shall have no metal to media contact, shall be a tapered cylindrical plug design, be pressure rated at 150 psi at 70 degrees Fahrenheit, have a non-rising stem, and come standard with sealed position indicator.

2.11 GATE VALVE FOR END OF LINE A

Gate valve for the valve vault located at the end of Line A shall be PVC Schedule 80, flange or union connected, and manufactured by ASAHI-America. Gate valve shall be manufactured of PVC that conforms to ASTM D 1784 Cell Classification 12454-A. All PVC valve parts to be made of high-impact PVC and rated for ANSI Class 150. Elastomers to be EPDM. Gate valves shall have no metal to media contact, shall be a tapered cylindrical plug design, be pressure rated at 150 psi at 70 degrees Fahrenheit, have a non-rising stem, and come standard with sealed position indicator.

2.12 VAULT CONSTRUCTION

All vaults (well, flushing port, air release, and End Line A vaults) shall be pre-cast concrete manufactured to the size and dimensions shown on the drawings. Knockouts to be placed as shown on the drawings. Lids to be H-20 traffic rated. All vaults to be bottomless to promote drainage. Well vault lids shall be galvanized steel and torsion hinged. Flushing port, air release, and End Line A vaults to have traffic rated lids.

2.13 PIPE SUPPORTS

Pipe supports in well vaults shall be type and manufacturer as shown on the drawings. Supports shall be non-metallic in well vaults and metallic in all other vaults (flushing port, air release, and End Line A vaults).

PART 3 EXECUTION

3.1 SITE WORK

3.1.1 Excavation, Trenching, and Backfilling

Excavation, trenching, and backfilling for the vaults shall be as shown and in accordance with Section 02222, EXCAVATION, TRENCHING, AND BACKFILLING.

3.1.2 Electric Work

Wiring and terminations shall be as shown on the electrical drawings, and in accordance with the latest edition of the National Electric Code.

3.2 PVC PIPE, FITTINGS, AND VALVES

Piping and instruments in vaults shall be installed so as to provide easy access without stepping on piping or instruments, and to provide sufficient working room. Piping and instruments in vaults shall be installed and supported as shown on the drawings.

3.2.1 Pipe

Installation and joining of pipe shall be done according to the manufacturer's instructions. Joints for PVC pipe shall be solvent cemented unless flanged as shown on the Drawings. Clean dirt and moisture from pipe and fittings, bevel pipe ends slightly with emery cloth to remove any shoulder or burrs created by cutting pipe. Primer shall be used whenever recommended by the pipe, fitting, or cement manufacturer. Solvent cementing

shall not be performed whener the temperature is 40 degrees Fahrenheit and falling.

3.2.2 Fittings and Valves

Installation of valves and fittings shall be in accordance with manufacturer's instructions. Cement that has been allowed to run from joints shall be cleaned from the pipe and fittings immediately.

3.2.3 PVC to HDPE Connections

All transitions from PVC to HDPE shall be made with PVC flanges and HDPE flange adapters and metal backup rings.

3.2.4 Pipe Supports in Well Vaults and Flushing Vaults

Horizontal and vertical runs of pipe in vaults shall be securely supported as shown on the drawings.

3.3 VAULTS

Vaults shall be installed on the compacted bedding material (aggregate) to the line and grade shown on the drawings.

3.4 TESTS

Test of piping in the vaults will include a hydrostatic filed test of the vault manifold system to determine if leaks are present at the joints. Perform the test at no more than the maximum pressure rating of the lowest-rated valve or fitting. The test fluid shall be potable water at ambient temperature. Use of air for the test fluid will not be allowed. See Section 15051 HYDROSTATIC FIELD TESTS FOR PVC PIPE for details on test pressures, duration, record keeping, repairs, and re-tests.

-- End of Section --

SECTION 15064

PVC PIPE, VALVES, FITTINGS, AND FLANGES FOR COMPOUND

PART 1 GENERAL

1.1 REFERENCES

AMERICAN SOCIETY FOR TESTING AND MATERIALS

ASTM D 1784	Standard Specification for Rigid Poly(Vinyl Chloride) (PVC) Compounds and Chlorinated Poly(Vinyl Chloride) (CPVC) Compounds.
ASTM D 1785	Standard Specification for Poly(Vinyl Chloride) (PVC) Plastic Pipe, Schedules 40, 80, and 120
ASTM D 2467	Standard Specification for Socket-Type Poly(Vinyl Chloride) (PVC) Plastic Fittings, Schedule 80
ASTM D 2564	Standard Specification for Solvent Cements for Poly(Vinyl Chloride) (PVC) Pipe and Fittings
ASTM D 2855	Standard Specification for Making Solvent-Cemented Joints for Poly(Vinyl Chloride) (PVC) Pipe and Fittings

NATIONAL SANITAITON FOUNDATION

NSF 61	Drinking Water System Components - Health Effects

1.2 DESCRIPTION

This specification covers PVC pipe, valves, fittings, and flanges for the compound, as shown on the Drawings.

1.2.1 Layout

Layout of valves, pipe, instruments, and appurtenances in compound shall be as shown on the Drawings.

1.3 SUBMITTALS

The following shall be submitted in accordance with Section 01330, "Submittal Procedures."

SD-03 Product Data

Provide product data sheets for PVC Schedule 80 socket pipe, fittings, valves, control valves, and flanges

SD-10 Operation and Maintenance Data

The manufacturer shall provide to WESTON Operation and Maintenance data for instruments and valves. WESTON shall include O&M data in the O&M Manual.

1.4 DELIVERY AND STORAGE

All materials and instruments delivered and placed in storage shall be stored with protection from the weather, excessive humidity and excessive temperature variation; and dirt, dust, or other contaminants.

Pipe received in standard lifts should remain the lift until ready to use. Do not stack lifts more than three high. Store loose pipe in racks with minimum

support at three foot spacing. When stored outdoors, keep pipe shaded but not covered directly when stored in high ambient temperature/

Store fittings and flanges in original cartons to keep them free of dirt and to reduce damage. Store fittings indoors when possible.

PART 2 PRODUCTS

2.1 STANDARD PRODUCTS

Materials and instruments shall be the standard products of a manufacturer regularly engaged in the manufacture of such products and shall essentially duplicate items that have been in satisfactory use for at least 2 years prior to bid opening.

2.2 PIPE AND FITTINGS FOR COMPOUND

2.2.1 PVC Pipe, Fittings, Flanges

2.2.1.1 PVC pipe Schedule 80, conforming to ASTM D 1784, Class 12454-B. PVC pipe shall be socket-type manufactured per ASTM D 2467. Pipe shall be socket-type and suitable for field cutting and solvent welding. All connections shall be solvent welded joints, where applicable. Pipe and fittings shall be joined using solvent cement rated for potable water by the National Sanitation Foundation (NSF 61).

2.2.1.2 PVC Fitting components shall be Schedule 80 socket type for solvent welding or shall be flanged. Socket type solvent welded connections shall have socket diameters, lengths, and wall thickness as required by ASTM D 2467. Fittings shall be pressure-rated to the corresponding size pipe as prescribed in ASTM D 1785. Valves, union, and flanges shall be rated for 150 psi for water service at 73 degrees Fahrenheit, non-shock and have a minimum burst requirement of 3.3 times the rated pressure.

Fittings and pipe shall be clearly marked with the manufacturer's name, the material, and ASTM number.

Flanges shall be Class 150, ANSI B 16.5 with EPDM elastomers.

2.2.1.3 PVC-to-HDPE Transitions at the compound battery limits, use a below-grade PVC to HDPE transition fitting. Transition fittings shall be as distributed by ISCO or P&F Distribution.

2.3.1.4 PVC flanges shall be Class 150 with bolt holes located per ANSI Class B 16.5. Elastomers shall be EPDM. Manufacturer of PVC ANSI B 16.5 flanges shall be Spears or Chemtrol. Bolts to be corrosion resistant such as zinc plated or similar.

2.3 GLOBE VALVE for pump discharge

Globe valves for pump discharge shall be of a brass construction, same size as the lines, and flanged per ANSI B 16.5. Bolts for flanges shall be corrosion resistant material compatible with the valve material of construction.

2.4 SWING CHECK VALVE

Check valve shall be a flanged swing check valve as manufactured by ASAHI-America. Valve shall be the same size as the pipe line. Valves shall be of solid thermoplastic construction and shall incorporate a single disc design

suitable for either horizontal or vertical installation. Valves shall be top-entry bonnet design for maintenance purposes. PVC shall conform to ASTM D 1784 Cell Classification 12454-A. Bolts for flanges shall be corrosion resistant such as zinc coated or similar.

2.5 SAMPLE PORT VALVE for compound

Sample port valves shall be as manufactured by Chemtrol. Valves shall be Chemtrol A45CC-V, needle valve, 1/4-inch, for hose connection on one end and male pipe thread on the other end. Rated for 150 psi at 70 degrees Fahrenheit.

2.6 GATE VALVE

Gate valves shall be PVC Schedule 80, flange or union connected, as manufactured by ASAHI-America. Gate valves shall be manufactured of PVC that conforms to ASTM D 1784 Cell Classification 12454-A. All PVC valve parts to be made of high-impact PVC and rated for ANSI Class 150. Elastomers shall be EPDM. Gate valves shall have no metal to media contact, shall be a tapered cylindrical plug design, be pressure rated at 150 psi at 70 degrees Fahrenheit, have a non-rising stem, and come standard with sealed position indicator.

2.7 ACTUATED 3-WAY VALVE
The actuated 3-way valve shall be PVC Schedule 80 as manufactured by ASAHI-AMERICA. Actuation shall be electric.

2.8 Pipe Supports

Pipe supports in compound shall be metal struts as manufactured by Tyco as Unistrut or similar.

PART 3 EXECUTION

3.1 PVC PIPE, FITTINGS, AND VALVES

Piping and instruments shall be installed so as to provide easy access to the system and to provide sufficient working room.

3.2.1 Pipe

Installation and joining of pipe shall be done according to the manufacturer's instructions. Joints for PVC pipe shall be solvent cemented, unless flanged or transition fittings for dissimilar materials, as shown on the Drawings. Clean dirt and moisture from pipe and fittings, bevel pipe ends slightly with emery cloth to remove any shoulder or burrs created by cutting pipe. Primer shall be used whenever recommended by the pipe, fitting, or cement manufacturer. Solvent cementing shall not be performed whenever the temperature is 40 degrees Fahrenheit and falling.

3.2.2 Fittings and Valves

Installation of valves and fittings shall be in accordance with manufacturer's instructions. Cement that has been allowed to run from joints shall be cleaned from the pipe and fittings immediately.

3.2.3 PVC to HDPE Connections

Transitions from PVC to HDPE shall be made with PVC-to-HDPE transitions fittings or with PVC flanges to HDPE flange adapters and metal backup rings.

3.2.4 Pipe Supports

Horizontal and vertical runs of pipe in vaults shall be securely supported as shown on the drawings and as recommended by the manufacturer.

3.4 TESTS

Test of piping will include a hydrostatic filed test of the system, or portions of the system, to determine if leaks are present at the joints. Perform the test at no more than the maximum pressure rating of the lowest-rated valve or fitting. The test fluid shall be potable water at ambient temperature. Use of air for the test fluid will not be allowed. See Section 15050 HYDROSTATIC FIELD TESTS FOR PIPE for details on test pressures, duration, record keeping, repairs, and re-tests.

Test reports shall be submitted with the daily report.

-- End of Section --

HDPE Pipe, Fittings, and Flanges

PART 1 GENERAL

All polyethylene (PE) pipe, fittings, and flanges furnished under this specification shall have a Plastic Pipe Institute (PPI) material designation of PE3408, ASTM D 3350 cell classification of PE34546C (black), and a PPI hydrostatic basis of 1600 pounds per square inch at a temperature of 73.4 degrees Fahrenheit.

1.1 REFERENCES

The publications listed below form a part of this specification to the extent referenced. The publications are referred to within the text by the basic designation only.

AMERICAN SOCIETY FOR TESTING AND MATERIALS (ASTM)

ASTM D 2837	Obtaining Hydrostatic Design Basis for Thermoplastic Pipe Materials
ASTM D 698	Test Methods for Laboratory Compaction Characteristics of Soil Using Standard Effort
ASTM D 2657	Standard Practice for Heat Joining PE Pipe and Fittings.
ASTM D 2922	In Place Density by Nuclear Methods.
ASTM D 3261	Butt Heat Fusion of PE Plastic Fittings for PE Plastic Pipe.
ASTM D 3350	PE Plastic Pipe and Fitting Material, Cell Classification of High Density PE Pipe PE34546C.
ASTM F714	Polyethylene Plastic Pipe Based on Outside Diameter (Dimensional Characteristics)

PLASTIC PIPE INSTITUTE (PPI)

PE3408	Material Designations
TR-31	Underground Installation of PE Pipe
TR-3, Part F	PE Policies, Practices, and Procedures.
Chapter 6, Joining	PPI Handbook of PE Pipe
Inspections, Tests & Safety	PPI Handbook of PE Pipe
Appendix 1	PPI Handbook of PE Pipe, Underground Installation of PE Piping

1.2 SUBMITTALS

SD-07 Certifications

Manufacturer shall provide certification that pipe is in conformance with this specification per ASTM D 3350, ASTM F 714, and PPI TR-3.

The vendor shall certify that each pipe length is marked with the manufacturer's name, pipe size, SDR or Ring Stiffness Constant Classification, Production Code designating the plant location, machine, and date of manufacturer.

1.3 STORAGE

All pipe and accessories shall be stored on flat, level ground with no rocks or other objects under the pipe. For pipe up to 18-inches in diameter, the allowable stacking height is four rows high.

PART 2 PRODUCTS

2.1 PIPE AND FITTINGS
Pipe and fittings shall be manufactured from material meeting the requirements of Sections 1 through 1.1. Both pipe and fittings shall carry the same pressure rating. All fittings shall be pressure rated to match the system piping to which they are joined. At the point of fusion, the outside diameter and minimum wall thickness of the fitting shall meet the outside diameter and minimum wall thickness specifications of ASTM F 714 for the same size pipe. The manufacturer shall certify that the materials used to manufacture pipe and fittings meet the requirements of this specification.

Butt fusion fittings shall comply with ASTM D3261.

Pipe and fittings shall be butt fusible according to the manufacturer recommended procedures.

2.2 STANDARD DIMENSION RATIO

The standard dimension ratio (SDR) for solid wall pipe shall be SDR-11, or as otherwise indicated on the drawings.

PART 3 EXECUTION

3.1 JOINING

Fusion of pipe and fittings and the installation of pipe shall be in strict accordance with the manufacturer's technical data and printed instructions and in accordance with the PPI handbook "*Polyethylene Joining Procedures*". Field butt fusion shall be made by trained personnel using fusion machines that secure and align the pipe ends for the fusion process.

Butt fusion will be the method used for field joining pipe and fittings, except when flanged connections are required in the design.

Butt fusion joining will include these steps: securely fasten components to be joined; face the pipe ends; align the pipe profile; melt the pipe interfaces; join the two profiles; hold pressure; inspect joint; accept or reject joint. Extrusion welding will not be used in the field.

3.2 BURIED PIPE
Trench width, length, bedding, floor preparation, haunching, backfill, and compaction will be as shown on the drawings and plans.

3.3 PIPE LAYING

Before laying pipe, trench bottoms and sidewalls will be prepared, and bedding will be placed as shown on the drawings.

3.3.2.2 HDPE Pipe Installation in Trenches

For HDPE pipe placed into the trenches, 6 inches of bedding material (3/4-inch crushed rock) will be placed in the bottom of trenches and will be compacted using the method described above. HDPE pipe will be placed onto the bedding material. Haunching material will be placed carefully around the pipe. Initial backfill (crushed rock) will be placed around and 6-inches above the pipe and will be compacted. Final backfill material will consist of the native excavated soil, providing it is free of unsuitable matter such as debris, boulders, or lumps of clay. Place plastic warning tape 18-inches above the pipe as shown on the drawings. Final backfill material will be compacted to 90% Modified Proctor in Roadways (Perimeter Road, Marine Way, and the access road to the compound), 90% Standard Proctor in other areas, or as otherwise indicated on the Drawings.

3.4 TESTING - GENERAL

The interior of all pipe surfaces shall be kept clean. Carefully inspect interiors and remove all rags, earth, trash, and foreign matter before testing is initiated. All joints will be inspected for integrity prior to leak testing. The pipe system section under test should be restrained against sudden uncontrolled movement due to catastrophic failure. Take suitable precautions to eliminate hazards to personnel near lines being tested.

Testing may be conducted on the full system, or in sections. The temperature of the test medium and the pipe test section should be the same, and should be at ambient temperatures.
Test pressure may be limited by valves, or other lower pressure rated components. If components may not withstand the test pressure, they should be removed or isolated from the test section to avoid damage or failure. Isolated equipment should be vented. If a component cannot be removed or isolated, then the test pressure is limited to the pressure rating of the component.

The maximum allowable test pressure is 1-1/2 times the system design operating pressure at the lowest point in the section under test.

For any test pressure from 1 to 1-1/2 times the system design pressure, the total test time including initial pressurization, initial expansion, and time at test pressure, must not exceed eight (8) hours. If the test is not completed due to leakage or failure, then depressurize the test section and allow the section to relax for at least eight (8) hours before bringing the test section up to test pressure again.

3.5 HYDROSTATIC TESTING USING NON-MONITORED MAKE-UP WATER TEST

Use clean water. Fill the test section completely with water. Bleed off any trapped air. While the test section is filling, vent the section at the high points to purge the air pockets.

The test procedure will consist of the initial expansion and the test phases. For the initial expansion, makeup water is added to maintain the test pressure for three (3) hours. For the test phase, the test pressure is reduced by 10 pounds per square inch. If the pressure remains steady for an hour, no leakage is indicated.
Document test results. Repair leaking sections and retest. Document repairs and retests.

Submit test results in with the daily report.

--- END OF SECTION --

Vapor Phase Carbon Vessel

PART 1 GENERAL

The vapor phase carbon vessels will be suitable for the conditions of service (flow rate, temperature, and pressure) at the compound and at multiphase wells.

1.1 SUBMITTALS

SD-03 Product Data

Catalog cuts sheets, illustrations, diagrams, instructions and brochures illustrating size, physical appearance and other characteristics of the vessels.

The vendor shall transmit the product data, dimensions, and diagrams within 10 days of receipt of signed purchase order from Weston Solutions, Inc.

PART 2 PRODUCTS

2.1 VESSELS

Each granulated activated carbon vessel shall be capable of holding a minimum of 100 pounds of vapor phase carbon, with a maximum flow rate of 250 standard cubic feet per minute. The vessels shall be rated for maximum pressure of no less than 15 psig and a maximum vacuum of 18 inches Hg at 140 degrees Fahrenheit. Inlet and outlet connections shall be 2-inch. Internal distribution shall be PVC. Exterior top coat shall be enamel.

The vessels shall be manufactured to UN specifications and shall meet the requirements as transportation containers for spent carbon.

PART 3 EXECUTION

Not used

--- END OF SECTION --

SECTION 16010

GENERAL ELECTRICAL REQUIREMENTS

PART 1 GENERAL

1.1 INCLUSION OF GENERAL CONDITIONS

The applicable provisions of Division 1; and the General Conditions, Supplementary Conditions, and General Requirements are a part of these specifications, as noted therein.

1.2 SCOPE OF WORK

Provide labor, materials, equipment, transportation and perform operations necessary or incidental to the proper execution and completion of the electrical work, whether specifically mentioned or not, and as directly indicated or reasonably implied by the Drawings and Specifications.

Work specified in Division 16:

Section 16050: Basic Electrical Materials and Methods.

Section 16400: Service and Distribution.

1.3 RELATED WORK

Work specified in other Divisions:

Section 02222: Excavation, Trenching, and Back-filling
Section 03300: Cast-in-Place Concrete.

1.4 WORK NOT INCLUDED

Refer to the specific Division 16 Sections for a detailed listing of work that is not included in this Contract.

In any case, cooperate with the other trades who may or may not be party to this Contract for the purpose of coordinating the electrical requirements and installation of equipment, materials, and furnishings provided by those other trades, including the Owner.

1.5 CODES AND STANDARDS

Provide equipment and materials which conform to, and perform the installation thereof in accordance with the following codes and industry standards. The applicable version of each shall be that in effect as of the date of the Contract:

California Electrical Code (CEC).
Titles 8, 19 and 24 of the California Code of Regulations (CCR).
American National Standards Institute (ANSI).
California State Fire Marshal (CSFM).
Underwriters' Laboratories (UL).
National Electrical Manufacturers' Association (NEMA).
Institute of Electrical and Electronics Engineers (IEEE).
National Electrical Safety Code (NESC).
Electrical Safety Orders.
Other applicable local codes and ordinances.

Where the authority-having-jurisdiction makes an interpretation or decision, as is their prerogative in accordance with the Code, such direction shall be considered a part of these Contract Documents as if contained herein. With respect to completing the intent of the Contract Documents, comply with any and all requirements of the authority-having-jurisdiction and utility company field inspectors, at no additional cost.

The above referenced codes and standards are considered to be absolute minimum requirements. The Drawings and Specifications shall take precedence over the above referenced codes and standards where materials or workmanship of higher quality or larger size is indicated. Nothing in these Drawings or Specifications shall be construed to allow work not conforming to the applicable codes and standards.

1.6 REVIEW OF CONTRACT DOCUMENTS

Examine all relevant Contract Documents including Drawings, Specifications, and Shop Drawings in order to become acquainted with the Work of other installers whose activities will adjoin or be affected by the Electrical Work.

1.7 PERMITS, LICENSES, AND FEES

Procure and pay for all permits, licenses and fees that are required to carry out and complete the Electrical Work.

Pay for building department or utility company imposed inspection fees.

Pay utility company charges for normal or after hours shutdowns, service calls, repairs, and cable locating that are directly related to the installation of the Electrical Work.

1.8 UTILITY COMPANY CHARGES

Do not include in the Contract Sum development or capital equipment charges imposed by the Power, Telephone, or CATV utility companies. Such charges include excess conductor charges, up-and-down charges, developer fees, Secondary MPOE charges, and service activation fees.

1.9 SITE VERIFICATION OF INFORMATION

Visit the project site prior to submitting a bid and verify the condition, location and dimensions of buildings, equipment, and facilities. Become acquainted with conditions under which the Work is to be performed and which may affect the cost thereof.

Verify at the project site, the accuracy of information shown on the Drawings regarding existing equipment, materials, and facilities. This includes but is not limited to: size, type, rating, quality, age, and serviceability. No allowance will be made on behalf of the Contractor for extra expenses resulting from the failure to discover conditions affecting the Work.

1.10 WORKING SPACE

Maintain adequate work space around, and access to, electrical and mechanical equipment in strict accordance with the applicable Codes. Verify during the course of construction that sufficient space will be available for the installation equipment, fixtures, etc.

1.11 MATERIALS AND SUBSTITUTIONS

Materials shall be new, high quality, free from defects, of standard make, and of the brand or grade as shown on the Drawings or specified herein. Specific trade names are used in the Drawings and Specifications in order to establish the standard grade and characteristics of said items. This does not imply the right upon the part of the Contractor to use other materials or methods without the approval of the Architect.

Electrical materials and equipment shall bear the label of, or be listed by, the Underwriters' Laboratories (UL) wherever standards have been established and label service is regularly furnished by that agency. Comply with the installation and application requirements of UL as documented in their published directories.

Unless specifically noted, equipment and systems shall be the product of a manufacturer who has been in the manufacture of, and has nationally distributed catalogs covering the ratings and specifications of, said equipment or systems, for a period of not less than five (5) years.

Maintain uniformity throughout the Project by making use of only one make or brand of material for each material used.

Substitutions of materials or methods will only be allowed if such items are approved in writing by the Owner as equal in quality and utility to the specified items. Submit a list of proposed substitutions within thirty (30) days of the award of the Contract. Include on the list the original manufacturer's name and model number, the proposed manufacturer's name and model number, catalog cut sheets, ratings, sizes, performance curves, shop drawings, and other data as may be required to demonstrate equality to the specified item.

The approval of a substitution does not authorize any deviation from the utility, size, function, or durability of the specified item unless specifically pointed out and requested in the proposed substitution list, and said deviation is approved in writing by the Architect. Responsibility of the Contractor for dimensional considerations or space conflicts are not relieved by the approval of a substitution.

If requested by the Architect, submit samples of materials and equipment for approval prior to installation.

1.12 ELECTRICAL SUBMITTAL

SD-02 Shop Drawings

See the General Conditions for conditions of submittal approval and general requirements for submission of shop drawings.

Submit a minimum of five copies (or more as required by the General Conditions) of electrical shop drawings and manufacturer's cut sheets for equipment and materials as noted in each Division 16 specification section. Bind the submittals as complete volumes according to classification of equipment such as power, lighting, fire alarm, etc. When possible, make all electrical submittals at the same time.

Submit shop drawings and supporting data as instruments of the Contractor. Stamp each item in the submittal documents with the Contractor's stamp, thereby stating that the equipment meets all requirements and conditions of the Drawings and Specifications. In particular, certify that the items shown on the shop drawings conform to the dimensional, environmental, and space restrictions as pertains to all work under this Contract and the work of other parties in conjunction with this Project.

Provide a blank space on the title page of each submittal classification for the Architect's or Engineers approval stamp and comment field. The minimum size of such space shall be eight inches wide by five inches high.

Arrange panelboard submittals to show bussing, circuit numbering, and branch circuit protective devices similar the schedules on the Drawings. Show elevations of switchboards, motor control centers, and distribution centers indicating the layout of devices, meters, handles, etc. Provide device ratings, circuit numbers, and nameplate descriptions in table form. Include terminal strip mounting arrangements on elevations for terminal cabinets.

SD-07 Test Reports

WESTON shall submit the results of field tests as an attachment to The Daily QC/Production Reports.

1.13 DRAWINGS AND SPECIFICATIONS

The data and information contained on the Drawings is as accurate as was reasonably possible at the time they were produced, but absolute accuracy is not guaranteed. Exact locations, distances, elevations, etc., will be dictated by the actual building and the conditions at the site.

The layout of electrical equipment, wiring, and accessories is shown in a diagrammatic fashion (not pictorially) in order to achieve clarity and legibility. Although the size and location of electrical equipment is drawn to scale wherever possible, refer to all data in the Contract Documents and field verify this information as the project progresses. Examine architectural, structural, mechanical, and other drawings to determine the exact location of conduits, outlets, fixtures, and equipment and to note any conditions which may affect the electrical work.

The Drawings and Specifications may be superseded by later detail drawings and specifications prepared by the Architect. Conform to such detail drawings, specifications, addenda, change orders, other reasonable changes as if they are contained herein. See the General Conditions for change order cost considerations.

Because the Electrical Drawings may be distorted for clarity of representation, it may be necessary to field verify the exact location of electrical outlets, lights, switches, etc. in order to conform to the architectural elements. The Architect reserves the right to make minor changes to the locations of equipment, devices, and wiring shown on the Drawings, at no additional cost, providing the changes are ordered before the rough-in of conduit, boxes, or related items is completed, and no extra material are required.

For dimensional and locational purposes, the Architectural Drawings take precedence over the Electrical Drawings. Determine the appropriate location of lighting fixtures, outlets, wall-mounted devices, etc. by studying the reflected ceiling plans, building sections, and interior elevations. Report conflicting conditions to the Architect before rough-in for adjustments to the locations.

Conduit quantities, sizes, termination points, and wiring are depicted on the Electrical Drawings. However, not all conduit bends or routing details are necessarily shown. Route conduit so as to conform to the structural conditions, avoid obstructing other trades, maintain space restrictions and keep circulation areas and access openings clear.

Thoroughly examine the Contract Documents prior to submitting a bid in order to determine electrical requirements which are not necessarily indicated on the Electrical Drawings. Include sufficient allowance in the bid sum to cover the costs of these other requirements.

Should the Contractor perceive that the Drawings and Specifications do not sufficiently define the intent of electrical work, contact the Architect for clarification or additional information. The absence of such contact will be considered as evidence of understanding, on the part of the Contractor, of the intended Electrical Work and the required installation thereof.

1.14 WORKMANSHIP

Constantly supervise the work personally or through an authorized and competent representative. Keep the same foreman or supervisor on the project from commencement through completion.

Perform the Electrical work using the highest caliber craftsman available. Workmanship shall be first class and of the best quality available to insure a long and trouble free service life. Allow only experienced and competent workmen on the job.

1.15 COOPERATION AND COORDINATION

Consult with the other installers and trades in coordinating the Work so as to avoid conflicts, omissions and delays. Cooperate with other contractors, third parties, and the Owner in order to expedite the project and provide for the proper execution of the building as a whole. Work performed without regard to other trades or the overall project scheme, may necessarily be required to be moved at the Contractor's expense.

1.16 MANUFACTURER'S DIRECTIONS

Adhere to the manufacturer's directions regarding the proper installation and configuration of electrical equipment where those directions cover points not included in these Drawings and Specifications.

1.17 PROTECTION AND STORAGE

Deliver electrical materials to the site new, and in unbroken packages. Provide for the temporary storage of such materials, equipment, and construction tools in accordance with the General Conditions. Protect electrical equipment and materials during transit, storage and handling to prevent damage, soiling and deterioration.

During shipping storage and handling protect electrical materials from damage of any type including dust, water, over-spray, and temperature. Avoid damage during construction to the work and materials of other trades as well as the electrical work and material. Repair or replace, at the Contractor's expense, defective or damaged items such that the entire Work is completed in a condition satisfactory to the Architect.

1.18 EXCAVATION, CUTTING, PATCHING, AND REPAIR

Perform excavation and backfill required for the installation of electrical sub-structures. Restore grounds, walkways, roadways, curbs, walls, and other existing underground facilities to their original condition.

Conform to the applicable requirements of Section 1, Site Work, in the selection, placement, and compaction of backfill material and finished surfaces.

Cut, core-drill, and demolish existing walls, floors, ceilings and other building surfaces as required for the installation of Electrical Work. Obtain the approval of the Architect prior to performing any operation which may affect any structural elements of the building.

Patch and repair wood, plaster, tile, or concrete surfaces which have been damaged by the installation of the Electrical Work so that the finished surface matches the surrounding conditions.

1.19 FLASHING, WATERPROOFING AND SEALING

In general, install in an approved watertight manner, Electrical Work which pierces exterior walls or waterproofing membranes. Flash and counter-flash roof and wall penetrations in a manner described in other applicable sections of this Specification and as approved by the Architect.

Fit conduits passing through finished walls with steel escutcheon plates of brass, chrome, or painted finish as directed by the Architect. Grout penetrations of floor slabs, concrete or masonry walls with an approved grout or silicone elastomeric caulk.

1.20 IDENTIFICATION OF EQUIPMENT

Label the following electrical equipment with nameplates which clearly identify each item, the function or use of the item, and the circuit identification of the feed to the item:

Switchboards.
Individual Circuit Breakers in Switchboards.
Panelboards.
Control Panels.
Terminal Cabinets.
Disconnect Switches and Enclosed Circuit Breakers.
Individual Motor Starters.
Contactors and Relays.
Special Function Pushbuttons and Switches.

Nameplate material shall be laminated phenolic plastic, white front and back with black core. Engrave the inscription through to the black layer. Embossed plastic pressure sensitive labels are not acceptable.

As an alternative to separate nameplates, device plates may be engraved directly with lettering filled with black enamel.

Fasten nameplates to the equipment with #4 phillips round head cadmium plated steel self-tapping screws, brass bolts, or with a plastic resin adhesive glue, Goodyear "Pliebond" or equal.

1.21 CLEANING, ADJUSTING, AND TOUCH-UP

Remove on a daily basis electrical debris, scraps, packaging material and other rubbish. Dispose of such items off-site in an approved manner and debris. Maintain the site free from physical hazards at all times in accordance with OSHA regulations. See the General Conditions for additional requirements.

After installation, completely clean electrical equipment, fixtures, and materials of excess paint, over-spray, plaster, cement, insulating products, and other foreign matter. Leave the Electrical Work in a clean, finished, dry, level, like new condition.

Touch-up paint scratches and scuffs on electrical equipment and lighting fixtures with paint recommended by the manufacturer and matching the original item finish.

Make setting, adjustments, and programming in accordance with the manufactures' operating and installation instructions. Settings and program variables will be issued by the Owner prior to commissioning of the electrical system.

1.22 AS-BUILT DRAWINGS

Throughout the project, maintain accurate and current record documents. Show on the record drawings deviations from the Electrical Drawings, locations of underground conduits and pull-boxes, and concealed equipment which is not readily apparent. Dimension the record drawings using permanent, readily identified benchmarks such as column or wall lines.

At the completion of the project, present one clearly legible set of the record drawings to the Owner.

1.23 INSPECTIONS AND TESTING

Arrange for the inspection of the Work at various stages of completion by the Authority Having Jurisdiction, utility company representatives, and the Architect. Comply with all directions and remedial measures issued thereby. Any objections to these orders on the part of the Contractor must be presented to the Architect in writing within forty eight (48) hours of the inspection report.

Coordinate the installation of the Work so that observation of all rough-in, concealed, or underground Work can take place by the Architect. Provide a minimum of seventy two (72) hours notice to the Architect prior to covering up the work. Uncover Work that has not been properly observed and make repairs to restore the Work and adjoining surfaces to their proper condition at no additional cost.

Perform tests of the electrical system during the course of the project and at project completion to ensure safe and proper function in accordance with the Contract Documents, manufacturers' recommendations, and applicable codes. Provide complete documentation of all test results to the Owner prior to project completion. Testing shall include, but not necessarily be limited to, the following:

Test for short circuits, open circuits, neutral leakage, and improper grounds on feeders and branch circuits. Perform this test with mains in disconnect from feeders, branch circuits closed, fixtures and devices permanently connected, lamps removed from sockets and wall switches closed.

Provide insulation resistance tests of all phase and neutral circuit conductors using a 500 Volt Megger for circuits of 240 Volt rating and below, and a 1000 Volt Megger for circuits of 277 volts and above. Minimum acceptable insulation resistance is one (1) megohm.

Perform a ground resistance test of each main grounding electrode system, ground rod, and supplemental grounding electrode. Utilize a calibrated, direct reading, earth ground test set and make the tests using the "Three-terminal, Fall-of-Potential" method. The maximum allowable earth ground resistance is 25 ohms.

Test for proper phase-to-phase and phase-to-neutral operating voltage on the main service and on each separately derived system. Perform this test at full load and at no load. With all circuits at full operating conditions, test the phase and neutral load currents using a clamp-on ammeter.

Tests as required by other sections of these Specifications.

Tests as prescribed by individual equipment manufacturers whether or not described in these Specifications.

At project completion, demonstrate to the Owner that the entire installation is complete, in proper operation condition and that the Contract has been properly and fully executed. Activate all circuits, lights, devices, and controls under full load and normal operating conditions. Identify faulty items and immediately replace or repair defective equipment, workmanship, and materials to like new condition and retest in the presence of the Architect.

At the completion of the Project, demonstrate to the Owner that the entire electrical system is free from short circuits and improper grounds. or upon request of the Owner t anytime, make necessary tests under the observation of the Owner which will ensure that electrical equipment, materials and installation methods are as specified.

1.24 GUARANTEE

Acceptance of the Contract for this work includes, at a minimum, the following guarantee:

The Contractor guarantees that he has performed the work in accordance with the Contract Documents. Contractor agrees to replace or repair, as new, any defective work, materials, or part which may appear within one (1) year of final acceptance if in the opinion of the Owner the defect is due to workmanship or material.

1.25 WARRANTIES, CERTIFICATES, AND OPERATING MANUALS

Properly fill out and deliver to the Owner, all warranties, guarantees, certificates, etc. for equipment and materials that are furnished and installed under this Section of the Work. The effective date on each item shall be the date of acceptance of the work by the Owner.

Deliver to the Owner, a minimum of two (2) copies of the manufacturers' operating and maintenance manuals for major items of equipment.

PART 2 PRODUCTS

2.1 (NOT USED IN THIS SECTION.)

PART 3 EXECUTION

3.1 (NOT USED IN THIS SECTION.)

END OF SECTION

SECTION 16050

BASIC ELECTRICAL MATERIALS AND METHODS

GENERAL

1.1 INCLUSION OF GENERAL CONDITIONS

The applicable provisions of Division 1; and the General Conditions, Supplementary Conditions, and General Requirements are a part of these specifications, as noted therein.

1.2 SCOPE OF WORK

Raceways, ducts, and wireways.

Junction, outlet, and pull boxes.

Conductors, cabling, terminations, splices.

Terminal cabinets and terminal strips.

Individual disconnect switches and enclosed circuit breakers.

Motor starters, contactors, and controls.

Support structures for electrical items.

Vibration isolation materials and assemblies.

Equipment connections.

Grounding and bonding.

Wiring devices, device plates, and covers.

1.3 RELATED WORK

Section 16010: General Electrical Requirements.

1.4 SUBMITTALS

SD-03 Product Data

Provide submittals for the following:
- Junction boxes other than NEMA 1.
- Junction boxes larger than 6"x6".
- Terminal cabinets and terminal strips.
- Wireway, and gutters.
- Surface raceway.
- Disconnect switches and enclosed circuit breakers.
- Motor starters, contactors and controls.
- Wiring devices and device plates.

PART 2 PRODUCTS

2.1 WIRING MEIHODS

All wiring shall be installed in raceways unless otherwise noted on the Drawings. Type NM, SE, UF, AC, and MC cabling and other cables, cords, or wiring not installed in raceways are not acceptable regardless of whether allowed by the Code.

2.2 GENERAL RACEWAYS

Acceptable raceway systems and their limitations of use are summarized in the following table:

Conduit Application Table

	RSC	RNC	EMT	FMC	LFMC
Exterior locations: Wet or subject to physical damage.	Yes	No	No	No	No (note 3)
Exterior locations: Damp and not subject to physical damage.	Yes	No	No	No	Yes
Interior locations: Wet or subject to physical damage.	Yes	No	No	No	No (note 3)
Interior locations: Exposed and not subject to physical damage.	Yes	No	Yes	No	Yes
Interior locations: Totally concealed.	Yes	No (note 4)	Yes	No	No
Underground: See 16050-3.01.	Yes	Yes	No	No	No

Notes for Conduit Application Table:

1. RSC = rigid steel conduit, RNC = rigid nonmetallic conduit, EMT = electrical metallic tubing, FMC = flexible metal conduit, LFMC = liquidtight flexible metal conduit.
2. For the purposes of these specifications, locations subject to physical damage include, but are not limited to, those areas less than 6 feet above the finished floor or grade.
3. Liquidtight flexible metal conduit may also be use in wet or damp, exterior or interior locations not subject to physical damage, where used for flexible equipment connections in lengths not exceeding 3 feet.
4. Rigid nonmetallic conduit may also be used above grade, where totally concealed in walls, for transitions from underground up to a height of 24 inches above the concrete sill.
5. The use of flexible metal conduit is limited to lengths not exceeding 6 feet for flexible connections to equipment and lighting fixtures, or where necessitated by structural obstacles and explicitly approved by the Architect.

Rigid steel conduit:

Full weight, hot-dipped galvanized, rigid steel.
Threaded fittings, finished similar to conduit. Thread-less or compression fittings are not acceptable.
Coat threads on fittings with red lead or anti-seize compound prior to installation, except in the case of explosion-proof installations, where no compound shall be used.
Tape underground portions and transition sections with half lapped 10 mil PVC tape extending 6 inches beyond the transition.
Provide plastic bushings on all rigid conduit connections made up with lock-nuts.

Rigid nonmetallic conduit:
Schedule 40 PVC in minimum trade size of three-fourths inch (¾").
Thoroughly clean, prep, and solvent weld joints.
Make transitions to metal conduit with approved threaded adapters.
Underground conduit for SCE or Pacbell service laterals may be type DB 120 as approved by those utilities.
Make exposed transitions to above-grade using rigid

Electrical metallic tubing:
Rolled steel, zinc coated outside with either zinc coating or other approved corrosion resistant finish on the inside.
Set screw steel, or compression type fittings. Die-cast or indent style fittings are not acceptable and the use of these fittings anywhere on the Project will constitute grounds for requiring the uncovering of the Work throughout the entire Project.
Provide insulated throat box connectors or insulated bushings on conduits larger than one and one-quarter inch (1¼") or carrying conductors of size #8 AWG or larger.
In damp locations, use approved watertight, compression type fittings.

Flexible metal conduit:
Galvanized flexible steel conduit, minimum trade size is one-half inch (½").
Insulated throat fittings, T & B "Tight-Bite" or equal.
Install in the minimum practical length, so as to allow movement of equipment without restricting the flexibility of the conduit. Maximum permissible length is six feet.
Do not make transitions from other conduit type in the middle of a run; connect only at junction boxes and wiring boxes.

Liquidtight flexible metal conduit:
Seal-tight, neoprene covered, liquidtight flexible conduit with a steel core.
Minimum trade size is one-half inch (½").
Compression type, insulated throat fittings. Non-metallic fittings are acceptable.
Install in the minimum practical length, so as to allow movement of equipment without restricting the flexibility of the conduit. Maximum permissible length is three feet.

Provide an insulated equipment grounding conductor sized per Code requirements in all branch circuit and feeder conduits whether or not shown on the Drawings. This applies to both metallic and non-metallic conduits.

2.3 JUNCTION, OUTLET, AND PULL BOXES

Provide boxes of the size required by the Code, or larger. Boxes shall be fabricated of galvanized code gauge steel shall be approved for its particular location and function.

Galvanized code gauge sheet steel boxes may be used where pull boxes larger than outlet boxes are required. Boxes exposed to the weather shall be approved for the purpose and conduit entrances on the side or top shall be made by means of myers-type hubs. Boxes exposed to the weather shall be gasketed NEMA 3R with screw covers.

Use type FS or FD cast outlet boxes for exterior outlet and switch boxes. Provide threaded hubs of the proper quantity and size. Covers, plates, and operators shall be weatherproof and equipped with gaskets for a moisture tight seal. Where indicated, device covers shall be of the "Weatherproof In Use" type, so that an apparatus plug may be left in the receptacle with the cover closed.

Flush mounted outlets, switches, devices, and boxes shall be finished with brushed stainless steel cover plates. Cover plates for surface devices, in interior areas shall be raised, rounded edge, stamped galvanized steel, with grounding straps. Completely conceal the cutout of the box behind the cover plate; voids, plaster, or unfinished surfaces around plates will not be acceptable.

2.4 WIREWAYS

Provide enamel painted, coed gauge steel wireways, NEMA 4 or NEMA 4X as appropriate for the application. Utilize gasketed hinged covers with latches or fasten covers to the body of the wireway with machine screws. The minimum wireway size is 4"x4".

2.5 SURFACE RACEWAYS

Provide non-metallic surface raceways as indicated on the Drawings. Surface raceway shall be divided style for power and telecommunications use. The nominal raceway dimension is 5¼" x 1¾". Provide with covers, device-mounting brackets, end caps, elbows, feed fittings, and other accessories as necessary for a complete and finished installation. Surface raceway shall be Wiremold #5400 series.

2.6 CONDUCTORS

Provide copper conductors, 600 volt rated, type THHN/THWN/MTW. All conductors shall be stranded. The smallest conductor size permitted for line voltage branch wiring is #12 AWG.

Control wire for 120 volt controls may be #14 AWG.

For branch circuit splices connecting #10 AWG wire and smaller, provide 3M "Scotchlok", or Ideal wire nuts.

For feeder splices use compression type connectors insulated with heat-shrink sleeve.

2.7 GROUNDING ELECTRODES AND CONNECTORS

Ufer (Concrete Encased) Grounding Electrodes shall of the size as noted on the Drawings. Encase a minimum of twenty feet of bare copper conductor in a least two inches of concrete in contact with the earth.

Ground Rods shall be ¾" x 10' Copper-weld steel ground rod. Drive vertically, for the full length of the rod, except for the connector.

Ground clamps and connectors shall be OZ-Gedney type ABGO, bronze pressure connectors.

2.8 WIRING DEVICES

Wiring Devices: Leviton, Hubbell, Pass & Seymour. Colors shall be determined by the Architect.

Light switches, SPST:	Leviton #1221.
Duplex receptacles:	Leviton #5262.
GFCI receptacles:	Leviton #6599.

2.9 DISCONNECT SWITCHES

Visible blade, heavy duty safety switch,600 volt rated, externally operable, horsepower rated, with dual cover interlock, and provision for padlocking. Provide a minimum of one pole per phase conductor. Enclosures shall be of the appropriate NEMA rating for the environmental conditions at the point of application. Where the manufacturers nameplate on a particular piece of equipment specifically requires the use of fuses, or where indicated on the drawings, utilize fusible disconnect switches. Otherwise, provide non-fusible disconnect switches, sized according to Code requirements for the load served.

Provide an integral grounding terminal in the enclosure for the termination of equipment grounding conductors on the line and load feeds to the switch. Where the feeder to the switch also contains a neutral conductor, provide an insulated neutral terminal lug, unless the Drawings indicate the use of a 4-pole switch.

Single phase motors, 240 Volts or less, and smaller than one-half horsepower (½ HP), shall be permitted to use toggle style, HP rated snap switches with lockable operators. Provide one pole per phase conductor. The minimum switch rating shall be 20 Amps.

Where switches are of the fusible type, provide dual element, time delay fuses; Bussman Low Peak type LPS-RK-SP or Fusetron type FRS-R for 600 Volt circuits; and Bussman Low Peak type LPN-RK-SP or Fusetron type FRN-R for 250 Volt circuits. Fuse ratings shall be as indicated on the Drawings or as required by the equipment manufacturer's nameplate.

2.10 CONTROL PANELS AND STARTERS

Motor starters shall be across the line, full voltage, combination magnetic type, three phase, 600 volt, 60 Hertz, NEMA size 0 minimum size, with a NEMA 4X enclosure and a flange mounted fusible disconnect switch. Each starter shall be provided with a 120 volt single phase control transformer and three (3) interchangeable thermal trip elements. The control transformer shall be a two winding type rated 480/120 volts with a fused and grounded secondary control circuit. A normally open and a normally closed auxiliary contact shall be provided in addition to the seal-in contact and other contacts provided to obtain the operation indicated. Combination motor starters shall be as manufactured by Cutler Hammer Electric Corporation, Allen Bradley Company, Square D Company, General Electric or as approved by Owner.

Each magnetic starter shall be provided with three (3) thermal overload relays manually resetable with the door closed. Thermal overload heaters will be sized per motor full load currents. The overload relay shall trip in 10 seconds or less at 600% rated current. Relays shall be ambient compensated. Overload trip indication shall be provided by an auxiliary relay wired from the control power ungrounded side to the contactor side of the overload relay contacts. This relay shall have 2 N.O. and 2 N.C. contacts wired out to terminal blocks.

External operating handles for the fusible switch on combination motor starters shall be mechanically interlocked so that the operating handle must be in the "off" position before the associated compartment door can be opened. Each operating handle shall be designed for padlocking in the "off" position with up to three (3) padlocks. The operating handle shall be flange mounted. Through-the-door type operators will not be accepted for any application.

Manual motor starters for single phase motors shall be General Electric Company, Catalog No. CR-101, or equal as manufactured by Westinghouse Electric Corporation, Allen Bradley Company, or the Square D Company.

2.11 UNDERGROUND PULL BOXES

Underground pull boxes shall be, precast concrete boxes with bolt down steel lids. Provide necking and extensions as required to achieve proper box depth and to set the box relative to the finished grade. Also provide bases where indicated on the Drawings. Acceptable manufacturers are Christy, Brooks, or Associated Concrete Products. Provide H-20 loading rated traffic covers in streets, driveways, alleys, parking lots where subject to vehicular traffic.

Identify each pull box with engraving or cast-in lettering on the lid. The identification shall clearly indicate the nature of the wiring and systems contained within, such as: Power, Lighting, Telephone, Controls, etc.

PART 3 EXECUTION

3.1 RACEWAYS

Install conduits concealed within the building structure wherever possible. Where it is necessary to install conduits exposed, keep the conduits tight to the structure and install parallel to, or a right angles to, the structural elements. Install and make up complete the entire raceway system, and have it inspected prior to the installation of conductors.

Fasten conduits to surfaces using two hole stamped steel straps or one or two hole plated malleable iron straps. The use of perforated strapping, nails, or nail type conduit straps is prohibited. Secure to hollow masonry using toggle bolts, to solid masonry or concrete using expansion shields and machine screws, self tapping machine screws (Teks) on metal, and wood screws on wood. Fasten conduits securely to the structure within three feet of junction box, fitting, or connection, and thereafter, at a maximum of ten feet on center.

Support conduits in the open using threaded rod and split rings for individual runs. Group mount multiple conduits on strut channel (Kinline, B-Line, or Unistrut) fastened to the surface or trapeze suspended from the structure using threaded rod hangers. Use beam clamps to fasten individual conduits to structural steel elements. In all cases, support conduits independently from one another.

In general, the minimum bend radius for conduits is ten (10) times the diameter of the conduit trade size. Do not reduce the cross sectional area of conduits during the bending process. Cut conduit ends square and de-burr the ends with a proper reaming tool.

The allowable maximum aggregate of bends in any underground conduit run is 270 degrees. Additionally, keep the horizontal bend radius for underground conduits to not less than 60" for three inch trade size and larger, and not less than 24" for conduits smaller than three inch trade size. Where conditions dictate the use of smaller radius bends, such as vertical risers, make the bend with as large a radius as possible, or use factory rigid metal conduit elbows.

The minimum burial depth for underground feeder conduits outside of building lines shall be 36" inches below finish grade. Provide a sand bedding and topping, as indicated on the Drawings, or at a minimum, 4" below and 6" above. Rock-free native soil may be used for remainder of the backfill. Backfill and compact trenches to 90% density and remove excess material from the Project Site. See the Structural and Architectural Drawings for special requirements where conduits pass through, near, or beneath, building footings, pads or grade beams.

It shall be permissible to install under-slab branch circuit conduits on top of the earth, but beneath the pea gravel base of the concrete slab. Depress conduits into the earth where necessary to maintain complete coverage due to obstructing pipes, conduits, etc. Provide temporary conduit supports independent of steel reinforcing bars for conduits in structural concrete. Cap empty conduits during construction.

Equip empty conduits, "Conduit Only", and partially filled telecommunications and data conduits, with 3/16" polypropylene pull lines.

3.2 WIREWAYS

Install wireways orthogonal to, and level with architectural elements. Fasten to wall structures securely and provide blocking or backing plates as required... Make up with joints and seams neat and clean, without gaps or rough edges.

3.3 CONDUCTORS AND CONNECTIONS

Included all strands of the conductors within splices or connection and terminate in such a manner so that no strain is put on the termination.

Color code conductors including each phase, neutral and ground conductor at each termination and junction point. Use colored insulation or colored plastic tape markings, as follows:

208Y120 volts:
Phase A: Black
Phase B: Red
Phase C: Blue
Neutral: White or Gray
Ground: Green
Isolated Grounds: Green with Yellow Stripes
480Y277 volts:
Phase A: Brown
Phase B: Orange
Phase C: Yellow
Neutral: White or Gray
Ground: Green
Isolated Grounds: Green with Yellow Stripes

3.4 GROUNDING AND BONDING

Ground and bond the entire facility in accordance with the Code and as indicated on the Drawings.

Provide an insulated equipment grounding conductor sized per Code requirements in all branch circuit and feeder conduits whether or not shown on the Drawings.

Bond the following systems within the building if they exist and provide bonding jumpers to the grounding electrode system:
Metallic cold water piping system.
Fire sprinkler metallic riser mains.
Steel structural columns.

END OF SECTION

SECTION 16400

SERVICE AND DISTRIBUTION

PART 1 GENERAL

1.1 INCLUSION OF GENERAL CONDITIONS

The applicable provisions of Division 1; and the General Conditions, Supplementary Conditions, and General Requirements are a part of these specifications, as noted therein.

1.2 SCOPE OF WORK

Power, and Control Conduits.

Underground conduit systems for service entrance facilities.

Concrete pad for SCE transformer.

Service equipment including main switchboard, metering, and auxiliary equipment.

Feeders, pull-boxes, and support structures for on-site power and signal distribution systems.

Dry type transformers.

Distribution switchboards, motor control equipment, and branch circuit panelboards.

Grounding and bonding systems.

1.3 RELATED WORK

Section 16010: General Electrical Requirements.

Section 16050: Basic Electrical Materials and Methods.

1.4 WORK NOT INCLUDED

(Not used in this section)

1.5 SUBMITTALS

SD-03 Product Data

Provide submittals for the following:

Service equipment including switchboards, over-current protective devices, pull boxes, and meter assemblies.
Dry type distribution transformers.
Distribution switchboards and panelboards.
Motor control centers.
Branch circuit panelboards.

PART 2 PRODUCTS

2.1 RACEWAYS AND SUBSTRUCTURES

Provide service conduits, risers, and pull-boxes in conformance with the requirements of the serving utility companies and as shown on the Drawings. This includes primary and secondary power, control and data. Materials and Methods of installation shall be in accordance with Section 16050 in addition to the requirements of the respective utility companies.

For overhead service facilities, provide substantial support means anchored to the structure to allow for the termination of overhead service drops. Flash and seal conduits penetrating roofs and walls.. Plan and layout the service facilities so as to allow proper clearance of conductors from buildings, roads, walkways, etc.

2.2 TRANSFORMER PAD AND VAULTS

Provide a reinforced concrete transformer pad in accordance with SCE requirements as indicated on the Drawings. Pre-cast products from Christy, Quickset, or Brooks are also acceptable if they meet SCE requirements. Provide approved traffic barrier posts where indicated by SCE.

Provide reinforced concrete pull boxes, vaults, and manholes in sizes as indicated on the Drawings. Where used for service facilities, adhere to the requirements of the serving utility companies. Outfit such boxes with bases ,extensions, necking, and lids as indicated on the drawings or required by the utility company. Provided cable racking means, pulling irons and other accessories as required by the utility company; such items shall be suitable for the intended use.

2.3 SERVICE EQUIPMENT

Provide a main service switchboard as indicated on the Drawings. The switchboard shall be comprised of underground pull, metering, main disconnect, over-current protection, and distribution sections. Provide additional auxiliary metering sections , control sections and load-side wireways as shown. The switchboard shall be of the totally enclosed, free-standing, dead-front type; constructed of code gauge sheet steel, fully finished, primed and painted.

The main switchboard rating shall be 200 Amps, 480Y277 Volts, three-phase, four-wire. The minimum AIC rating shall be as shown on the Drawings or as published by SCE for the corresponding service size. The switchboard shall be fully rated for the short circuit current as indicated; series ratings are not acceptable. Unless otherwise noted the main and distribution over-current protective devices shall be of the thermal magnetic circuit breaker type.

Fabricate the main switchboard with the following features:

Removable front panels and sheet steel skin over a rigid steel channel frame, bolted and welded. Unless otherwise noted the entire assembly shall be of uniform height and depth.

Incoming termination, current transformer and metering compartments arranged for sealing and built in conformance with the serving utility companies requirements.

Copper main busbars, copper insulated neutral busbar, and a copper ground bus installed the full length of the switchboard.
Quantity, ratings, and arrangement of distribution circuit breakers as indicated on the Drawings.

Main neutral bonding provision and neutral disconnect link. Clearly label both items with a permanent marking means.

Factory installed metal closure plates for future breakers.

Engraved plastic nameplates for each main breaker, feeder breaker, meter, switch, and auxiliary device.

Equip all spaces for future circuit breakers with hardware, bus taps, mounting clips, and screws as required for the immediate field installation of circuit breaker units. The size and quantity of such future units shall be as indicated on the drawings, but in no case less than twenty percent additional capacity, divided proportionally between the installed frame sizes.

Service equipment shall manufactured by one of the following major manufacturers: General Electric, Square D, Westinghouse. For the purpose of standardization of parts and coordination of over-current protective devices the main switchboard, distribution equipment, and branch panelboards shall all be of the same manufacturer.

2.4 DISTRIBUTION AND BRANCH CIRCUIT PANELBOARDS

Provide panelboards where indicated on the Drawings. Provide panels of type, rating, branch circuit quantities, and equipped with accessories as shown on the panel schedules.

Provide flush mounted, surface mounted, or free-standing panel enclosures of the NEMA type as indicated on the drawings. Provide hinged, leveled, flat, tight fitting, single door fronts with adjustable trim clamps. Panel doors exceeding 24" in height shall have multi-point latches. Finish the panel cabinet, door, and trim in two coats of ASA 61 or standard factory gray enamel over a prime coat. Paint surface panelboard cabinets in the same finish as the trim finish.

Equip all spaces for future circuit breakers with hardware, bus taps, mounting clips, and screws as required for the immediate field installation of circuit breaker units. The size and quantity of such future units shall be as indicated on the drawings, but in no case less than thirty-three percent (33%) additional capacity, divided proportionally between the installed frame sizes. For distribution panelboards, extend the main bussing for the full length or height of the usable space.

Equip panels with bolt-on thermal magnetic circuit breakers of the ratings and in the locations indicated. Multiple pole circuit shall have an internal common trip unit. Single pole circuit breakers with handle ties are not acceptable. Unless otherwise noted, do not use tandem or half-width circuit breakers to achieve the required quantity of circuits. Furnish handle locking devices for twenty percent (20%) of the installed circuit breakers.

The minimum interrupting rating for each panel is 10,000 AIC RMS symmetrical. Provide higher interrupting ratings where noted on the single line diagram or panel schedules. Panelboards shall be fully rated for the short circuit current as indicated; series ratings are not acceptable.

Provide a fully rated insulated neutral bus, or if indicated on the Drawings, 200% rated. Equip with a copper ground bus having a capacity of one conductor per branch circuit. Where indicated also provide an insulated, isolated ground bus with the same capacity as the ground bus.

Provide each branch circuit with a permanently fixed number visible with the outer door open. The numbering shall be arranged as indicated on the corresponding panel schedule in the Drawings. Provide a type-written circuit directory card securely mounted in a plastic or Plexiglas holder inside the outer door.

Provide flush type locks on panel doors. All locks for panel throughout the Project shall be keyed alike; furnish two keys for each panel.

Provide a nameplates on the panel cover that designates the panel name, voltage, and location of the main disconnect device. The nameplate shall be engraved plastic permanently fastened with screws or epoxy. Example:

Panel A 480Y/277 Volt Fed from MS2-6

Panelboards shall be manufactured by one of the following major manufacturers: General Electric, Square D, or Cutler - Hammer. For the purpose of standardization of parts and coordination of over-current protective devices, the main switchboard, distribution equipment, and branch panelboards shall all be of the same manufacturer.

2.5 TRANSFORMERS - DRY TYPE

Provide transformers in sizes and NEMA-type enclosures as shown on the Drawings. Transformers shall be dry type, air insulated, self-cooled, three phase, 60 cycles with 480 volt delta connected primary windings which shall contain a minimum of two 2- 1/2% FCAN taps and two 2-1/2% FCBN taps. Taps shall be front accessible by way of a removable cover which shall be fitted with an engraved plastic nameplate reading "De- energize transformer before removing cover" (1/4 inch high letters). Transformer secondaries shall be three phase to provide 208/120 volts three phase four wire. Transformers shall be Class 220 insulated and be of the non-explosive, fire-resistant type and shall be cooled by the natural circulation of air through the windings. Insulation shall consist of such materials as porcelain, glass, mica and similar inorganic materials and binders to impart the necessary mechanical strength to the insulation structure without detrimental effect to its fire resistant qualities. Transformers shall be designed for 115° C maximum temperature rise in a 40° C ambient at full rated load. Transformers shall be subjected to routine tests specified in the latest edition of NEMA publication TRI. Certified test data on the following tests shall be submitted to the Engineer, if so requested:

Resistance measurements of all windings on rated voltage connection and tap extremes.

Ratio tests on the rated voltage connection and on all tap connections (within 1% between phases).

Polarity and phase relation tests on the rated voltage connection.

No-load loss at rated voltage on the rated voltage connection.

Exciting current at rated voltage on the rated voltage connection.

Impedance and load loss at rated current on the rated voltage connection and on the tap extremes.

Applied potential tests.

Induced potential tests.

Transformer shall comply with NEMA/ANSI C89.2, ASA and AIEE standards, shall be designed to withstand 150% of rated load for 2 hours continuously.

Transformer shall comply with NEMA/ANSI TP-1 for energy efficiency as required by Title 20 & 24 of the state of California.

Transformers shall be mounted on approved noise isolating pads in order to reduce noise and shall have maximum sound levels over ambient as follows:

15 to 30 kVA:	40 dB
45 to 150 kVA:	45 dB
225 to 300 kVA:	50 dB

2.6 GROUNDING & BONDING

Permanently and effectively ground the system neutral conductor of the incoming service and all separately derived systems unless otherwise noted. Provide separate building grounding electrode systems and bonding in accordance with Code requirements.

Each grounding electrode system shall be comprised of a concrete encased (Ufer) grounding electrode, the building metal structure, underground metallic cold water piping, and other existing or made electrodes as indicated. Make grounding electrode conductor connections in accessible locations using approved bronze pressure clamps, grounding hubs, or cadwelds.

Demonstrate a maximum resistance to earth of 25 ohms as specified in Section 16010. Provide additional made electrodes as necessary to meet this criteria.

Install equipment grounding conductors in all power feeders. The minimum size shall be as required by the Code, or larger where indicated on the Drawings. Provide additional insulated, isolated ground conductors where indicated. Such additional insulated, isolated ground conductors shall be connected to ground only at the origination point of the respective derived system as shown on the Drawings.

Provide an insulated equipment grounding conductor sized per Code requirements in all branch circuit conduits whether or not shown on the Drawings.

Permanently and effectively bond raceway systems, metallic supports, switchboards, panelboards, control equipment, cabinets and equipment enclosures.

PART 3 EXECUTION

3.1 RACEWAYS AND SUB-STRUCTURES

Observe the published standards of the serving utilities in all respects. The service substructures shown on the Drawings are the closest representation of the Project requirements at the time the drawings were prepared. Make use of all utility company engineered drawings and specifications in installing the Work, and comply with any field orders issued by authorized representatives of the utility companies. Make contact with the serving utility companies and arrange for all required field inspections, tie-ins, and shutdowns.

Provide sand bedding, clean backfill, and compaction for underground conduits in accordance with the serving utility company requirements. In joint trench applications, pay particular attention to the requirements of the various trench occupants, including horizontal and vertical separation and additional depth requirements where crossing other utilities.

Install power and signal distribution system feeders in accordance with Section 16050: Basic Materials and Methods.

3.2 CONCRETE TRANSFORMER PAD

Grade, compact, form, ground and prepare the transformer pad in accordance with SCE published standards. Where installed in landscaped or paved areas, set the top of the pad 2" above the surrounding grade. Where installed in a concrete utility yard or sidewalk area, integrate the transformer pad with the surrounding slab so as to realize a continuous, coordinated finish. Provide a raised housekeeping pad for the transformer if so indicated in the Drawings.

Prior to installation, verify with SCE the proper clearance from structures, building openings, and overhangs as well as the exact location and orientation of the transformer pad. Provide related barrier posts, grounding, and accessories as required by SCE.

3.3 SWITCHBOARDS AND MOTOR CONTROL CENTERS

Anchor the equipment to the concrete slab using ½" x 3" concrete expansion anchor bolt at each corner. For equipment over six feet (6') in width provide a minimum of two additional anchors for every six foot increment, or fraction thereof. Concrete expansion anchors shall be Phillips "Red Head", or approved equal. Bolt adjacent switchboard sections together using ½" machine bolts and nuts.

Verify that clearances in front of, and around , the main switchboard, motor control centers, and other electrical equipment are maintained in accordance with Code requirements. Install free-standing equipment line-ups with the fronts aligned.

3.4 DISTRIBUTION AND BRANCH CIRCUIT PANELBOARDS

Align the top of wall mounted branch panelboard at 6'-6" above the finished floor or surrounding grade. Flush panelboards shall be true and perpendicular to the building lines, with a neat return to the wall finish, without gaps or voids between the cover and wall. If panelboard covers are to be painted to match the surrounding finish, paint them separately from the surrounding wall so as to avoid adhering the cover in place.

For freestanding panelboards installed on roofs, provide a built-up curb with watertight roofing, flashing and counter-flashing. All elements of the curb and roofing modifications shall be installed in accordance with the roof manufacturers recommendations.

For recessed panels in wood stud walls, frame the opening with 2x wood blocking and fasten the panel with a #12 x 1-3/4" wood screw at each corner. In metal stud construction, frame the opening with metal studs to transfer the weight to the floor, and fasten the panel with a #12 x 1½" Tek screw at each corner.

For surface panels on wood stud walls, provide anchorage of panelboards independent of the wall surface. Install 2"x6" or 4"x4" wood blocking, top and bottom, at the intended panel location. Fastened the blocking with approved Simpson hangers, end nailing of blocking is not acceptable. Fasten the panel to the blocking with a #12 x 2" wood screw at each corner. For metal stud construction, provide wood blocking as noted above or utilize 14 gauge sheet metal backing plates and fasten the panel with #12 x 2" Tek screws at each corner.

For flush mounted panelboards in areas with accessible ceilings, provide a minimum of one 1¼", two 1", and two ¾"empty conduits stubbed up into the ceiling space. The drawings may indicate additional empty conduits. Cap the conduits and mark the nature of the conduits in the panel with permanent ink marker.

Neatly lace branch circuit conductors in panelboards with tie-wraps. Clearly indicate the name, location, and nature of the loads fed by each branch circuit on the typed circuit directory card. For surface panels, mark the branch conduits with their respective destinations with permanent ink marker.

Make conduit entries through neat, perpendicular holes in the panel cabinet. Do not use pre-punched concentric knockouts unless all rings are removed; rather punch clean, individual holes where additional conduit entries are required. Provide factory installed filler plates in the panel front for each empty breaker space.

END OF SECTION

ALLEN BRADLEY 1734 CONTROL LOGIX REMOTE PLC

WELLHEAD CONTROL PANELS

REMOTE PLC CONTROLLER

Table of Contents

1.00	General Specifications
2.00	Service
3.00	Assembled Systems
4.00	Design Description
5.00	Main Frame Hardware
6.00	Power Supplies
7.00	Input and Output - General
8.00	Input and Output Modules
9.00	Interfacing and Peripherals
10.00	Diagnostics

1.00 General Specifications

1.01 This specification has been developed to establish minimum requirements for a solid-state programmable controller designed to provide high reliability in industrial applications The internal wiring of the controller is to be fixed, with the logic functions it must perform in a given application to be programmed into its memory. The controller shall be supplied with the CPU, input/output scanner, inputs, outputs, memory, power supply, and all power and interface cables necessary to function as a complete and operable programmable controller system.

1.02 The objective of the programmable controller will be to improve reliability, maintainability, and efficiency by reducing operating costs and downtime.

1.03 Submittals

SD-03 Product Data
The vendor shall provide to WESTON data sheets for all products to be installed.

SD-06 Test Results
The vendor shall provide to WESTON test results associated with loop checks, diagnositics, commissioning, and start-up.

2.00 Service

2.01 The supplier shall provide operating instruction manuals with adequate information pertaining to the following:

(1) System specifications

(2) Electrical power requirements

(3) Application considerations

(4) Assembly and installation procedures

(5) Power up procedures

(6) Troubleshooting procedures

(7) Programming procedures

(8) Explanation of internal fault diagnostics

(9) Shut down procedures

(10) Recommended spare parts list

2.02 The programmable controller (PLC) shall be of high quality and reliability with replacement processors, power supplies, chassis, I/O and specialty modules that are readily available on an urgent or emergency basis. All PLC products shall be fully supported and available for purchase for up to seven (7) years from the date of the original system purchase.

2.03 The supplier shall provide a network of field sales and support personnel located in key cities throughout the United States and internationally. The supplier shall also provide a field service department with experienced representatives stationed in major cities with the capability to provide telephone consultation, prompt on-site service, and field replacement stock.

2.04 The supplier shall provide product application assistance by trained and experienced engineers to assist the customer with program and system development through telephone consultation and on-site checkout, debug, and start-up assistance.

3.00 Assembled Systems

3.01 A supplier shall assume single source responsibility for system assembly. An assembled system may include mounting and wiring of relays, motor starters, transformers, and disconnecting means, or other control devices as specified by customer-supplied documentation.

3.02 The supplier shall provide mounting and wiring of the programmable controller system in a NEMA type 6P or other enclosure that may be specified.

3.03 If specified, the enclosure shall be able to accommodate an electrical service of 120 volt, Single phase, 60 Hz.

3.04 The supplier shall have the capability to supply an enclosure with special paint and graphic displays.

3.06 The supplier shall wire all programmable controller inputs and outputs to customer-specified terminal blocks.

3.07 The assembled system shall include fuse blocks as sized by the customer's application.

3.08 Within the enclosure all I/O racks, processor racks, and power supplies shall be grounded to meet the manufacturer's specifications.

3.09 The supplier shall be able to provide within the enclosure a master control relay to de-energize each I/O module and inhibit machine motion. The master control relay must be de-energized directly by a hardwired Emergency Stop pushbutton.

3.10 If more than one controller is mounted within an enclosure, the capability must exist to share a single programming panel or line printer.

3.11 All pushbuttons, switches and other operator devices must be UL listed and/or CSA approved, and sufficiently large and durable to provide dependable, long life operation.

3.12 All cables (with associated plugs, connectors and receptacles) requiring user field installation shall be designed for commercial use to withstand an industrial environment.

3.13 Upon receipt of the purchase order, but prior to the start of the manufacturing of the equipment, the supplier shall submit drawings of the complete assembled system for approval by the purchaser or their consultant.

3.14 Drawings that are returned to the supplier for correction or revision shall be resubmitted for approval before starting fabrication of the work in question unless marked "approved as noted".

3.15 All drawings shall include page, sheet, and line numbers.

3.16 The first page of all drawings and schematics shall be a cover sheet consisting of a Bill of Material.

3.17 The drawings shall include a mechanical layout detailing the overall external dimensions of the enclosure. The drawings shall include such pertinent information as location of door handles, windows, lifting lugs, and enclosure mounted items such as tachometer or current meters, cooling fans, etc.

3.18 The supplier shall provide documentation detailing the mounting of the processor, I/O racks, motor starters, disconnect switch, fuse blocks, wireways, etc. All materials shall be labeled to provide easy cross-reference to the Bill of Material listing.

3.19 Electrical prints detailing all hardwiring, done by the supplier, to devices such as relays, motor starters, disconnect switches, fuse blocks, etc. shall be provided with individual wire numbers and relay contact cross-reference designations.

3.20 Sections describing inputs shall designate input modules by name, slot, module, and terminal location.

3.21 The last sheet in the set shall be for terminal block designations each containing their individual terminal numbers.

3.22 At the time the equipment is shipped, one (1) reproducible copy of each drawing mentioned above shall be provided with the equipment.

4.00 Design Description

4.01 A major consideration of the programmable controller system shall be its modular, field expandable design allowing the system to be tailored to the customer's machine and/or process control application. The capability shall exist to allow for expansion of the system by the addition of hardware and/or user software

4.02 Modules are defined herein as devices that plug into a chassis and are keyed to allow installation in only one direction. The design must prohibit upside down insertion of the modules. The programmable controller system must be able to determine the correctness of the module and chassis configuration prior to executing the user program.

4.03 The programmable controller shall have downward compatibility whereby all new module designs can be interchanged with all similar modules in an effort to reduce obsolescence.

4.04 All hardware of the programmable controller shall operate at an ambient temperature of 0° to 60°C (32° to 140°F), with an ambient temperature rating for storage of - 40° to + 85°C (-40° to + 185°F).

4.06 The programmable controller hardware shall function continuously in the relative humidity range of 5% to 95% (non-condensing).

4.07 The programmable controller system shall be designed and tested to operate in the high electrical noise environment of an industrial plant.

4.08 The programmable controller system shall be UL listed and CSA certified.

4.09 The CPU shall have the capability of addressing up to 4096 input and 4096 output points.

4.10 Each input and output module shall be a self-contained unit.

4.11 The programmable controller system shall include the capability of addressing remote input and output modules up to 2,000 cable feet from the processor as an optional module. The communication link between the module and any remote input and output distribution chassis shall be via a 20 AWG tinned copper twinaxial cable with braided and foil shields. The communications baud rate to the remote locations shall be at least 57.6 Kbaud and user selectable on a per module basis. If the maximum distance is reduced to 1000 cable feet, the communications speed shall be increased to 115.2 Kbaud. For racks located on a link of less than 500 cable feet, the speed shall be increased to 230.4 Kbaud

4.12 The total allowable length of a segment containing standard RG-6 quad shield coaxial cable depends upon the number of taps in your segment. There is no minimum trunk-cable section length requirement. The maximum allowable total length of a segment is 1,000m (3,280ft) with two taps connected. Each additional tap decreases the maximum length of the segment by 16.3m (53ft). The maximum number of taps allowed on a segment is 48 with a maximum length of 250m (820ft).

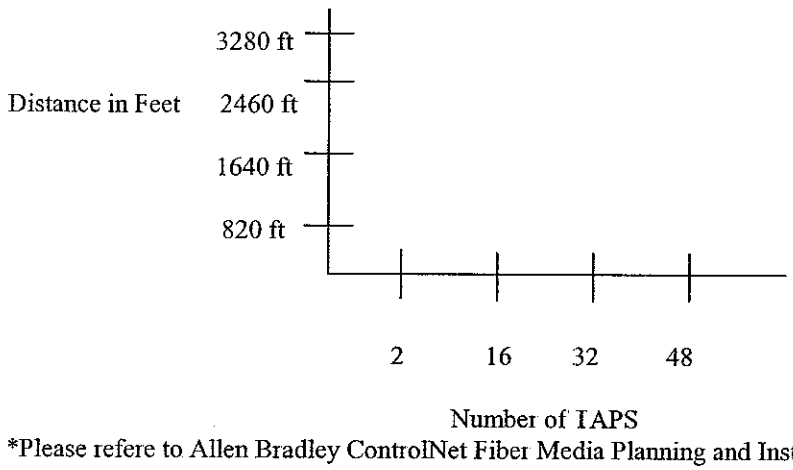

*Please refere to Allen Bradley ControlNet Fiber Media Planning and Installation Guide 1756 Series

4.13 The programmable controller system shall be capable of being configured with a redundant processor to allow uninterrupted control of remote inputs and outputs in the event of a primary processor failure.

4.14 The Programmable Controller shall have one dedicated serial port which supports RS-485 signals. It shall be accessible in ladder logic and provide support for DH485 protocol systems. It must be usable for programming purposes.

4.15 The Programmable controller shall execute boolean conditional instructions (or contacts) within 0.45 microsecends each. The Programmable controller shall execute boolean output instructions (or coils) within 0.64 microsecends each. The Programmable controller shall execute 3 operand (x 16 bit) Add and Subtract instructions within 1.71 microsecends each. The Programmable controller shall execute 2 operand (x 16 bit) comparison (=, /=, <, < or =, >, > or =) instructions within 1.26 microsecends each. The Programmable controller shall execute 3 operand (x 16 bit) circular comparison (or limit) instructions within 1.96

microsecends each. The Programmable controller shall execute 2 operand (x 16 bit) Move instructions within 1.26 microsecends each

5.00 Main Frame Hardware

5.01 The PLC shall have a modular chassis design that allows for ease of future expansion. The processor module shall be easily removed from the I/O chassis for service or repair. All I/O cards and modules, with the exception of the CPU, shall be capable of being installed in any open slot in the chassis.

5.02 Slotted I/O chassis shall be Allen Bradley 1734-ACNR FLEX I/O chasis.

5.03 The CPU shall be a self-contained unit, and will provide Ladder Rung program execution and support remote or local programming. This device will also supply I/O scanning and inter- processor and peripheral communication functions.

5.05 The operating system shall be contained in permanently mounted yet reprogrammable devices, which allow for easy field upgrades without the need of tools.

5.06 In a single chassis system all system and signal power to the CPU, support modules shall be distributed on a single motherboard or backplane. No interconnecting wiring between these modules via plug-terminated jumpers shall be acceptable.

5.07 All system modules, main and expansion chassis shall be designed to provide for free air flow convection cooling.

5.09 Processor mode shall be selected by a keyswitch mounted on the front panel of the CPU. The key shall select the following modes: RUN - No ladder edits possible, program always executing; PROGRAM - Programming allowed, program execution disabled; and REMOTE - Programming terminal can make edits and change processor mode, including TEST mode, whereby the logic executes and inputs are monitored, but output states are not changed.

5.10 The CPU shall be Allen Bradley L55M22 with 750 k/b of NV memory.
Located in HOST PLC I/O rack

6.00 Power Supplies

6.01 The programmable controller shall operate in compliance with an electrical service of either 120 VAC, single phase, in the frequency range from 47 to 63 Hz.

6.02 The programmable controller shall have a modular power supply that mounts directly to the I/O chassis and can be easily serviced or replaced. The system shall be capable of being powered on 120VAC or 24VDC by simply choosing different power supply modules. The manufacturer shall be able to provide as standard equipment, a system power supply capable of converting line power to the DC power required to by the programmable controller system.

6.03 A single main power supply shall have the capability of supplying power to the CPU and local input/output modules. Auxiliary power supplies shall provide power to each expansion chassis.

6.04 The power supply shall automatically shut down the programmable controller system whenever its output current is detected as being excessive.

6.05 When the power supply is wired to utilize 120 VAC power, the system shall function properly within the range of 85 to 132 VAC. The power supply shall provide surge protection, isolation, and outage carry-over of at least 1 cycle of the AC line.

6.06 In cases where the AC line is especially unstable or subject to unusual variations it shall be possible to install a constant voltage transformer having a sinusoidal output waveform.

6.07 Design features of the programmable controller power supply shall include diagnostic indicators mounted in a position to be easily viewed by the user. These indicators shall provide the operator with the status of AC and DC power applied.

6.08 At the time of power-up, the power supply shall inhibit operation of the processor and I/O modules until the DC voltages are within specifications.

6.09 The power supply shall be Allen Bradley 1734 –PA72

7.00 Program Storage

7.01 The processor shall have solid state RAM memory to store the application program, process data, and alarm status. This memory shall have both capacitor and battery backup in the event that input power to the processor is lost

7.02 Memory shall contain battery back-up capable of retaining all stored program data through a continuous power outage for 24 months under worst case conditions. The capability shall exist to replace the CPU's battery without incurring a loss of user program. A low battery condition must be detectable in ladder logic, but shall not automatically generate a major fault.

7.03 The programmable controller system shall be capable of addressing up to 16 K words, where each word is comprised of 16 data bits.

7.04 Memory shall be available in 12 K with additional 4 K data word segments of RAM memory.

7.05 The programmable controller system should provide the capability to use EEPROM as a backup for volatile memory up to the full capacity of the controller. The EEPROM backup memory shall have the capability to automatically reload the memory on a power cycle.

7.06 The operator should be able to backup volatile memory, including data and program logic onto either a 3 1/2 inch floppy diskette or hard disk, at their option.

7.07 All user memory in the processor not used for program storage shall be allocatable from main memory for the purpose of data storage. The programmable controller system shall be capable of storing the following data types:

1) External Output Status
2) External Input Status
3) Timer Values

4) Counter Values
5) Signed Integer Numbers (16 bit)
8) Binary Numbers
9) BCD Numbers
10) Direct and Indexed addressing
11) Internal Processor Status Information
12) ASCII Character Data

The above listed data types shall be distinguishable to the CPU by the addressing format. Management of the data types into memory subsections shall be an automatic function of the CPU operating system Any data can be displayed in Binary, Octal, Hexadecimal, Decimal, or ASCII radices. Function-specific data types such as PID, Message, or Processor Status shall have dedicated displays available annotating the meaning of specific control bits and words within them and allowing for selective control where appropriate.

7.08 If contacts or entire rungs are intentionally deleted from an existing logic program, the remaining program shall be automatically repositioned to fill this void. Whenever contacts or entire rungs are intentionally inserted into an existing program, the original program shall automatically be repositioned to accommodate the enlarged program.

7.09 To reduce the effective scan time in order to detect short pulse duration inputs, it shall be possible to program a select logic rung more than once into memory.

7.10 The number of times a normally open (N.O.) and/or normally closed (N.C.) contact of an internal output can be programmed shall be limited only by the memory capacity to store these instructions.

7.11 Ladder logic programs shall have immediate access to the subelements of control structures by address and subelement mnemonic, such as timer accumulator value or timer done bit.

8.00 Input and Output - General

8.01 Each input or output module shall be a self-contained unit housed within an enclosure.

8.02 The input/output enclosure (chassis) with its respective modules shall be of universal type, and compatible with several programmable controllers manufactured by the supplier. Racks shall be sized to accommodate I/O in increments of 2,4,7,10, or 13 slots per chassis.

8.04 Isolation shall be used between all internal logic and external power circuits. This isolation shall meet the minimum specification of 500 VRMS.

8.05 It shall be possible to replace any 8 or 16 point input or output module without disturbing field wiring.

8.06 Each I/O module shall contain a visual indicator to display ON/OFF status of individual input or output points.

8.07 All user wiring to I/O modules shall be through a heavy-duty terminal strip. Pressure-type screw terminals shall be used to provide fast, secure wire connections.

8.08 All 8 point, 16 point, and specialty input/output modules shall be color coded and titled with a distinctive label.

8.09 All input modules shall have a specified filter time constant to limit the effects of voltage transients.

9.00 Input and Output Modules

9.01 The programmable controller manufacturer shall offer discrete input/output hardware consisting of the following types:

Inputs:

A) AC input: for devices that operate at 120 or 240 VAC, 50/60 Hz, AC input modules shall be Allen Bradley 1734-IA2 FLEX I/O.

B) DC input: for devices that operate at 5 to 30 VDC, DC input modules shall be Allen Bradley 1734-IB4 FLEX I/O.

Outputs:

A) AC output: for devices that operate at 120 VAC, 50/60 Hz shall be Allen Bradley 1734-0A2 FLEX I/O.

B) AC output: for devices that operate at 220/240 VAC, 50/60 Hz shall be Allen Bradley 1734-IM2 FLEX I/O.

C) AC output: for devices that operate at 24 VAC, 50/60 Hz shall be Allen Bradley 1734-0A2 FLEX I/O.

D) DC output: for devices that operate at 10 to 60 VDC shall be Allen Bradley 1734-0B2 FLEX I/O.

E) Isolated Contact output: which provides eight (8) isolated outputs capable of switching 120 VAC, 220 VAC, or 24 VDC power shall be Allen Bradley 1734-0W2 FLEX I/O

9.02 Analog I/O modules

A) Analog input which accepts analog signals and converts them to sixteen (16) bit binary values Digital resolution shall be available in 1 part in 65536 voltage or 1 part in 32767 current. Analog inputs shall be differential. Analog inputs shall be Allen Bradley 1734-IE2C FLEX I/O

9.03 Specialized input modules of the following types shall be available:

9.04 Communication moduals shall be Allen Bradley 1756-CNB located in HOST PLC.

9.05 Repeater Moduals for interfacing the HOST PLC and all REMOTE PLC's shall be Allen Bradley 1786-RPA/B and 1786-PRCD controller reapeaters.

10.00 Interfacing and Peripherals

10.01 The programming means shall be an IBM or compatible, portable, or industrial quality programming terminal.

10.02 The terminal keyboard shall allow for loading of the program format and ASCII characters.

10.03 The terminal shall be able to function as a stand-alone ASCII (alphanumeric) data terminal with an RS-232-C interface allowing connection to an in-house computer, data terminal, or modem.

10.04 The programming terminal shall be compatible for interfacing with an electrical service of either 120 VAC, 50/60 Hz. or 220 VAC, 50/60 Hz.

10.05 The terminal shall provide for selecting the communication rate between 110 and 19200 baud for RS-232-C communications.

10.06 The terminal shall be capable of displaying a minimum of thirty (30) graphic (line drawing) characters.

10.07 The programming terminal shall be capable of displaying a rung consisting of a maximum of seven (7) series elements and six (6) parallel elements.

10.09 The means to indicate contact or output status shall be by intensification of the contact or output on the CRT screen. Each element's status shall be shown independently, regardless of circuit configuration.

10.10 The programmable controller system shall be able to interface with a data terminal which is RS-232-C compatible (up to 19200 baud) to generate hard copy logic diagrams and/or message generation.

10.11 The system shall have the capability to interface to a 3 1/2 inch magnetic floppy disk and/or a hard disk for loading a user program into, or recording the contents of, the processor's memory. It shall be possible to load or record the entire contents or selected portions of memory.

A) Token passing system
B) Peer-to-peer communication
C) Message error checking
D) Retries of unacknowledged messages
E) Diagnostic checks on other stations
F) Interface to more than one network
G) A user-oriented command language for manipulation of data structures of variable size and organization, such as setting or resetting bits, word and file transfers, and program loading.
H) Bi-directional communication between the programmable controllers and the communication network via a standard modem interface. The protocols shall meet ANSI standard.
I) The ability to communicate with all other models of programmable controller manufactured by said manufacturer.
J) The ability to monitor the status of any processor remotely via the network.

11.00 Programming Techniques

11.01 The programming format shall be traditional relay ladder diagram

11.02 It shall be possible to program a maximum instruction matrix containing as many as 128 instructions.

11.03 The capability shall exist to change a contact from normally open to normally closed, add instructions, change addresses, etc. It shall not be necessary to delete and reprogram the entire rung.

11.04 It shall be possible to insert relay ladder diagram rungs anywhere in the program, even between existing rungs, insofar as there is sufficient memory to accommodate these additions.

11.05 A single program command or instruction shall suffice to delete an individual ladder diagram rung from memory. It shall not be necessary to delete the rung contact by contact.

11.06 It shall be necessary to issue a two part command in order to delete all relay ladder rungs from memory. This will provide a safeguard wherein the operator must verify their intentions before erasing the entire program.

11.07 A clock/calendar feature shall be included within the CPU. Access to the time and date shall be from the programming terminal, user program, or message generation.

11.08 Latch functions shall be internal and programmable.

11.09 The system shall have the capability to address software timers and software counters in any combination and quantity up to the limit of available memory. All management of these instructions into memory shall be handled by the CPU. Instructions shall permit programming timers in the "ON" or "OFF" delay modes. Timer programming shall also include the capability to interrupt timing without resetting the timers. Counters shall be programmable using up-increment and down-increment.

11.10 Timer instructions shall include selectable time bases in increments of 1.0 second and 10 milliseconds. The timing range of each timer shall be from 0 to 32,767 increments. It shall be possible to program and display separately the timer's preset and accumulated values.

11.11 The programmable controller shall use a signed integer format ranging from -32,768 to +32,767 for data storage of the counter preset and accumulated values.

11.12 The programmable controller shall store data in the following formats:

A) Signed Integer Numbers ranging from -32,768 to +32,767.

11.13 The programmable controller shall have support for integer signed math functions consisting of addition, subtraction, multiplication, division, and square root.

11.14 When using modules such as analog where multiple channels are terminated on one module, it shall be possible to transfer the current status of all channels to the CPU upon execution of one program instruction. This instruction shall be bidirectional to include data transfer from the CPU to the module or from the module to the CPU.

11.15 Instructions shall be provided for grouping contiguous 16 bit data words into a file. The system shall address up to 256 files with up to 256 words per file. File manipulation instructions such as high-speed "file copy" and "file fill", "file to file" move, "element to file" move, "file to element" move, and "first in-first out" shall be supported by the system. The four function math instructions and instructions for performing "logical OR", "logical AND", "exclusive OR", and comparison instructions such as "less than", "greater than", and "equal to" shall be included within the system. All instructions shall execute on either single words or files.

11.16 The system shall contain instructions that will construct synchronous 16 bit word shift registers. Additional instructions shall be provided to construct synchronous bit shift registers.

11.17 The programmable controller shall have a jump instruction which will allow the programmer to jump over portions of the user program to a portion marked by a matching label instruction.

11.18 In applications requiring repeatable logic rungs it shall be possible to place such rungs in a subroutine section. Instructions that call the subroutine and return to the main program shall be included within the system. It shall be possible to program several subroutines and define each subroutine by a unique label. The processor will support nesting of subroutines up to eight levels deep. The program format as displayed on the CRT shall clearly define the main program and all subroutines.

11.19 The program format shall display all instructions on a CRT programming panel with appropriate mnemonics to define all data entered by the programmer. The system shall be capable of providing a "HELP" instruction which when called by the programmer will display on the CRT a list of instructions and all data required to enter an instruction into the system memory.

11.20 At the request of the programmer, data contained in system memory shall be displayed on the CRT programming panel. This monitoring feature shall be provided for input/output status, timer/counter data, files, and system status. Ladder logic rungs shall be displayed on the CRT with rung numbers in sequential order.

11.21 The system shall have the capability to enter rung comments above ladder logic rungs. These comments may be entered at the same time the ladder logic is entered.

11.22 The capability shall exist for adding, removing, or modifying ladder logic rungs during program execution. When changes to ladder logic are made or new logic rungs are added, it shall be possible to test the edits of such rungs before removal of the prior logic rung is executed.

11.23 It shall be possible to manually set (force) either on or off all hardwired input or output points or Analog values from the CRT programming panel or the main chassis front panel. Removal of these forced I/O points shall be either individually or totally through selected keystrokes. The programming terminal shall be able to display forced I/O points.

11.24 The execution of the program logic shall be accelerated by scanning the rung only until a positive decision as to the state of the outputs has been made. In many cases this will mean skipping over logic elements if the output condition has been predetermined.

11.25 A means to program a fault recovery routine shall exist. When a major system fault occurs in the system, the fault recovery routine shall be executed and then the system shall

determine if the fault has been eliminated. If the fault is eliminated, program execution resumes. If the fault still exists, the system will shut down.

11.26 An interrupt routine shall be programmable such that the routine shall be executed regularly. The interval at which the routine is executed shall be user-specified in the range of 1 to 32767 milliseconds. This routine must be able to close an asynchronous control loop consisting of 32 Input points, 32 output points, 100 contact/coils, 10 addition instructions, 10 subtraction instructions and 32 circular comparison (Limit) instructions while never exceeding a 2 millisecond interval. The measurement of this interval is from the Input filter delay time to the time that the physical output transitions.

11.27 The ability to program ladder logic via symbols from the global database of the programmable controller shall exist.

11.28 An instruction shall be supported to incorporate closed loop control systems. The "proportional", "integral", and "derivative" elements shall be accessible to the user in order to tune a closed loop system.

11.29 The CPU shall support indexed addressing of inputs and outputs, along with all data table words (integer, binary, timers, and counters) for the software instruction set.

11.30 The system shall support both bit and word level diagnostic instructions.

11.31 To facilitate conditional event detection programming, output instructions shall include a "one shot" instruction that may be triggered on the low-to-high (rising) rung condition.

11.32 The processor shall support Master Control Reset (Relay) type functionality to selectively disable sections of relay ladder logic.

11.33 An interrupt routine shall be programmable such that the routines shall be executed based upon the input conditions of up to eight discrete hardware inputs in the processor chassis. The routine will be executed within 500 microseconds of the detection of the input signals. The 8 inputs will be repetitively examined/scanned within a 100 microsecond time period.

12.00 <u>Diagnostics</u>

12.01 The processor shall have built-in diagnostics and self-test, such that each time power is cycled, the processor does a complete CPU and RAM memory test. Additionally the power-up test will momentarily light up all diagnostic LED's to be sure they are working. The processor shall be capable of reporting major and minor fault codes and processor status information back to the polling master, provided the fault is not a catastrophic hardware failure where the processor is unable to power up.

12.02 The processor shall have a built-in watchdog timer to ensure that all processor program scans occur within the time limit set by the watchdog timer. The watchdog timer cycle shall be adjustable from 20 msec to 2.5 seconds in 10 msec increments.

ALLEN BRADLEY 1756 SERIES CONTROL LOGIX HOST PLC

SPECIFICATION FOR

TORO HOST PLC CONTROLLER
ALLEN BRADLEY
1756 SERIES CONTROL LOGIX

Table of Contents

1.00	General Specifications
2.00	Service
3.00	Assembled Systems
4.00	Design Description
5.00	Main Frame Hardware
6.00	Power Supplies
7.00	Program Storage
8.00	Input and Output - General
9.00	Input and Output Modules
10.00	Interfacing and Peripherals
11.00	Programming Techniques
12.00	Diagnostics

1.00 General Specifications

1.01 This specification has been developed to establish minimum requirements for a solid-state programmable controller designed to provide high reliability in industrial applications. The internal wiring of the controller is to be fixed, with the logic functions it must perform in a given application to be programmed into its memory. The controller shall be supplied with the CPU, input/output scanner, inputs, outputs, memory, power supply, and all power and interface cables necessary to function as a complete and operable programmable controller system.

1.02 The objective of the programmable controller will be to improve reliability, maintainability, and efficiency by reducing operating costs and downtime

1.03 The specification shall be followed in accordance with the contract and all areas of questions or noncompliance shall be submitted to the purchaser for review and approval.

1.0.4 Submittals

SD-03 Product Data
The vendor shall provide to WESTON data sheets for all products to be installed.

SD-06 Test Results
The vendor shall provide to WESTON test results associated with loop checks, diagnositics, commissioning, and start-up.

2.00 Service

2.01 The supplier shall provide operating instruction manuals with adequate information pertaining to the following:

(1) System specifications

(2) Electrical power requirements

(3) Application considerations

(4) Assembly and installation procedures

(5) Power up procedures

(6) Troubleshooting procedures

(7) Programming procedures

(8) Explanation of internal fault diagnostics

(9) Shut down procedures

(10) Recommended spare parts list

2.02 The programmable controller (PLC) shall be of high quality and reliability with replacement processors, power supplies, chassis, I/O and specialty modules that are readily available on an urgent or emergency basis. All PLC products shall be fully supported and available for purchase for up to seven (7) years from the date of the original system purchase.

2.03 The supplier shall provide a network of field sales and support personnel located in key cities throughout the United States and internationally. The supplier shall also provide a field service department with experienced representatives stationed in major cities with the capability to provide telephone consultation, prompt on-site service, and field replacement stock.

2.04 The supplier shall provide product application assistance by trained and experienced engineers to assist the customer with program and system development through telephone consultation and on-site check-out, debug, and start-up assistance.

2.05 The supplier shall have the capability to conduct on-site training programs at a location provided by the customer.

3.00 Assembled Systems

3.01 A supplier shall assume single source responsibility for system assembly. An assembled system may include mounting and wiring of relays, motor starters, transformers, and disconnecting means, or other control devices as specified by customer-supplied documentation.

3.02 The supplier shall provide mounting and wiring of the programmable controller system in a NEMA type 12 or other enclosure that may be specified.

3.03 If specified, the enclosure shall be able to accommodate an electrical service of 120 volt, 1 phase, 60 Hz. The enclosure shall have sufficient room for a 115 VAC control transformer to service the processor, inputs, and outputs.

3.04 The supplier shall have the capability to supply an enclosure with special paint and graphic displays

3.05 The supplier shall wire all programmable controller inputs and outputs to customer-specified terminal blocks.

3.06 The assembled system shall include fuse blocks as sized by the customer's application.

3.07 Within the enclosure all I/O racks, processor racks, and power supplies shall be grounded to meet the manufacturer's specifications.

3.10 The supplier shall be able to provide within the enclosure a master control relay to de-energize each I/O module and inhibit machine motion. The master control relay must be de-energized directly by a hardwired Emergency Stop pushbutton.

3.11 If more than one controller is mounted within an enclosure, the capability must exist to share a single programming panel or line printer.

3.12 All pushbuttons, switches and other operator devices must be UL listed and/or CSA approved, and sufficiently large and durable to provide dependable, long life operation.

3.13 All cables (with associated plugs, connectors and receptacles) requiring user field installation, shall be designed for commercial use to withstand an industrial environment.

3.14 Upon receipt of the purchase order, but prior to the start of the manufacturing of the equipment, the supplier shall submit drawings of the complete assembled system for approval by the purchaser or their consultant.

3.15 Drawings that are returned to the supplier for correction or revision shall be resubmitted for approval before starting fabrication of the work in question unless marked "approved as noted".

3.16 All drawings shall include page, sheet, and line numbers

3.17 The first page of all drawings and schematics shall be a cover sheet consisting of a Bill of Material.

3.18 The drawings shall include a mechanical layout detailing the overall external dimensions of the enclosure. The drawings shall include such pertinent information as location of door handles, windows, lifting lugs, and enclosure mounted items such as tachometer or current meters, cooling fans, etc.

3.19 The supplier shall provide documentation detailing the mounting of the processor, I/O racks, motor starters, disconnect switch, fuse blocks, wireways, etc. All materials shall be labeled to provide easy cross-reference to the Bill of Material listing.

3.20 Electrical prints detailing all hardwiring, done by the supplier, to devices such as relays, motor starters, disconnect switches, fuse blocks, etc shall be provided with individual wire numbers and relay contact cross-reference designations.

3.21 Sections describing inputs shall designate input modules by name, slot, module, and terminal location.

3.22 The last sheet in the set shall be for terminal block designations each containing their individual terminal numbers.

3.23 At the time the equipment is shipped, one (1) reproducible copy of each drawing mentioned above shall be provided with the equipment.

4.00 Design Description

4.01 A major consideration of the programmable controller system shall be its modular, field expandable design allowing the system to be tailored to the customer's machine and/or process control application. The capability shall exist to allow for expansion of the system by the addition of hardware and/or user software.

4.02 The processor plus input and output circuitry shall be of a modular design with interchangeability provided for all similar modules.

4.03 Modules are defined herein as devices that plug into a chassis and are keyed to allow installation in only one direction. The design must prohibit upside down insertion of the modules. The programmable controller system must be able to determine the correctness of the module and chassis configuration prior to executing the user program.

4.04 The programmable controller shall have downward compatibility whereby all new module designs can be interchanged with all similar modules in an effort to reduce obsolescence.

4.05 All hardware of the programmable controller shall operate at an ambient temperature of 0° to 60°C (32° to 140°F), with an ambient temperature rating for storage of - 40° to + 85°C (-40° to + 185°F).

4.06 The programmable controller hardware shall function continuously in the relative humidity range of 5% to 95% (non-condensing).

4.07 The programmable controller system shall be designed and tested to operate in the high electrical noise environment of an industrial plant.

4.08 The programmable controller system shall be UL listed and CSA certified.

4.09 The CPU shall have the capability of addressing up to 4096 input and 4096 output points.

4.10 Each input and output module shall be a self-contained unit.

4.11 The programmable controller system shall include the capability of addressing remote input and output modules up to 2,000 cable feet from the processor as an optional module. The communication link between the module and any remote input and output distribution chassis shall be via a 20 AWG tinned copper twinaxial cable with braided and foil shields. The communications baud rate to the remote locations shall be at least 57.6 Kbaud and user selectable on a per module basis. If the maximum distance is reduced to 1000 cable feet, the communications speed shall be increased to 115.2 Kbaud. For racks located on a link of less than 500 cable feet, the speed shall be increased to 230.4 Kbaud.

4.12 The total allowable length of a segment containing standard RG-6 quad shield coaxial cable depends upon the number of taps in your segment. There is no minimum trunk-cable section length requirement. The maximum allowable total length of a segment is 1,000m (3,280ft) with two taps connected. Each additional tap decreases the maximum length of the segment by 16.3m (53ft). The maximum number of taps allowed on a segment is 48 with a maximum length of 250m (820ft).

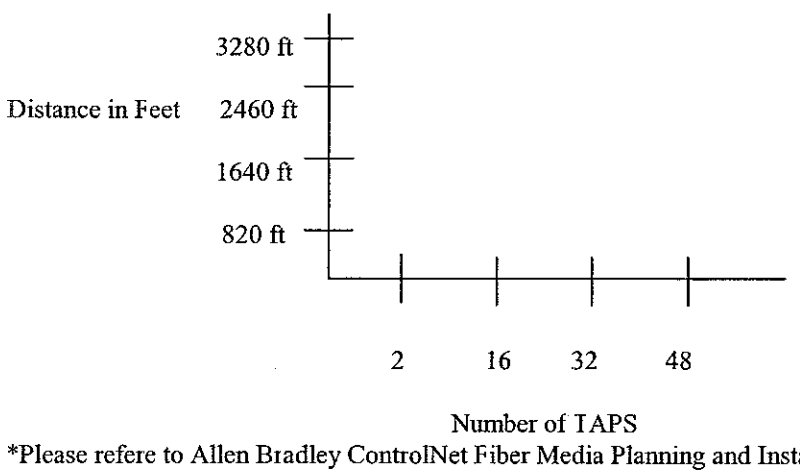

*Please refere to Allen Bradley ControlNet Fiber Media Planning and Installation Guide 1756 Series

4.13 The programmable controller shall use multiple independent scans designated for processing of input and output information, program logic, and background processing of other processor tasks. Discrete input and output modules located in the same backplane (slots 1-7) as the CPU should be scanned in under 32 microseconds per module. The processing of a typical logic program shall not exceed 0.5 to 2 milliseconds for 1024 instructions with a maximum overhead of 0.6 milliseconds.

4.14 The programmable controller system shall be capable of being configured with a redundant processor to allow uninterrupted control of remote inputs and outputs in the event of a primary processor failure.

4.14 The Programmable Controller shall have one dedicated serial port that supports RS-232-C signals. It shall be accessible in ladder logic and provide support for Point to Point and Slave SCADA communication protocol systems. Alternatively, it must be usable for programming purposes or for access to remote programmers via modems.

4.15 The Programmable Controller shall have one dedicated serial port which supports RS-485 signals. It shall be accessible in ladder logic and provide support for DH485 protocol systems. It must be usable for programming purposes.

4.16 The Programmable controller shall execute boolean conditional instructions (or contacts) within 0.45 microsecends each. The Programmable controller shall execute boolean output instructions (or coils) within 0.64 microsecends each. The Programmable controller shall execute 3 operand (x 16 bit) Add and Subtract instructions within 1.71 microsecends each. The Programmable controller shall execute 2 operand (x 16 bit) comparison (=, /=, <, < or =, >, > or =) instructions within 1.26 microsecends each. The Programmable controller shall execute 3 operand (x 16 bit) circular comparison (or limit) instructions within 1.96 microsecends each. The Programmable controller shall execute 2 operand (x 16 bit) Move instructions within 1.26 microsecends each.

5.00 <u>Main Frame Hardware</u>

5.01 The PLC shall have a modular chassis design that allows for ease of future expansion. The processor module shall be easily removed from the I/O chassis for service or repair. The I/O chassis shall have slots for installing I/O cards, communications, or other special function modules. All I/O cards and modules, with the exception of the CPU, shall be capable of being installed in any open slot in the chassis.

5.02 Slotted I/O chassis shall be Allen Bradley 1756-A7 ControlLogix 7 slot chasis.

5.03 The PLC system must have the ability to add expansion chassis(s) to the main chassis without the use of a remote I/O adapter module. Passive extension or ribbon cables are acceptable for the extension chassis(s). Product shall be of hook and hang design and suitable for mounting on an enclosure sub-panel.

5.04 The CPU shall be a self-contained unit, and will provide Ladder Rung program execution and support remote or local programming. This device will also supply I/O scanning and inter- processor and peripheral communication functions.

5.05 The operating system shall be contained in permanently mounted yet reprogrammable devices that allow for easy field upgrades without the need of tools.

5.06 In a single chassis system all system and signal power to the CPU, support modules shall be distributed on a single motherboard or backplane. No interconnecting wiring between these modules via plug-terminated jumpers shall be acceptable.

5.07 The CPU within the system shall perform internal diagnostic checking and give visual indication to the user by illuminating a "green" indicator when no fault is detected and a "red" indicator when a fault is detected.

5.08 All system modules, main and expansion chassis shall be designed to provide for free air flow convection cooling.

5.09 The main chassis front panel shall include indicators showing the following status information:

A. Non-Run or Run mode of the CPU
B. The fault status of the CPU
C. Battery status
D. Communications status for channels 0 and 1
E. Forces Present/Active

5.10 Processor mode shall be selected by a keyswitch mounted on the front panel of the CPU. The key shall select the following modes: RUN - No ladder edits possible, program always executing; PROGRAM - Programming allowed, program execution disabled; and REMOTE - Programming terminal can make edits and change processor mode, including TEST mode, whereby the logic executes and inputs are monitored, but output states are not changed.

5.11 The CPU shall be Allen Bradley L55M22 with 750 k/b of NV memory.

6.00 Power Supplies

6.01 The programmable controller shall operate in compliance with an electrical service of either 120 VAC, single phase, in the frequency range from 47 to 63 Hz.

6.02 The programmable controller shall have a modular power supply that mounts directly to the I/O chassis and can be easily serviced or replaced. The system shall be capable of being powered on 120VAC or 24VDC by simply choosing different power supply modules. The manufacturer shall be able to provide as standard equipment, a system power supply capable of converting line power to the DC power required to by the programmable controller system.

6.03 A single main power supply shall have the capability of supplying power to the CPU and local input/output modules. Auxiliary power supplies shall provide power to each expansion chassis.

6.04 The power supply shall automatically shut down the programmable controller system whenever its output current is detected as being excessive.

6.05 When the power supply is wired to utilize 120 VAC power, the system shall function properly within the range of 85 to 132 VAC. The power supply shall provide surge protection, isolation, and outage carry-over of at least 1 cycle of the AC line.

6.06 In cases where the AC line is especially unstable or subject to unusual variations it shall be possible to install a constant voltage transformer having a sinusoidal output waveform.

6.07 Design features of the programmable controller power supply shall include diagnostic indicators mounted in a position to be easily viewed by the user. These indicators shall provide the operator with the status of AC and DC power applied.

6.08 At the time of power-up, the power supply shall inhibit operation of the processor and I/O modules until the DC voltages are within specifications.

6.09 The power supply shall be Allen Bradley 1756 –PA72

7.00 Program Storage

7.01 The processor shall have solid-state RAM memory to store the application program, process data, and alarm status. This memory shall have both capacitor and battery backup in the event that input power to the processor is lost.

7.02 Memory shall contain battery back up capable of retaining all stored program data through a continuous power outage for 24 months under worst-case conditions. The capability shall exist to replace the CPU's battery without incurring a loss of user program. A low battery condition must be detectable in ladder logic, but shall not automatically generate a major fault

7.03 The programmable controller system shall be capable of addressing up to 16 K words, where each word is comprised of 16 data bits.

7.04 Memory shall be available in 12 K with additional 4 K data word segments of RAM memory.

7.05 The programmable controller system should provide the capability to use EEPROM as a backup for volatile memory up to the full capacity of the controller. The EEPROM backup memory shall have the capability to automatically reload the memory on a power cycle.

7.06 The operator should be able to backup volatile memory, including data and program logic onto either a 3 1/2 inch floppy diskette or hard disk, at their option.

7.07 All user memory in the processor not used for program storage shall be allocatable from main memory for the purpose of data storage. The programmable controller system shall be capable of storing the following data types:

1) External Output Status
2) External Input Status
3) Timer Values
4) Counter Values
5) Signed Integer Numbers (16 bit)
8) Binary Numbers
9) BCD Numbers
10) Direct and Indexed addressing
11) Internal Processor Status Information
12) ASCII Character Data

The above listed data types shall be distinguishable to the CPU by the addressing format. Management of the data types into memory subsections shall be an automatic function of the CPU operating system. Any data can be displayed in Binary, Octal, Hexadecimal, Decimal, or ASCII radices. Function-specific data types such as PID, Message, or Processor Status shall have dedicated displays available annotating the meaning of specific control bits and words within them and allowing for selective control where appropriate.

7.08 If contacts or entire rungs are intentionally deleted from an existing logic program, the remaining program shall be automatically repositioned to fill this void. Whenever contacts

or entire rungs are intentionally inserted into an existing program, the original program shall automatically be repositioned to accommodate the enlarged program.

7.09 To reduce the effective scan time in order to detect short pulse duration inputs, it shall be possible to program a select logic rung more than once into memory.

7.10 The number of times a normally open (N.O.) and/or normally closed (N.C.) contact of an internal output can be programmed shall be limited only by the memory capacity to store these instructions.

7.11 Ladder logic programs shall have immediate access to the subelements of control structures by address and subelement mnemonic, such as timer accumulator value or timer done bit.

8.00 Input and Output - General

8.01 Each input or output module shall be a self-contained unit housed within an enclosure.

8.02 The input/output enclosure (chassis) with its respective modules shall be of universal type, and compatible with several programmable controllers manufactured by the supplier. Racks shall be sized to accommodate I/O in increments of 2,4,7,10, or 13 slots per chassis. A maximum of 3 chassis may be interconnected and directly controlled by the local CPU I/O scan.

8.03 The PLC system must have the ability to add expansion chassis(s) to the main chassis without the use of a remote I/O adapter module. Passive extension or ribbon cables are acceptable for the extension chassis(s). Product shall be of hook and hang design and suitable for mounting on an enclosure sub-panel.

8.04 Isolation shall be used between all internal logic and external power circuits. This isolation shall meet the minimum specification of 500 VRMS.

8.05 It shall be possible to replace any 8 or 16 point input or output module without disturbing field wiring.

8.06 Each I/O module shall contain a visual indicator to display ON/OFF status of individual input or output points.

8.07 All user wiring to I/O modules shall be through a heavy-duty terminal strip. Pressure-type screw terminals shall be used to provide fast, secure wire connections.

8.08 All 8 point, 16 point, and specialty input/output modules shall be color coded and titled with a distinctive label.

8.09 All input modules shall have a specified filter time constant to limit the effects of voltage transients.

9.00 Input and Output Modules

9.01 The programmable controller manufacturer shall offer discrete input/output hardware consisting of the following types:

Inputs:

A) AC input: for devices that operate at 120 Or 240 VAC, 50/60 Hz.
AC input modules shall be Allen Bradley 1756-IA16 ControlLogix

B) DC input: for devices that operate at 5 to 30 VDC.
DC input modules shall be Allen Bradley 1756-IB16 ControlLogix.

C) TTL (5 volt DC) input: for transistor-transistor logic with low true logic, compatible with input devices such as solid state control and measuring equipment.

Outputs:

A) AC output: for devices that operate at 120 VAC, 50/60 Hz shall be Allen Bradley 1756-0A8D ControlLogix.

B) AC output: for devices that operate at 220/240 VAC, 50/60 Hz shall be Allen Bradley 1756-0A8 ControlLogix.

C) AC output: for devices that operate at 24 VAC, 50/60 Hz shall be Allen Bradley 1756-0N8 ControlLogix.

D) DC output: for devices that operate at 10 to 60 VDC shall be Allen Bradley 1756-0B8 ControlLogix.

E) Isolated Contact output: which provides eight (8) isolated outputs capable of switching 120 VAC, 220 VAC, or 24 VDC power shall be Allen Bradley 1756-0X8I ControlLogix.

9.02 Analog I/O modules

A) Analog input which accepts analog signals and converts them to sixteen (16) bit binary values. Digital resolution shall be available in 1 part in 65536 voltage or 1 part in 32767 current. Analog inputs shall be differential. Analog inputs shall be Allen Bradley 1756-IF8 ControlLogix.

B) Analog output which converts a fifteen (15) bit current or sixteen (16) bit voltage binary number (14 bit resolution) into an equivalent single-ended analog output signal. Analog outputs shall be Allen Bradley 1756-0F8 ControlLogix.

9.03 Specialized input modules of the following types shall be available:

A) Thermocouple input module that reads millivolt signals generated by thermocouple or millivolt devices. These signals shall be displayed as either 14 bit binary, 16 bit binary, tenths of a degree, whole degrees, hundredths of a millivolt or tenths of a millivolt. Thermocouple types E, J, K, T, B, R, N, and S are compatible with this module. Over-range, Under-range, and open circuit detection will be provided as standard status to the CPU. Up to four types of thermocouples can be connected to a single card simultaneously.

9.04 Communication moduals shall be Allen Bradley 1756-CNB

10.00 Interfacing and Peripherals

10.01 The programming means shall be an IBM or compatible, portable, or industrial quality-programming terminal.

10.02 The terminal keyboard shall allow for loading of the program format and ASCII characters.

10.03 The terminal shall be able to function as a stand-alone ASCII (alphanumeric) data terminal with an RS-232-C interface allowing connection to an in-house computer, data terminal, or modem.

10.04 The programming terminal shall be compatible for interfacing with an electrical service of either 120 VAC, 50/60 Hz. or 220 VAC, 50/60 Hz.

10.05 The terminal shall provide for selecting the communication rate between 110 and 19200 baud for RS-232-C communications.

10.06 The terminal shall be capable of displaying a minimum of thirty (30) graphic (line drawing) characters.

10.07 The programming terminal shall be capable of displaying a rung consisting of a maximum of seven (7) series elements and six (6) parallel elements.

10.09 The means to indicate contact or output status shall be by intensification of the contact or output on the CRT screen. Each element's status shall be shown independently, regardless of circuit configuration.

10.10 The programmable controller system shall be able to interface with a data terminal which is RS-232-C compatible (up to 19200 baud) to generate hard copy logic diagrams and/or message generation.

10.11 The system shall have the capability to interface to a 3 1/2 inch magnetic floppy disk and/or a hard disk for loading a user program into, or recording the contents of, the processor's memory. It shall be possible to load or record the entire contents or selected portions of memory.

10.12 The communication network shall support the following features:

A) Token passing system
B) Peer-to-peer communication
C) Message error checking
D) Retries of unacknowledged messages
E) Diagnostic checks on other stations
F) Interface to more than one network
G) A user-oriented command language for manipulation of data structures of variable size and organization, such as setting or resetting bits, word and file transfers, and program loading.
H) Bi-directional communication between the programmable controllers and the communication network via a standard modem interface The protocols shall meet ANSI standard.
I) The ability to communicate with all other models of programmable controller manufactured by said manufacturer.

J) The ability to monitor the status of any processor remotely via the network.

11.00 Programming Techniques

11.01 The programming format shall be traditional relay ladder diagram.

11.02 It shall be possible to program a maximum instruction matrix containing as many as 128 instructions.

11.03 The capability shall exist to change a contact from normally open to normally closed, add instructions, change addresses, etc. It shall not be necessary to delete and reprogram the entire rung.

11.04 It shall be possible to insert relay ladder diagram rungs anywhere in the program, even between existing rungs, insofar as there is sufficient memory to accommodate these additions.

11.05 A single program command or instruction shall suffice to delete an individual ladder diagram rung from memory It shall not be necessary to delete the rung contact by contact.

11.06 It shall be necessary to issue a two-part command in order to delete all relay ladder rungs from memory. This will provide a safeguard wherein the operator must verify their intentions before erasing the entire program.

11.07 A clock/calendar feature shall be included within the CPU. Access to the time and date shall be from the programming terminal, user program, or message generation.

11.08 Latch functions shall be internal and programmable.

11.09 The system shall have the capability to address software timers and software counters in any combination and quantity up to the limit of available memory. The CPU shall handle all management of these instructions into memory. Instructions shall permit programming timers in the "ON" or "OFF" delay modes. Timer programming shall also include the capability to interrupt timing without resetting the timers. Counters shall be programmable using up-increment and down-increment.

11.10 Timer instructions shall include selectable time bases in increments of 1.0 second and 10 milliseconds. The timing range of each timer shall be from 0 to 32,767 increments. It shall be possible to program and display separately the timer's preset and accumulated values.

11.11 The programmable controller shall use a signed integer format ranging from -32,768 to +32,767 for data storage of the counter preset and accumulated values.

11.12 The programmable controller shall store data in the following formats:

A) Signed Integer Numbers ranging from -32,768 to +32,767.

11.13 The programmable controller shall have support for integer signed math functions consisting of addition, subtraction, multiplication, division, and square root.

11.14 When using modules such as analog where multiple channels are terminated on one module, it shall be possible to transfer the current status of all channels to the CPU upon execution

of one program instruction. This instruction shall be bidirectional to include data transfer from the CPU to the module or from the module to the CPU.

11.15 Instructions shall be provided for grouping contiguous 16 bit data words into a file. The system shall address up to 256 files with up to 256 words per file. File manipulation instructions such as high-speed "file copy" and "file fill", "file to file" move, "element to file" move, "file to element" move, and "first in-first out" shall be supported by the system. The four function math instructions and instructions for performing "logical OR", "logical AND", "exclusive OR", and comparison instructions such as "less than", "greater than", and "equal to" shall be included within the system. All instructions shall execute on either single words or files.

11.16 The system shall contain instructions that will construct synchronous 16 bit word shift registers. Additional instructions shall be provided to construct synchronous bit shift registers.

11.17 The programmable controller shall have a jump instruction which will allow the programmer to jump over portions of the user program to a portion marked by a matching label instruction.

11.18 In applications requiring repeatable logic rungs it shall be possible to place such rungs in a subroutine section. Instructions that call the subroutine and return to the main program shall be included within the system. It shall be possible to program several subroutines and define each subroutine by a unique label. The processor will support nesting of subroutines up to eight levels deep. The program format as displayed on the CRT shall clearly define the main program and all subroutines.

11.19 The program format shall display all instructions on a CRT programming panel with appropriate mnemonics to define all data entered by the programmer. The system shall be capable of providing a "HELP" instruction which when called by the programmer will display on the CRT a list of instructions and all data required to enter an instruction into the system memory.

11.20 At the request of the programmer, data contained in system memory shall be displayed on the CRT programming panel. This monitoring feature shall be provided for input/output status, timer/counter data, files, and system status. Ladder logic rungs shall be displayed on the CRT with rung numbers in sequential order.

11.21 The system shall have the capability to enter rung comments above ladder logic rungs. These comments may be entered at the same time the ladder logic is entered

11.22 The capability shall exist for adding, removing, or modifying ladder logic rungs during program execution. When changes to ladder logic are made or new logic rungs are added, it shall be possible to test the edits of such rungs before removal of the prior logic rung is executed.

11.23 It shall be possible to manually set (force) either on or off all hardwired input or output points or Analog values from the CRT programming panel or the main chassis front panel. Removal of these forced I/O points shall be either individually or totally through selected keystrokes. The programming terminal shall be able to display forced I/O points.

11.24 The execution of the program logic shall be accelerated by scanning the rung only until a positive decision as to the state of the outputs has been made. In many cases this will mean skipping over logic elements if the output condition has been predetermined.

11.25 A means to program a fault recovery routine shall exist. When a major system fault occurs in the system, the fault recovery routine shall be executed and then the system shall determine if the fault has been eliminated. If the fault is eliminated, program execution resumes. If the fault still exists, the system will shut down.

11.26 An interrupt routine shall be programmable such that the routine shall be executed regularly. The interval at which the routine is executed shall be user-specified in the range of 1 to 32767 milliseconds. This routine must be able to close an asynchronous control loop consisting of 32 Input points, 32 output points, 100 contact/coils, 10 addition instructions, 10 subtraction instructions and 32 circular comparison (Limit) instructions while never exceeding a 2 millisecond interval. The measurement of this interval is from the Input filter delay time to the time that the physical output transitions

11.27 The ability to program ladder logic via symbols from the global database of the programmable controller shall exist.

11.28 An instruction shall be supported to incorporate closed loop control systems. The "proportional", "integral", and "derivative" elements shall be accessible to the user in order to tune a closed loop system.

11.29 The CPU shall support indexed addressing of inputs and outputs, along with all data table words (integer, binary, timers, and counters) for the software instruction set.

11.30 The system shall support both bit and word level diagnostic instructions.

11.31 To facilitate conditional event detection programming, output instructions shall include a "one shot" instruction that may be triggered on the low-to-high (rising) rung condition.

11.32 The processor shall support Master Control Reset (Relay) type functionality to selectively disable sections of relay ladder logic.

11.33 An interrupt routine shall be programmable such that the routines shall be executed based upon the input conditions of up to eight discrete hardware inputs in the processor chassis. The routine will be executed within 500 microseconds of the detection of the input signals. The 8 inputs will be repetitively examined/scanned within a 100 microsecond time period.

12.00 Diagnostics

12.01 The processor shall have built-in diagnostics and self-test, such that each time power is cycled, the processor does a complete CPU and RAM memory test. Additionally the power-up test will momentarily light up all diagnostic LED's to be sure they are working. The processor shall be capable of reporting major and minor fault codes and processor status information back to the polling master, provided the fault is not a catastrophic hardware failure where the processor is unable to power up.

12.02 The processor shall have a built-in watchdog timer to ensure that all processor program scans occur within the time limit set by the watchdog timer. The watchdog timer cycle shall be adjustable from 20 msec to 2.5 seconds in 10 msec increments.

APPENDIX G

Response to Comments

WESTON

Response to Comments

Draft 100 Percent Design Submittal, SGU Remedial Action, IRP Site 24, Volatile Organic Compounds Source Area, MCAS El Toro, Irvine, CA

Document Title:	1. Draft 100 Percent Design Submittal, Shallow Groundwater Unit Remedial Action, IRP Site 24, Volatile Organic Compounds Source Area, December 2004
Reviewer:	Richard Muza, Remedial Project Manager, Federal Facilities and Site Cleanup Branch, United States Environmental Protection Agency, Region IX, comments dated January 20, 2005

Comment/ (Doc. No.)		Section, Page No.	Comment	Response
The EPA has reviewed the subject document with a focus on the Department of the Navy's (DoN) response to our comments on previous design submittals. We approve the 100 Percent Design Submittal for Site 24 at MCAS El Toro as presented and provide the following comments for the DoN's consideration in implementing this remedial action.				
1	(1)	Section 4.4.1.1, Page 4-8	It is recommended that no worker enter a trench that is greater than five feet deep unless that trench has been properly-shored; the "competent person" must agree that the trench has been properly shored.	As recommended, the text has been revised to state that workers will not enter a trench that is greater than five feet deep unless that trench has been properly-shored and the Competent Person has agreed that the trench has been properly shored.
2	(1)	Section 7, General	The proposed boundary and off-site (IRP Site 18) monitoring network is rather limited in extent. EPA has concerns as to whether the proposed locations will be adequate to evaluate capture at the base boundary and off-site. It is recommended that the DoN's plans allow for adding monitoring wells based on data gaps evaluations after the system is in operation.	The Navy agrees to develop a monitoring plan that allows for adding wells based on data gap evaluations after the system is in operation.
3	(1)	Appendix F, Design Specifications, Section 02525, Page 4	The DoN has concluded that there is no need for water-tight well vaults. The extraction wells to be installed under this effort fall into a grey area of the regulations. If the wells were being used as water supply wells, pitless adapters would be required; if the wells were being used for monitoring, water-tight well vaults would be required. Wells being used to extract ground water for production of grey-water do not fall into either category. It is recommended that the DoN discuss this issue with the controlling agency (i.e., Orange County Environmental Health Department) to assure that the Department agrees that water-tight well vaults are not required in this case since retrofitting the vaults at a later time will be expensive.	Based on previous site-specific Navy experience in well installations at former MCAS El Toro, water-tight well vaults are not necessary for the extraction wells. The well design incorporates appropriate seals, and the wellheads are part of a closed system.
4	(1)	Appendix H, Construction Quality Control Plan, Appendix G	There is still some confusion in the checklists regarding the different purposes of the preparatory, initial, and follow-up inspections. It is recommended that the Navy review the Naval Facilities Command Unified Facilities Guide Specification UFGS-01450N (Construction Quality Control) dated April 2004 for definitions and revise the checklists as necessary.	The Navy reviewed the checklists and inspection processes and found them to be satisfactory during a construction kickoff meeting held on March 10, 2005.

WESTON

Response to Comments

Draft 100 Percent Design Submittal, SGU Remedial Action, IRP Site 24, Volatile Organic Compounds Source Area, MCAS El Toro, Irvine, CA

Document Title:	1. Draft 100 Percent Design Submittal, Shallow Groundwater Unit Remedial Action, IRP Site 24, Volatile Organic Compounds Source Area, December 2004
Reviewer:	Tayseer Mahmoud, Senior Hazardous Substances Engineer, Office of Military Facilities, Department of Toxic Substances Control, comments dated January 14, 2005

Comment/ Doc. No.)		Section, Page No.	Comment	Response
Based on our review of the document and responses to DTSC's comments dated August 2, 2004, this 100 percent design submittal for the Shallow Groundwater Unit is conditionally approved subject to the following conditions:				
1	(1)		Response to Specific Comments #2 & #5: It is acceptable to use view ports for leak detection observation instead of remote leak detection system. However, more labor intensive inspections need to be included in the Operation and Maintenance (O&M) Manual when the manual is developed.	As recommended, the Navy agrees to include inspections of leak detection ports in the O&M Manual.
2	(1)		Response to Specific Comment #12: DTSC prefers Summa canisters instead of Tedlar bags for the collection of vapor samples. The collection methodology, holding time, etc. may be addressed in the O&M manual.	Soil vapor samples will be obtained in Summa canisters for the startup and shutdown sampling at each of the soil vapor extraction wells. The text on page 6-2 of the Final 100 Percent Design has been revised accordingly. As recommended, the collection methodology, holding time, and other pertinent sampling information will be included in the O&M Manual.

WESTON

Response to Comments

Draft 100 Percent Design Submittal, SGU Remedial Action, IRP Site 24, Volatile Organic Compounds Source Area, MCAS El Toro, Irvine, CA

Document Title:	1. Draft 100 Percent Design Submittal, Shallow Groundwater Unit Remedial Action, IRP Site 24, Volatile Organic Compounds Source Area, December 2004
Reviewer:	John Broderick, California Regional Water Quality Control Board, Santa Ana Region, informal comments presented during the BCT meeting of January 26, 2005, and "no comments" letter dated January 31, 2005

Comment / (Doc. No.)		Section, Page No.	Comment	Response
1	(1)		TO-14 was the proposed analytical method for soil vapor samples. Evaluate EPA methods TO-14A and TO-15 for potential substitution of TO-14.	The newer methods for determination of volatile organic compounds in vapor are TO-14A and TO-15. TO-15 has the most sensitive reporting limit, and has been selected as the method for laboratory analysis of soil vapor samples at Site 24. The text on page 6-2 of the Final 100 Percent Design has been revised accordingly.
2	(1)		Check OSHA regulations to evaluate whether the extraction well vaults are a confined space.	According to the OSHA regulations in 29 CFR 1926.21.B.6.iii, the vaults are not a confined space: (1) Vaults are less than 4-feet in depth, (2) access and egress is not limited, (3) vaults are not subject to the accumulation of a toxic, flammable, or oxygen deficient atmosphere. As a safety precaution, the vault atmosphere will be tested prior to entry. The text on page 7-2 has been revised to state that prior to entry the air within the vaults will be monitored (via PID, 4-gas, and LEL/O2 meter) for the presence of a toxic, flammable, and oxygen deficient atmosphere. Well vaults will be entered only after air monitoring indicates it is safe to do so.
3	(1)		We have reviewed the above referenced document, dated December 2004, which we received on December 15, 2004. We have no comments.	Comment noted.

Document Title: 1. Draft 90% Design
2. Draft Final Construction Quality Control Plan (CQCP) – Appendix H
3. Draft Final Contingency Plan - Appendix I

Reviewer: Nicole Moutoux, Project Manager, Federal Facilities Cleanup Branch, United States Environmental Protection Agency, Region IX

Comment/ (Doc. No.)		Section, Page No.	Comment	Response
General Comments				
1	(1)	General	The organization of the project (roles of Weston and Earth Technology) is only clearly defined in the Contingency Plan (Appendix I). For clarity, please provide this project organizational material in the main text as well.	Sections 4.1 through 4.1.4 now contain descriptive information regarding the project roles.
Specific Comments				
1	(1)	Section 4.3 Piping Network Installation, Page 4-5	Drawing C-11 is referred to for a typical trench cross-section; however, C-11 does not include a trench cross-section. On Page 4-6, the design document states that a typical trench cross-section will be provided in the Draft Final 90 Percent Design. However, a draft final 90 percent design is not included in the project schedule, Figure 3. Please include detailed cross-sections for each segment of trench that contains a different configuration of utilities and pipe diameters.	A typical cross section for the main header pipeline is shown on Drawing C-11. Additional details for different configurations are shown on C-13.
2	(1)	Section 4.3.4 Connection to Modified IDP System, Page 4-7	It does not appear that the design documents contain sufficient detail regarding the connection to the Irvine Desalter Project (IDP) system to enable the contractor to perform this work. Please revise the design documents to describe in detail how the extraction system piping will be connected to the IDP treatment system, including appropriate procedures and detail drawings which specify pipe sizes, types, fittings, lengths, etc.	Based on discussions and coordination with OCWD/IRWD, a 6-inch HDPE SDR-11 below-grade pipeline will be connected to the discharge line of the SGU compound. This pipe will extend from the SGU compound to the MCAS property line adjacent to the IRWD treatment plant's Point of Connection. This HDPE pipe will be stubbed up and will have a blind flange. There will be communication cable, conduit, and conductors in the trench with the HDPE pipe. The IRWD will make their connection to the 6-inch HDPE pipe at the Point of Connection. Cross section trench details are shown on C-13, as requested.
3	(1)	Section 4.3.1.1, Excavation, Page 4-5	The requirements for protecting workers in trenches vary between Section 4.3.1.1 and Specification Section 02222. Title 8 of the California Code of Regulations (CCR), Subchapter 4. Construction Safety Orders, Article 6. Excavations, Section 1541.1 Requirements for Protective Systems provides detailed requirements for protecting workers. Protection for workers is required unless the trench is less than 5 feet deep and a competent person determines there is no potential for cave-in. In the event that any trenches are constructed for this project that are more than 5 feet deep and which workers may be present, please revise the design submittal to indicate that all of the applicable provisions of the CCR will be complied with rather than,	Text in the Draft 100% Design and Specification 02222 have been coordinated for consistency. The revised text is located in Section 4.4.1.1 as recommended in the comment.

Document Title: 1. Draft 90% Design
2. Draft Final Construction Quality Control Plan (CQCP) – Appendix H
3. Draft Final Contingency Plan - Appendix I

Reviewer: Nicole Moutoux, Project Manager, Federal Facilities Cleanup Branch, United States Environmental Protection Agency, Region IX

Comment/ (Doc. No.)		Section, Page No.	Comment	Response
			"Trenches greater than 4 feet deep will be evaluated for shoring or sloping measures required to ensure the protection of workers." Specifically, please assure that a "competent person" (as defined in the CCR) inspects all trenches into which workers may enter, regardless of depth, and that the "competent person" does not see any indication of a potential cave-in.	
Appendix C, Drawings				
1	(1)	Drawing M-3, Mechanical Details	The drawing of the equalization tank and associated piping is incomplete. It does not include the carbon filter, valves and fittings are not labeled or described, and sizes are not indicated. Please revise this drawing to show sufficient detail for construction.	Details for the equalization tank, associated piping, and carbon vessel are shown on M-3 as recommended in the comment. Valve and equipment sizes are shown in the table on M-3. Tank size is shown on P-2.
2	(1)	Drawing S-1, Structural Details	The slab design does not include subgrade, reinforcement, thickness, or concrete mix design. Please provide the design for the slab in the draft final 90 percent design. Additionally, please include the seismic/wind calculations for the equipment anchors.	Drawing S-1 contains the structural design details that are based on the results of the geotechnical investigation. Details for the subgrade, slab thickness, steel reinforcements, and concrete mix design are included in the Drawing. Section 3.5 refers the reader to the seismic and wind calculations for equipment anchors that are located in Appendix E.
Appendix E, Engineering Calculations for Pipe Design				
1	(1)	Section E4.i	Extraction Well Pumps: The pumps recommended as a result of the calculations presented in this appendix are Grundfos Redi-Flo3; however, different models of Grundfos pumps are listed in Specification Section 11212. Please revise the design documents to provide calculations which support the selection of Grundfos Models 10S20-27, 10515-21, and 16S 15-14 rather than the Grundfos Redi-Flo series. Also, the pumping head and flow rate for each well listed in the specifications are different from those use in the calculations. Please revise the calculations to use the specified data.	Appendix E has been revised. Calculations for the Grundfos S Series pumps have replaced the calculations for the Redi-Flo pumps.
2	(1)	Table E.1-3	Miscellaneous Calculation Notes: This table provides key information for interpreting the calculations presented only in summary form in Table E- 1; however, this table seems to be missing information and sentences are cut-off. Please revise this table to provide complete information.	Table E-1 has been corrected. In addition, calculations for the S Series Grundfos pumps are included in Appendix E (Table E-1 and E-1.1).

Document Title: 1. Draft 90% Design
2. Draft Final Construction Quality Control Plan (CQCP) – Appendix H
3. Draft Final Contingency Plan - Appendix I

Reviewer: Nicole Moutoux, Project Manager, Federal Facilities Cleanup Branch, United States Environmental Protection Agency, Region IX

Comment/ (Doc. No.)		Section, Page No.	Comment	Response
Appendix F, Design Specifications				
1	(1)	Specification Section 01355	Environmental Protection: This specification is incomplete. For example, paragraph 3.11 states that contaminated environmental media . . . shall be managed, but does not state how this will be done. If Specification Section 02120, Transportation and Disposal of Remediation Derived Wastes, is meant to apply here, it should be clearly stated.	Specification 01355, Paragraph 3.11 directs the reader to Specification 02120 for transportation and disposal.
2	(1)	Specification Section 01770, Closeout Procedures, Page 1	Specification Section 01770, Closeout Procedures, Page 1: The required accuracy for vertical surveying listed in the specification is 0.1 feet. Vertical surveys can be controlled much more accurately than 0.1 feet, though 0.1 feet may be sufficient if the groundwater gradient is steep. Typically, depths to groundwater are measured to the nearest 0.01 feet, which is required for this project, which implies a need for higher order accuracy of the casing survey. Please consider whether 0.1 feet is sufficiently accurate for conditions at El Toro and revise the specification if required.	A vertical land survey accuracy of 0.1 feet is sufficient for the top of casing. Depth to groundwater will be measured with a tape to the nearest 0.01 feet.
3	(1)	Specification Section 02222, Excavation, Trenching, and Backfill, Page 3	The specification states that pipe and conduit trenches shall be excavated as recommended by the manufacturer of the pipe; however, in this case the pipe and conduit are to be installed in combined trenches. Therefore, the manufacturer's recommendation for a particular type of pipe will not address the appropriate installation in this situation. Please revise the specifications to indicate how the trenches should be excavated for combined discharge pipe and conduit, and make sure the specification is consistent with both civil and electrical drawing details. In addition, paragraph 3.3 refers to the drawing for the warning tape depth, but warning tape is not shown on the drawings. Please include the depth of the warning tape on the drawings.	The design drawings (Drawings C-11, C-13, and E-1.3) include the trench details for excavation, backfill, compaction, warning tape, and/or pipe/conduit installation. Metallic warning tape will be placed at 18-inches below ground surface and above the utility to be marked, as shown on Drawings C-11 and C-13 and as described in Paragraph 3.3 of Specification 02222.
4	(1)	Specification Section 02525, Extraction Wells, Page 3	The specification contains grain-size requirements for the extraction well filter packs. Typically, filter packs are selected in the field based on formation grain sizes. The Navy may have sufficient experience at El Toro to be able to select filter pack gradations in advance. Please consider whether filter pack gradations should be selected in the field and revise the specification if necessary.	Filter pack size is based on extensive previous experience at the site.

Document Title:
1. Draft 90% Design
2. Draft Final Construction Quality Control Plan (CQCP) – Appendix H
3. Draft Final Contingency Plan - Appendix I

Reviewer: Nicole Moutoux, Project Manager, Federal Facilities Cleanup Branch, United States Environmental Protection Agency, Region IX

Comment/ (Doc. No.)		Section, Page No.	Comment	Response
5	(1)	Specification Section 02525, Extraction Wells, Page 4	According to the design narrative, page 4-5, the vault boxes will be provided with water-tight covers; however, this is not indicated in the specification. Please revise the specification, paragraph 2.8.1, to specify that water-tight vault covers shall be provided.	Water-tight vault boxes will not be provided. The text has been revised for consistency in Specification 02525 (paragraph 2.8.1) and in the Design text (3.2.3.2, second bullet).
6	(1)	Specification Section 02525, Extraction Wells, Page 5	Please indicate the types of samples to be collected from the boreholes and the intervals at which the samples will be collected.	Grab samples of soil cuttings will be collected and logged for lithologic description: samples will be obtained from the shale shaker every 10 feet.
7	(1)	Specification Section 11246, High-Density Cross-Linked Polyethylene Tank, Page 4	Please include a specification for the air-phase granular activated carbon filter to be plumbed to the tank vent in the accessories section.	Specification Section 15101 has been added for the vapor-phase carbon drum.
8	(1)	Specification Section 15065, HDPE Pipe, Fittings, and Flanges, Page 3	The final backfill compaction is specified to be 90 percent Standard Proctor. This contradicts the compaction specified in Section 02222 of 95 percent. Please correct this discrepancy.	Consistency in the text of Specifications Sections 02222 (paragraph 3.4.1) and 15065 (paragraph 3.3.2.2) has been coordinated: 90% Modified Proctor will be used in roadways and where specified in the Drawings, 90% Standard Proctor will be used in other areas or where indicated on the Drawings.
Appendix H, Construction Quality Control Plan				
1	(1)		It appears that this CQCP was prepared by Weston to be used to verify that the work is conducted in accordance with the Weston (February 2004) Remedial Action Work Plan (RAWP). Section 01110 of the Specifications (Appendix F) indicates that a Quality Control Plan will be submitted along with a RAWP. A RAWP has already been prepared and this Appendix is a quality control plan. Please revise the document to indicate whether the Appendix H CQCP and the previously prepared RAWP are the only RAWPS and CQCPs to be prepared for this project. If so, the CQCP would be more appropriately attached to the RAWP, along with the Health and Safety Plan and other required documents.	Specification 01110 (paragraph 1.1.1) has been revised; the reference to the CQC Plan as part of the RAWP has been corrected to an "Appendix of the Design Submittal." The CQC Plan has a variety of forms that will be completed during construction and that relate, in particular, to the design, drawings, and specifications. Thus, the CQC Plan will remain with the design submittal.
2	(1)		The CQCP does not follow the format or content requirements of Specification Section 01450 Construction Quality Control. It does not follow the table of contents listed in section 1.6.2.1 which specifies the major sections that should be included and the order. The CQCP does not have the qualifications for each person in the QC organization in resume format; does not include a listing of outside organizations that will be employed by the Contractor; does not list the submittal reviewer(s) by name; and does not	Specification 01450 has been revised for consistency with the CQC Plan. Qualifications and resumes have been submitted to the Navy as a separate submittal. A listing of outside vendors will be submitted to the Navy under separate cover. A Testing Plan and Log has been added to the CQC Plan.

Document Title: 1. Draft 90% Design
2. Draft Final Construction Quality Control Plan (CQCP) – Appendix H
3. Draft Final Contingency Plan - Appendix I

Reviewer: Nicole Moutoux, Project Manager, Federal Facilities Cleanup Branch, United States Environmental Protection Agency, Region IX

Comment/ (Doc. No.)		Section, Page No.	Comment	Response
			include a testing plan and log including the specification paragraph requiring the test. Please revise the CQCP to include the required information in the required format.	
3	(1)		The CQCP indicates that it, "describes specific quality control (QC) activities that will be implemented during remediation work at IRP Site 24." However, the descriptions of specific activities are incomplete. The list of Definable Features of Work (DFW) on page 6-1 appears to be complete, but there is very little detail on what specific quality control activities will be conducted to assure that the DFW are conducted in accordance with the project plans and specifications. For example, the Appendix G (of Appendix H) checklist for Electrical Work asks the QC inspector, "Is all work in conformance with NEC, OSFIA and Cal OSHA requirements?" However, the checklist does not indicate which specific NEC, OSFIA, and Cal OSHA requirements are applicable to the work. The checklist for Concrete Work for Pad Installation asks, "Have all required submittals been submitted and approved for conformance with the Specifications?" Please revise the CQCP to list specific items that are to be verified during construction	Specific quality control activities to be verified during construction have been added to the CQC Plan and checklists.
4	(1)		The checklists in Appendix G (of Appendix H) divide the work up into three-phases: preparatory, initial and follow-up. However, the work described on the checklists is organized differently. The Army Corps of Engineers indicates (see Engineering Pamphlet EP 715-1-2, February 1990, A Guide to Effective Contractor Quality Control (CQC]) that the Initial Phase covers the start of actual work on a DFW while the follow-up phase consists of additional quality control inspections on the DFW - i.e., the first well installed is the initial work, subsequent well installation would be follow-up work. The checklists in Appendix G (of Appendix H) for the initial phase of work cover aspects of the work more appropriate for the preparatory phase and do not actually cover any of the work to be performed. Please revise the checklists for the Initial Phase to include the initial work for each DFW (e.g., the first well installed, the first segment of trench dug, the first segment of pipe installed et cetera). Please provide a procedure for determining the amount of follow-up inspection that will be performed for each DFW. Please revise the inspection checklists in Appendix G (of Appendix H) to correspond with the intent of	As the comment recommends, the checklists have been coordinated with the text of the CQC Plan for consistency.

Document Title:
1. Draft 90% Design
2. Draft Final Construction Quality Control Plan (CQCP) – Appendix H
3. Draft Final Contingency Plan - Appendix I

Reviewer: Nicole Moutoux, Project Manager, Federal Facilities Cleanup Branch, United States Environmental Protection Agency, Region IX

Comment/ (Doc. No.)		Section, Page No.	Comment	Response
			the CQCP.	
5	(1)		The Appendix G (of Appendix H) checklists do not contain enough specific details for the DFW that extend over large areas (well installation and trenching). For example, the trenching and backfilling checklists should be revised so that they can be used to document that the required tests were performed along the entire alignment of the pipelines, i.e., there should be a sheet for each segment of the trench where the QC inspector can document that they verified trench depths, trench bedding thicknesses and material qualities, pipe alignments, initial backfilling, each lift of backfilling, the Proctor curve used for backfill, the in-situ density and water content after compaction, construction methods, etc.	A sheet for major segments of the trench has been included in Attachment G (of Appendix H), including trench depths, bedding material, pipe alignments, haunching material, initial backfill, final backfill, the Proctor Curve, and in-situ density/moisture. The same form will be used for trench segments.
6	(1)	Appendix G (of Appendix H)	Each specific line item should include all requirements of the specification and the specific items to be verified. Please assure that all specification requirements that are to be verified are listed in the checklists.	The specification sections are called out on the checklists, as recommended.
RESPONSE TO PREVIOUS COMMENTS ON THE 60 PERCENT DESIGN SUBMITTAL				
1	(1)	Specific Comment No. 3	The original comment asked the Navy what tests it intended to run on the Toxicity Characteristic Leaching Potential (TCLP) extracts resulting from performing a leaching test on fill brought on to the site. The Navy revised Section 02222 to require that the fill be "certified" as clean. This response does not address the original comment. If fill is to be brought on to the site, please specify what tests will be conducted on the fill by whom at what rate and what standards will be used to assess the acceptability of the fill.	Imported material for the project is limited to bedding sand and aggregate base rock. Testing will not be performed on the bedding and base rock material. The text has been clarified to show that imported soil or soil from a borrow source will not be used at the project.
2	(1)	Specific Comment No. 4	The original comment asked for resolution to a discrepancy between the specifications and drawings regarding trench widths. The response resolved the discrepancy by removing any requirements on trench widths from both the specifications and drawings. This results in a 90 percent design document for two miles of trenches which does not include any widths or depths for the trenches. Please revise the design document to include a detail design for each segment of trench including specifications for bedding, backfill, spacing of pipe and conduit, warning tape depth et cetera.	The trench design has been finalized and the details have been incorporated into the Draft 100% Design Submittal. Details are located on Drawings C-11 and C-13 for the main header, lateral, multiphase, and IDP lines.

Document Title:
1. Draft 90% Design
2. Draft Final Construction Quality Control Plan (CQCP) – Appendix H
3. Draft Final Contingency Plan - Appendix I

Reviewer: Nicole Moutoux, Project Manager, Federal Facilities Cleanup Branch, United States Environmental Protection Agency, Region IX

Comment/ (Doc. No.)		Section, Page No.	Comment	Response
3	(1)	Specific Comment No. 5	The response indicates that Specification 02525 will be modified to contain procedures to mitigate against biofouling, but it was not revised as stated. Section 4.2.4 appears to have been modified to address this comment. Please revise Specification 02525 to address biofouling consistent with Section 4.2.4.	Specification 02525 Paragraph 3.2 has been clarified to include procedures to prevent biofouling. The procedures in Specification 02525 are now consistent with Section 4.3.4 (previously 4.2.4).
4	(1)	Comment No. 6	The response indicates that the well vaults will not be equipped with sumps. Even allowing the construction of these wells with sumps and sump pumps would not have followed the California Well Standards (see California Department of Water Resources, Bulletins 74-81 and 74-90). Please revise the design report to address how the wells will be sealed to prevent the introduction of surface water into the wells.	Water Well Standards: State of California, Bulleting 74-81, Chapter II, Section 9 indicates that the space between the well casing and the wall of the drilled hole (the annular space) shall be effectively sealed to protect it against contamination or pollution by entrace of surface and/or shallow, subsurface waters. Minimum depth of seal below ground surface for observation and monitoring wells is 20 feet below grade. Because groundwater beneath the former El Toro MCAS is relatively deep (greater than 80 fbg), the annular seal in the groundwater extraction wells will be a minimum of 70 feet in length and will extend to bottom of the well vault. Standards contained in Bulletin 74-81 and 74-90 are recommended minimum standards for the protection of groundwater quality and were originally written for potable water supply wells and subsequently adapted for the groundwater monitoring industry. Proper well design for the environmental consulting community requires the use of these standards together with accepted industry practices. Because of the site setting in the southwest quadrant of the former MCAS El Toro property, the extraction wells will be placed in subsurface vaults. The top of each vault will be set slightly above grade so that drainage is away from the vault. The well casing cap contained within the vault will be leak-proof so that any water that may enter the vault will not enter the well casing. The bottom of the vault will be filled with drain rock to allow any water that may enter the vault to drain out of the vault. This design is consistent with accepted industry practice and will adequately prevent the introduction of surface water into the wells.

Document Title:
1. Draft 90% Design
2. Draft Final Construction Quality Control Plan (CQCP) – (Appendix H)
3. Draft Final Contingency Plan - (Appendix I)

Reviewer: Tayseer Mahmoud, Senior Hazardous Substances Engineer, Office of Military Facilities, California Department of Toxic Substances Control

Comment/ Doc. No.)		Section, Page No.	Comment	Response
General Comments				
1	(1)	General	This draft 90% design submittal does not seem to have addressed all the previous comments. For example, the check valve between Line A and Line B and procedures to prevent biofouling in Specification Section 02525 do not seem to have been incorporated. Since there are significant revisions to the previous design, e.g., Specification Section 02559 seem to be replaced by Section 15051, it will be helpful to reference the changes made in the submittal with respect to each comments, in order to facilitate the review.	Changes made with respect to these comments have been referenced to the corresponding document section/paragraph/drawing. The check valve and valve box have been included. Please see Detail 6 on Drawing M-2 and the location on C-1 and C-4. Procedures to prevent biofouling have been included in Specification 02525.
2	(1)	General	Please provide details about the four proposed new multi-level monitoring wells and the rationale for the location of each well. DTSC recommends two additional multiport wells near the upgradient hotspot currently monitored by well 24_60B2 and 24_30B1. The multi-port wells should include ports in the Principal Aquifer as well as the SGU and the stratigraphic coverage should be at least as complete as the six ports of well 18_DW135...18_OW540.	A discussion of the remedial performance monitoring is included in Section 7 of the Draft 100% Design. The details and rationale for the proposed monitoring wells are included in the text and summarized in Table 9. Following discussions with DTSC, the Navy has proposed using new well 24MW08 and existing well 18_BGMW03 to complete the stratigraphic coverage to monitor the SGU as well as the upper portion of the Principal Aquifer near the hotspots of interest. The Navy developed the performance monitoring plan with input from the U.S. EPA, DTSC, and RWQCB during a Base Realignment and Closure (BRAC) Cleanup Team (BCT) meeting on July 8, 2004, and subsequent detailed technical discussions and revisions to the plan transmitted by the Navy via emails dated September 17 and November 16, 2004. The DTSC concurred with the monitoring plan via email dated November 23, 2004. The Navy also agreed during the July 8, 2004 BCT meeting to expand on the details of the performance monitoring plan in the forthcoming draft Operation and Maintenance Plan, a primary deliverable due March 1, 2005.
3	(1)	General	More monitoring wells are recommended to evaluate the remediation at the southwest corner of the base, since the plume has migrated outside the boundaries of MACS El Toro.	The recommended wells have been added and are shown on Figure 6. In addition to existing monitoring wells at the southwest corner of the base, five new monitoring wells (24MW13 to 24MW17) have been proposed in the area of interest (three on-station and two off-station). A discussion of the remedial performance monitoring is included in Section 7 of the Draft 100% Design. See the response to General Comment 2.

Document Title: 1. Draft 90% Design
2. Draft Final Construction Quality Control Plan (CQCP) – (Appendix H)
3. Draft Final Contingency Plan - (Appendix I)

Reviewer: Tayseer Mahmoud, Senior Hazardous Substances Engineer, Office of Military Facilities, California Department of Toxic Substances Control

Comment/ Doc. No.)		Section, Page No.	Comment	Response
Specific Comments				
1	(1)	Page 3-7, Section 3.2.1.4 last sentence	Please clarify the electrical classification for the motor starters installed inside the well vault.	The area inside the well vaults is non-hazardous and non-flammable: the motor starters are classified for general use. The text has not been changed in Section 3.2.1.4.
2	(1)	Page 3-7, Section 3.2.1.5, first paragraph	Please clarify if any leak detection system will be installed for all the double-walled pipelines.	Section 3.2.1.5, first paragraph: leak detection ports will be installed at the low points in the double-contained pipe segments. The ports will have a 1-inch riser pipe that will be used for local testing for presence of moisture. See Drawing M-4 (Appendix C) for a detail of the leak detection ports.
3	(1)	Page 3-7, Section 3.2.1.5, 7th bullet	Please clarify if any off-gas control for the air release valves along the pipeline.	Section 3.2.1.5: off-gas control of the air release valves has not been included and will not be included in the design. No changes have been made to the text.
4	(1)	Page 3-11, Section 3.2.2.2, 3rd paragraph	Reference to P&ID drawings in Appendix C is a typographical error. The correct reference is Appendix F.	The Process and Instrumentation Diagrams (Drawings P-1, P-2, and P-3) are located in Appendix C. Appendix F contains the specifications.
5	(1)	Page 3-12, Section 3.2.2.2 and Section 3.2.2.3	If any leak detection system will be used, the interlocks and SCADA system need to be expanded to describe how leak detection will be monitored.	Sections 3.2.2.2 and 3.2.2.3 have not been revised: remotely monitored leak detection system will not be used. Leak detection inspection ports will be tested locally for presence of moisture. See Drawing M-4 for a detail on the leak detection port (Appendix C).
6	(1)	Page 3-16, Section 3.2.3.4, 3rd bullet	It is not clear how visual inspection can determine if on-site excavated material is suitable for backfill. Please clarify.	Section 3.2.3.4, 6th bullet expands on the use of native soil for backfill: Soil from onsite excavation will be considered for backfill. If determined to be unusable based on staining, odor, or evidence of VOCs via PID screening, then unusable soil will be segregated and stored according to written procedures in the RAWP and SAP.
7	(1)	Page 4-6, Section 4.3.1.2	The trench details are not shown on Drawing C-11 in this 90% Design submittal yet.	The trench design has been finalized. Typical cross sections are found in Drawings C-11 and C-13.
8	(1)	Page 4-11, Section 4.5.4, 2nd bullet	Please clarify the statement of well development and purged groundwater non-hazardous, which is not consistent with the design of extracted groundwater with double-walled pipelines.	The reference to the assumption the groundwater will be non-hazardous has been removed from 4.6.4 (formerly 4.5.4). Section 4.6.4 (Paragraphs 2 and 3) and Section 4.6.4.1 provide details on analysis, waste characterization, and disposal of well development and purged groundwater. Well development and purged groundwater will be stored in 20,000 gallon temporary storage tanks and subsequently sampled and analyzed. After analysis has been completed, the water will be characterized for

Document Title: 1. Draft 90% Design
2. Draft Final Construction Quality Control Plan (CQCP) – (Appendix H)
3. Draft Final Contingency Plan - (Appendix I)

Reviewer: Tayseer Mahmoud, Senior Hazardous Substances Engineer, Office of Military Facilities, California Department of Toxic Substances Control

Comment/ Doc. No.)		Section, Page No.	Comment	Response
				proper disposal methods. Disposal may include on-site treatment (liquid-phase granulated activated carbon for removal of VOCs and polishing with resin for removal of perchlorates) with discharge to ground for percolation under the RWQCB, Santa Ana Region, Waste Discharge Requirement (WDR) Order No. R8-2003-0033 adopted on May 30, 2002; and amendments to this order (WDR Order No. R8-2003-0085).
9	(1)	Page 4-12, Section 4.5.4.1	Please clarify how the aboveground storage tanks will be stored and handled when daily decontamination water will be transported into the tank. This information is not discussed in the Specification Section 02120.	Section 4.6.4.1 provides details on storage of water. During well development, a 5,000 gallon storage tank will be positioned next to the well for storage of well development water. Water from the 5,000 gallon storage tank will be transferred via tanker truck to the 20,000 gallon tanks for subsequent sampling, analysis, characterization, and disposal.
10	(1)	Page 5-8, Section 5.2.2, Item 2	Please clarify the control of the transfer pumps. Based on the P&ID (Drawing P-2), the VFD of the transfer pumps seem to be controlled by the set discharge flow rate only instead of the tank levels, the extraction flow rates, or discharge pressure required by the IDP. Please clarify.	The P&ID (Drawing P-2) has been revised as recommended to control the VFD of the transfer pump by the tank water level. The transfer pump will not be controlled by the set discharge flow rate.
11	(1)	Page 5-9, Section 5.2.2, Item 4	During by-pass mode operation, it is not clear how VFD of the transfer pump will be controlled by the set discharge flow rate, as shown on P&ID (Drawing P-2), as an in-line booster pump to match the flow rates from the well field without using the equalization tank as a buffer tank. Although backpressure or suction would be applied by set discharge flow rate from the VFD of the transfer pump to affect the extraction well pump operation, however, the effects to the extraction well pump should be minimized, especially those effects will not be evenly distributed throughout the extraction system, so that the extraction objectives, i.e. mass removal and plume control, will be maintained and achieved.	Section 5.1.2 (on page 5-4) has been clarified to indicate that the VFD will be used to adjust the speed of the impeller based on the water level in the tank.
12	(1)	Page 6-2, 2nd paragraph	Please clarify if Tedlar bags or Summa® canisters will be used for TO-14 sample collection	Tedlar bags have been specified in the text.
13	(1)	Appendix C, Drawing C-4	No check valve between the Line A and Line B is shown.	Drawings C-1 and C-4 show the location of the check valve. Drawing M-2 provides a detail for installation.
14	(1)	Appendix C, Drawing C-11	No secondary containment is shown for the transfer pumps and the associated aboveground piping. (This comment also applies to Drawing S-I.)	Drawing C-11: secondary containment is provided for the double-contained equalization tanks. Secondary containment will not be provided for the pumps or above grade pipe.
15	(1)	Appendix C, Drawing	A connection detail to the 18"-CIP IDP main pipeline may be	Appendix C, Drawing C-11: based on coordination and

Document Title: 1. Draft 90% Design
2. Draft Final Construction Quality Control Plan (CQCP) – (Appendix H)
3. Draft Final Contingency Plan - (Appendix I)

Reviewer: Tayseer Mahmoud, Senior Hazardous Substances Engineer, Office of Military Facilities, California Department of Toxic Substances Control

Comment/ Doc. No.)		Section, Page No.	Comment	Response
		C-11	required.	discussions with IRWD, IRWD will perform their own connection to the discharge line. The Navy, in coordination with IRWD, is installing a 6-inch HDPE below-grade pipe and communication cable from the SGU compound discharge to the MCAS property line adjacent to IRWD's Point of Connection to their treatment compound. The Navy will provide a stub-up with blind flange at the property line. See C-13 for a detail on the stubup.
16	(1)	Appendix C, Drawing M-1	The flow meter inside the well vault has to be installed with sufficient straight length of pipeline both upstream and downstream for proper flow measurement.	Drawing M-1: sufficient straight runs of pipe have been incorporated into the design as specified by the manufacturer of the magnetic flow meter.
17	(1)	Appendix C, Drawing P-2:	The discharge line from T-300 is missing, along with valve V-304 which is mentioned on Page 9, Section 5.2.2.	Drawing P-2: the drawing has been updated to coordinate with the text. The discharge line is now shown on P-2. The three-way valve has been removed from the design and the text.
18	(1)	Appendix E, Equation 8	Equation 8 is missing which is mentioned in the text on Page E1-2.	Appendix E has been updated with calculations for the Grundfos S Series pumps.
19	(1)	Section 6.5	Section 6.5 System Optimization, Mass Removal Enhancement and Rebound Evaluation and Section 6.3 Aquifer Restoration Monitoring: The text talks about potential rebound due to contaminants in fine-grain unit (Section 6.2) and rebound evaluation (Section 6.5). The aquifer restoration monitoring (Section 6.3) and associated decision tree chart (Figure 6-3) need to reflect potential rebound monitoring (for both monitoring wells and extraction wells) as suggested.	A discussion of the remedial performance monitoring is included in Section 7 of the Draft 100% Design. In response to similar recommendations from U.S. EPA, DTSC, and RWQCB, Figure 9 (formerly Figure 6-3) has been revised and new Figure 8 has been added to address potential rebound monitoring consistent with the U.S. EPA guidance manual "Methods for Monitoring Pump-and-Treat Performance," EPA/600/R-94/123, June 1994. The proposed approach to appraise compliance with the remedial action objectives recognizes the various stages of effectiveness and attainment evaluation, including short-term and long-term treatment effectiveness, post-termination monitoring, and monitoring for long-term attainment. The forthcoming draft Operation and Maintenance Plan will expand on the details of the performance monitoring plan, including potential rebound monitoring.
20	(1)		The documents should include a discussion of the capture zones of the wells. It should also illustrate that the plume will be captured by means of one or more attached figures showing the capture zones or particle paths. These figures should be available from reports detailing the groundwater model findings, submitted last year. The figures should include capture in both plan view and cross section.	The predicted (modeled) groundwater flow pathlines and elevations resulting from extraction from the SGU and Principal Aquifer extraction wells have been overlaid on Figures 6 and 7 to demonstrate that the proposed monitoring wells (new as well as existing) can evaluate hydraulic capture as well as water quality. Based on an analysis of the pathlines and elevations, several on-station wells were added for SGU monitoring (Table 9 and

Document Title: 1. Draft 90% Design
2. Draft Final Construction Quality Control Plan (CQCP) – (Appendix H)
3. Draft Final Contingency Plan - (Appendix I)

Reviewer: Tayseer Mahmoud, Senior Hazardous Substances Engineer, Office of Military Facilities, California Department of Toxic Substances Control

Comment/ Doc. No.)		Section, Page No.	Comment	Response
				Figure 6), and five existing principal aquifer wells (IDP-4, 18_BGMP06, 18_BGMW19, 18_MCAS04, and 18_MCAS10) were added to the monitoring network to augment the modeling capture-zone analysis with additional water level and water quality information in the Principal Aquifer (Figure 7).
21	(1)	Paragraph 1.7.3	Nature and Extent of Contamination page 1-9 last paragraph: The text states' . . . but the deeper groundwater or principal aquifer is not affected beneath IRP Site 24.' The statement should be deleted unless Navy provides vertical data to support this conclusion.	The Phase I RI and Phase II RI established that VOC contamination in the Site 24 area was limited to the SGU, within the upper 100 feet of groundwater, and is impeded by the low permeability silts and clays comprising the intermediate zone (Jacobs, 1996a,b; BNI, 1997b). At Site 24, the intermediate zone is present at depths ranging from approximately 100 feet to 150 feet below first encountered groundwater. Subsequent groundwater sampling in accordance with the CERCLA Groundwater Monitoring Plan (BNI, 1999) has demonstrated that the on-station VOC plume is limited to the SGU (CDM, 2003), as memorialized in the OU1 and OU2A Record of Decision (DON, 2002) and further supported by recent supplemental sampling in support of the SGU remedy design (Earth Tech, 2004).
22	(1)	Paragraph 3.2.2.4	Electrical Primary Power. DTSC recommends that the Navy evaluate the economic costs and benefits of on-site electrical generation by renewable energy means, such as grid-connected photovoltaic array.	The Navy has evaluated resources for obtaining power efficiently. Primary power will be supplied from an existing on-base Southern California Edison source.

Document Title:
1. Draft 90% Design
2. Draft Final Construction Quality Control Plan (CQCP) – (Appendix H)
3. Draft Final Contingency Plan - (Appendix I)

Reviewer: John Broderick, California Regional Water Quality Control Board

Comment / (Doc. No.)		Section, Page No.	Comment	Response
General Comments				
1			We presented verbal comments at the July 8, 2004 BRAC Cleanup Team meeting that focused on Site 24/18 remedial design and monitoring. We have no further comments on this document.	The key items discussed and the locations where the items are incorporated into the documents are listed below: 1. A detail for cleanouts is referenced on C-1; the Notes on C-1 call for cleanouts on all lateral lines. Detail 1 on M-1, Section B on M-1, and P-2 show the requirements for cleanouts. Cleanout construction details are shown on Drawing M-4. 2. A discussion of the remedial performance monitoring is included in Section 7 of the Draft 100% Design. The Navy developed the performance monitoring plan with input from the U.S. EPA, DTSC, and RWQCB during a BCT meeting on July 8, 2004. The Navy also agreed during the July 8, 2004 BCT meeting to expand on the details of the performance monitoring plan in the forthcoming draft Operation and Maintenance Plan, a primary deliverable due March 1, 2005.

Final

APPENDIX H
Construction Quality Control Plan
Shallow Groundwater Unit Remedial Action
Installation Restoration Program Site 24
Volatile Organic Compounds Source Area

FORMER MARINE CORPS AIR STATION
EL TORO, CALIFORNIA

December 2004

Prepared for:
Base Realignment and Closure
Naval Facilities Engineering Command
San Diego, California

Prepared by:
Weston Solutions, Inc.
1575 Treat Blvd, Suite 212
Walnut Creek, California

Prepared under:
Environmental Multiple Award
Contract Number N68711-01-D-6010
Contract Task Order 0004

TABLE OF CONTENTS

1. **INTRODUCTION** **1-1**
   - 1.1 WESTON'S QUALITY POLICY 1-1
   - 1.2 PURPOSE OF THE CONSTRUCTION QUALITY CONTROL PLAN 1-2

2. **PROJECT DESCRIPTION** **2-1**
   - 2.1 SITE HISTORY, BACKGROUND, AND SUSPECTED CONTAMINANTS 2-1
     - 2.1.1 Site Location and Background 2-1
   - 2.2 REMEDIAL ACTION OBJECTIVES 2-3

3. **QUALITY CONTROL ORGANIZATION** **3-1**
   - 3.1 NAVAL FACILITIES ENGINEERING COMMAND SW SAN DIEGO TEAM 3-2
   - 3.2 BASE CLOSURE TEAM 3-2
   - 3.3 REMEDIAL DESIGN AND OVERSIGHT CONTRACTOR 3-2
   - 3.4 REMEDIAL DESIGN/REMEDIAL ACTION CONTRACTOR 3-3
   - 3.5 MEETINGS 3-4
     - 3.5.1 Kick-off Meeting/Formal Site Visit 3-4
     - 3.5.2 Progress Team Meetings 3-5
     - 3.5.3 Other Meetings 3-5
     - 3.5.4 Readiness Review 3-6

4. **RESPONSIBILITIES OF PROJECT PERSONNEL** **4-1**
   - 4.1 PROJECT MANAGER 4-1
   - 4.2 PROJECT QUALITY CONTROL MANAGER 4-2
   - 4.3 PROJECT QUALITY CONTROL ENGINEER 4-2
   - 4.4 CHEMICAL QUALITY CONTROL MANAGER 4-3
   - 4.5 THE SITE SUPERINTENDENT 4-3
   - 4.6 ADDITIONAL QUALITY CONTROL PERSONNEL 4-3
   - 4.7 PROGRAM HEALTH AND SAFETY MANAGER 4-4
   - 4.8 SITE HEALTH AND SAFETY OFFICER 4-4
   - 4.9 CERTIFICATIONS AND REGISTRATIONS 4-5

5. **DELEGATION OF QUALITY CONTROL AUTHORITY** **5-1**

6. **DEFINABLE FEATURES OF WORK** **6-1**

7. **PROCEDURES FOR SUBMITTALS** **7-1**

7.1 SCHEDULE OF SUBMITTALS 7-1

7.2 SUBMITTAL REVIEW 7-1

7.3 TRANSMITTAL FORM/CERTIFICATION 7-1

7.4 SUBMITTALS OF VENDORS AND SUBCONTRACTORS 7-2

7.5 DOCUMENT CONTROL AND FILING SYSTEM 7-2

8. **TESTING PROCEDURES** **8-1**

8.1 SUMMARY OF TESTS 8-1

8.2 TESTING FACILITIES 8-1

8.3 TESTING PROCEDURES 8-2

8.4 TEST RESULTS 8-3

9. **CONTROL PHASES AND INSPECTIONS** **9-1**

9.1 CONTROL PHASES 9-1

9.1.1 Preparatory Phase 9-1

9.1.2 Initial Phase 9-2

9.1.3 Follow-Up Phase 9-3

9.1.4 Completion Inspections 9-4

9.1.4.1 WESTON'S Punch-Out Inspection 9-4

9.1.4.2 Navy's Pre-Final Inspection 9-4

9.1.4.3 Navy's Final Acceptance Inspection 9-5

9.2 INSPECTION DOCUMENTATION 9-5

10. **DEFICIENCIES AND CORRECTIVE ACTIONS** **10-1**

10.1 DOCUMENTING DEFICIENCIES AND CORRECTIVE ACTIONS 10-1

11. **REPORTING PROCEDURES** **11-1**

11.1 DAILY PRODUCTION REPORT 11-1

11.2 DAILY QUALITY CONTROL REPORT 11-2

11.3 PREPARATORY PHASE CHECKLIST 11-4

11.4 INITIAL PHASE CHECKLIST 11-5

11.5 QUALITY CONTROL BINDERS ON-SITE 11-6

11.6 TESTING PLAN AND LOG 11-6

11.7 REWORK ITEMS LIST 11-6

11.8 AS-BUILT DRAWINGS 11-7

11.9 REPORT FORMS 11-7

12. NOTIFICATION OF CHANGES TO PROCEDURES 12-1

13. AUDITS 13-1

14. REFERENCES I

TABLES

Table 1-1 Quality Assurance Quality Control Operating Practices

Table 8-1 List of Proposed Testing Laboratories

LIST OF FIGURES

Figure 1 Project Location Map

Figure 2 Site Plan

Figure 3 Project Organization Chart

LIST OF APPENDICES

Attachment A Letter of Designation

Attachment B Submittal Register

Attachment C Transmittal Form

Attachment D Project Filing Index

Attachment E Forms, Logs, and Checklists

Attachment F Daily Production and Daily Quality Control Report Forms

Attachment G Project Quality Control/Quality Assurance Audit Checklist

ABBREVIATIONS AND ACRONYMS

ANSI	American National Standards Institute
ASQC	American Society for Quality Control
ASTM	American Society for Testing and Materials
BCT	BRAC Cleanup Team
BEC	BRAC Environmental Coordinator
BRAC	Base Realignment and Closure
CERCLA	Comprehensive Environmental Response, Compensation, and Liability Act
CFR	Code of Federal Regulations
CO	Contracting Officer
CQCP	Construction Quality Control Plan
CRWQCB	California Regional Water Quality Control Board
CTO	contract task order
DHS	Department of Health Services
DCN	Document Control Number
DON	Department of the Navy
DFW	definable feature of work
DTSC	Department of Toxic Substances Control
EMAC	Environmental Multiple Award Contract
EPA	Environmental Protection Agency
ECLs	evaluation concentration levels
FFA	Federal Facilities Agreement
FS	feasibility study
IDP	Irvine Desalter Project
IRP	Installation Restoration Program
IRWD	Irvine Ranch Water District
ISO	International Organization for Standardization
MCAS	former Marine Corps Air Station
MCLs	maximum contaminant levels
NFECSW SDIEGO	Naval Facilities Engineering Command, Southwest Division, San Diego
OCWD	Orange County Water District
OSHA	Occupational Safety and Health Administration
PM	Project Manager
QA	quality assurance

ABBREVIATIONS AND ACRONYMS

QAO	Quality Assurance Officer
QAPP	Quality Assurance Project Plan
QC	quality control
RFI	Request for Information
RI	remedial investigation
ROD	Record of Decision
ROICC	Regional Officer in Charge of Construction
RPM	Remedial Project Manager
RWQCB	Regional Water Quality Control Board
SGU	shallow groundwater unit
SOW	Statement of Work
SHSO	Site Health and Safety Officer
SHSP	Site Health and Safety Plan
SVE	soil vapor extraction
TCE	trichloroethylene
USEPA	United States Environmental Protection Agency
VOC	Volatile Organic Compound

1. INTRODUCTION

Weston Solutions, Inc., (WESTON) is responsible for the quality control of construction activities conducted by WESTON and its subcontractors. The WESTON quality management system consists of plans, procedures, and the organization necessary to produce an end product that complies with governing regulations and the contract requirements. The WESTON *Corporate Quality Management Plan* (WESTON, 2002a) describes the basic program applied to all WESTON projects and it is based on the American National Standards Institute (ANSI)/American Society for Quality Control (ASQC) Standard ANSI/ASQC E4-1994 entitled "*Specifications and Guidelines for Quality Systems for Environmental Data Collection and Environmental Technology Programs* (ANSI/ASQC, 1994). The elements of WESTON's construction quality management system are described in the *Corporate Quality Management Plan* and are applicable to all construction activities conducted by WESTON and its subcontractors.

This Construction Quality Control Plan (CQCP) for the Installation Restoration Program (IRP) Site 24, located at the former Marine Corps Air Station in El Toro, California, is based on the policies and procedures defined in the WESTON's *Corporate Quality Management Plan*. The CQCP describes specific quality control (QC) activities that will be implemented during remediation work at IRP Site 24. Figure 1 is a location map of Site 24 at Former Marine Corps Air Station (MCAS) El Toro.

1.1 WESTON'S QUALITY POLICY

WESTON is committed to quality as embodied in and communicated through our *Quality Policy Statement (PD 10-01)*. It is the policy of WESTON to adhere to the following principles:

- Understand and meet the client's requirements while exceeding expectations.
- Provide services and deliverables that are technically sound and responsive.
- Maintain a focus on continuous improvement.

1.2 PURPOSE OF THE CONSTRUCTION QUALITY CONTROL PLAN

The purpose of this CQCP is to outline the QC measures to be implemented for remedial actions at IRP Site 24, Volatile Organic Compounds (VOCs) Source Area, at the former MCAS, El Toro, California. The remedial action to be implemented at IRP Site 24 is consistent with the selected remedy documented in the *Final Record of Decision (ROD) Operable Unit 1, Site 18—Regional Volatile Organic Compound Groundwater Plume, Operable Unit 2A, Site 24—VOC Source Area, Former Marine Corps Air Station, El Toro, California* (DON, 2002). This CQCP was prepared for the Naval Facilities Engineering Command, Southwest Division (NFECSW SDIEGO), under contract task order (CTO) No. 0004 of the Environmental Multiple Award Contract (EMAC) No. N68711-01-D-6010.

The CQCP provides the mechanism to ensure that remediation project activities affecting quality are recorded within a document control system and are accomplished in accordance with contract specifications, drawings, and procedures. The CQCP outlines the system for inspections, tests, and controls necessary to achieve specified quality and identifies personnel, procedures, controls, instructions, tests, records, and forms to be used. This document is subject to change based on review and the implementation of additional tasks. Unforeseeable site conditions or changes in the work scope may warrant the revision of this document or the addition of supplements to cover emergent work requirements.

The procedures specified in this CQCP comply with the quality assurance (QA) and quality control (QC) practices outlined by WESTON in a series of operating practices, summarized in Table 1-1.

Table 1-1

Quality Assurance and Quality Control Operating Practices

Weston Solutions, Inc. Document Title	Document Number	Effective Date
Quality Policy Statement	PD 10-01	02/15/00
Basic Elements of Quality Assurance	OP 10-01-001	02/15/00
Quality Assurance Plan	OP-10-01-002	02/15/00
Corporate Quality Assurance Process Description	OP 10-01-003	01/14/00
Identification, Review, and Control of Deliverable Documents, Samples, Materials, Parts, Components, and Deliverables	OP 10-01-004	02/15/00
Assessments: Audits, Surveillances, and Peer Reviews	OP 10-01-005	02/15/00
Corrective Actions	OP 10-01-006	02/15/00

2. PROJECT DESCRIPTION

This section of the CQCP addresses the history and background of the site related to the planned remedial actions at IRP Site 24, and presents the remedial action objectives.

2.1 SITE HISTORY, BACKGROUND, AND SUSPECTED CONTAMINANTS

This section describes the history and the background of the site, and the suspected contaminants of concern and their origin. Additional details are included in the Draft Final Remedial Action Work Plan (WESTON 2004) for Site 24.

2.1.1 Site Location and Background

Former MCAS El Toro is located in a semi-urban/agricultural area of southern California, approximately 8 miles south of Santa Ana and 12 miles northeast of Laguna Beach as shown in Figure 1. Former MCAS El Toro covers approximately 4,740 acres. Land use surrounding the former station includes commercial, light industrial, agricultural, and residential. Former MCAS El Toro closed on July 2, 1999, in accordance with the Base Realignment and Closure (BRAC) Act.

IRP Site 24 is located in the southwest quadrant of Former MCAS El Toro and encompasses approximately 200 acres (Figure 2). Land use at the site consists of both residential, and light and heavy industrialized areas. The site is dominated by runways in the center surrounded by aircraft maintenance and support facilities, including two large aircraft hangars (Buildings 296 and 297) that were the source of the VOC contamination.

Former MCAS El Toro was added to the National Priorities List of the Superfund Program on February 15, 1990, due to VOC contamination at the site boundary and in the agricultural wells west of the former MCAS. A Federal Facilities Agreement (FFA) was signed by the Marine Corps and the DON in October 1999 with EPA Region IX, California Department of Health

Services (DHS) (part of which is currently the DTSC), and the California Regional Water Quality Control Board, Santa Ana Region (CRWQCB).

In March 1993, the former MCAS El Toro was placed on the list of military facilities scheduled for closure under the BRAC Act. A BRAC Cleanup Team (BCT), including representatives from the NFECSW SDIEGO, EPA, DTSC, and CRWQCB, was formed to oversee implementation of the FFA. Implementation of the FFA at former MCAS El Toro included a Phase I Remedial Investigation (RI), a Phase II RI/Feasibility Study (FS), and various site-specific investigations and studies.

These investigations identified VOC contamination at the former station boundary and in the agricultural wells west of the former station. VOC contamination due to Base operations migrated from the soil to the shallow groundwater unit (SGU) and from there to the principal aquifer (agricultural wells located west of the former MCAS). The contaminated areas were divided into two regions: IRP Site 24 consists of the source area and the SGU; and IRP Site 18 consists of the principal aquifer, mainly located off-site.

IRP Site 24, VOC Source Area, comprises two contaminated media: soil and groundwater. Contaminated soil at IRP Site 24 was addressed in an Interim ROD (DON, 1997) that documented selection of soil vapor extraction as the remedy. The remedy for soil was implemented and a vadose zone closure report (Earth Tech, 2002) was submitted to the BCT. The BCT concurred with the vadose zone closure report and the FFA signatories approved the vadose zone closure report. The selected remedies for the contaminated groundwater at IRP Sites 24 and 18, Regional VOC Groundwater Plume, are extraction, treatment, and institutional controls (DON, 2002). Groundwater will be extracted from wells installed in the areas of highest reported trichloroethene (TCE) concentrations at IRP Site 24. At IRP Site 18, groundwater will be extracted from areas of the groundwater plume where TCE concentrations are equal to or greater than 5 micrograms per liter (μg/L). The extraction of contaminated groundwater will help to prevent migration of VOCs from IRP Sites 18 and 24 and will thus reduce concentrations of VOCs in groundwater at both sites to federal or state drinking water standards.

Extracted groundwater will be treated at the modified Irvine Desalter Project (IDP) facility to remove VOCs using air stripping. VOC vapors will be extracted from the air stream with activated carbon filters prior to discharge to the atmosphere. The modified IDP is a proposed water supply development project initiated by the Orange County Water District (OCWD) and the Irvine Ranch Water District (IRWD). The goal of this project is to develop a local water supply, drawing from the principal aquifer, by first, intercepting, containing, and treating groundwater with high concentrations of total dissolved solids and nitrates, and second, by accepting and treating groundwater extracted by the MCAS for VOC removal. The modified IDP is composed of two separate components, a non-potable system, and a potable system, designed to treat groundwater from two areas in the principal aquifer and one from the shallow groundwater unit.

Non-potable System—Groundwater from IRP Site 24 and areas inside the principal aquifer VOC plume, which is contaminated above drinking water standards, would be extracted, treated, and conveyed for use as recycled water. Only the VOC-related portion of the modified IDP that treats water from IRP Site 24 and other areas within the principal aquifer VOC plume would be considered part of the DON CERCLA remedy.

Potable System—Groundwater from areas outside the principal aquifer VOC plume would be extracted and treated to remove total dissolved solids and nitrates. Treated water would then be supplied for domestic purposes. This system does not fall under the jurisdiction of the DON's CERCLA remedy.

2.2 REMEDIAL ACTION OBJECTIVES

The purpose of the remedial action under CERCLA is to remove VOCs in the SGU pursuant to the ROD (DON, 2002). The following remedial action objectives were established for groundwater at IRP Site 24:

- Reduce concentrations of VOCs in the Site 24 SGU to federal or state cleanup levels
- Prevent use of groundwater containing VOCs at concentrations above cleanup levels

- Prevent VOCs at concentrations above cleanup levels from migrating beyond the SGU.

The VOC plume will be remediated using pump and treat technology, plus enhanced mass removal using soil vapor extraction (SVE) in a dewatered capillary fringe zone. Up to 39 new extraction wells will be used for the SGU pump and treat remediation, with 35 new extraction wells installed during the implementation of the remedial action and four extraction wells installed later. For mass removal in the dewatered capillary fringe zone, four existing monitoring wells will be converted to extraction wells (24EX03, 24EX4, 24EX5, and 24EX6). These converted monitoring wells will be used to lower the groundwater table in the immediate vicinity and to create the dewatered capillary fringe zone. Mass removal in this dewatered capillary fringe zone will be accomplished via SVE.

The new groundwater extraction wells will remove contaminated groundwater from the SGU at Site 24. The extraction well design and their flow rates and locations are currently based on groundwater flow and contamination plume modeling conducted by Earth Tech. Extracted groundwater will be conveyed through a pipeline for treatment to the IRWD modified IDP facility. A transfer compound, the booster station, will be installed immediately upstream of the point of connection to the modified IDP facility. The transfer compound will consist of an equalization tank, influent piping connection, transfer pumps, and associated equipment and instrumentation, all located on a fenced and gated concrete pad. The transfer compound is referred to as "the compound". The point of connection to the modified IDP will be downstream of the compound and at an existing pipeline near the base boundary.

The remedial action objectives are intended to ensure the continued beneficial use of groundwater from the principal aquifer, which is the Irvine Subbasin (DON, 2002). Groundwater from this aquifer is currently used for agriculture, but is also designated by CRWQCB as a potential source of drinking water. As such, the groundwater must meet the cleanup standards based on the federal and state Maximum Contaminant Levels (MCLs), an objective specified in the ROD (DON, 2002).

The SGU groundwater extraction system to be constructed at IRP Site 24 is designed to meet these ultimate objectives. The SGU extraction system will be operated to meet the remedial action objectives by maximizing the mass removed from the subsurface while still meeting the numerical criteria called the Evaluation Concentration Levels (ECLs) listed in the *Settlement Agreement Among the Settling Federal Agencies (SFA), Orange County Water District, and Irvine Ranch Water District in Regard to Former Marine Corps Air Station El Toro Groundwater Remediation*, signed in 2001 (SFA at el, 2001). The ECLs constitute the IRWD modified IDP acceptance criteria. If a concentration of a chemical of concern exceeds the corresponding ECL, then the NFECSW SDIEGO Remedial Project Manager (RPM) and other parties identified by the RPM, such as USEPA, DTSC, DHS, CRWQCB and OCWD/IRWD, will be notified in writing.

3. QUALITY CONTROL ORGANIZATION

A central element for controlling quality is to establish a QC organization that is independent of those persons actually performing the work. The organization is responsible for the implementation of the procedures outlined in the CQCP, specifically, for observing, measuring, recording, and documenting the work performed and for controlling the quality by providing timely feedback to those persons actually performing the work. Feedback, in the form of documented inspections, tests, or other evaluations, is necessary in order to provide approval or disapproval of an activity based on pre-selected standards. Work that is disapproved must be corrected, redone, or reworked before subsequent work can be implemented.

The primary functions of the QC organization are to ensure that work is completed within the project requirements, without deficiency, and to the satisfaction of the client. To that extent, the focus of the QC organization is to ensure that staff with the adequate and appropriate qualifications and training, as well as the appropriate procedures, are in place from the inception of the project through its completion.

The QC personnel will implement a three-phase control system for each definable feature of work (DFW) performed (i.e., preparatory, initial, and follow-up phases). A fourth and final (i.e., completion) phase with inspections will also be conducted. Safety is equal in importance and is given equal emphasis with quality and production for each phase of every construction activity.

The duties, responsibilities, and authorities for each person assigned a quality management function are provided in Section 4 of this plan.

The project organization includes representatives from the NFECSW SDIEGO, BCT, the remedial design contractor (Earth Tech) and WESTON. The responsibilities of key personnel within these organizations are discussed below. The remedial design contractor, Earth Tech, will provide general construction oversight. The NFECSW SDIEGO will provide QA oversight. Figure 3 shows the project organization chart as related to QC responsibilities.

3.1 NAVAL FACILITIES ENGINEERING COMMAND SW SAN DIEGO TEAM

The positions and responsibilities of NFECSW SDIEGO project management are as follows:

- **Contracting Officer (CO)**—Responsible for the negotiation and execution of the construction contract. The CO is responsible for providing technical direction to WESTON.
- **Remedial Project Manager (RPM)**—Provides governmental oversight of technical issues for the project. Interfaces with the BCT, community representatives, and the contractor to meet project objectives.
- **Resident Officer in Charge of Construction (ROICC LA)**—Coordinates all work that takes place at MCAS El Toro. Specific tasks include approving vendor submittals, verifying personnel qualifications, conducting constructability reviews, and overseeing construction.
- **Quality Assurance Officer (QAO)**—Responsible for government oversight of the Quality Assurance (QA) program and provides quality-related direction for the project. Has authority to suspend project activities if the contract quality requirements are not met.

3.2 BASE CLOSURE TEAM

The positions and responsibilities of key BCT personnel are as follows:

- **BRAC Environmental Coordinator (BEC)**—The BEC is the NFECSW SDIEGO representative who chairs the BCT and is responsible for coordinating environmental restoration and compliance programs and updating the BRAC Cleanup Plan at MCAS El Toro.
- **U.S. EPA RPM, DTSC RPM, and CRWQCB RPM**—These agency RPMs are responsible for overseeing and monitoring the progress of remedial design and remedial action, and conformance of these activities with the requirements of the FFA and ROD.

3.3 REMEDIAL DESIGN AND OVERSIGHT CONTRACTOR

The remedial design and oversight contractor is contracted by NFECSW SDIEGO to prepare the 60 percent design package; to oversee preparation of the 90 percent design submittal and the 100 percent design submittal; and to provide oversight during the construction phase. Earth Tech, Inc.

is the remedial design/oversight contractor for the project. The position and responsibilities of key remedial design/oversight contractor are as follows:

- **Program Manager**—The program manager is responsible for all aspects of the CLEAN II program.
- **Program Quality Manager**—The program quality manager is responsible for developing the QA process and supervising audits within the CLEAN II program for compliance with program and project specific procedures and specifications.
- **Health and Safety Manager**—The health and safety manager is responsible for supporting NFECSW SDIEGO in the review and oversight of the program health and safety.
- **Project Manager**—The project manager has overall responsibility for work performed for the remedial design and in duties related to oversight support.
- **Project QA Engineer**—The project QA engineer has final responsibility for QA activities within the project. The project manager and QA engineer may be the same person, providing that the person is a registered Professional Engineer in the State of California. The QA engineer is responsible for activities stated for the QA staff, daily direction of the QA staff, and testing laboratories.

3.4 REMEDIAL DESIGN/REMEDIAL ACTION CONTRACTOR

WESTON is the Remedial Design/Remedial Action Contractor. WESTON is responsible for preparing the 90 percent and 100 percent design submittal packages and for implementing the remedial design. The authorities and responsibilities of key remedial action team members are summarized below as follows:

- **Program Manager**—The program manager is responsible for all aspects of the EMAC remedial action program.
- **Program QC Manager**—The Program QC manager is responsible for developing the QC process and supervising audits of projects within the remedial action program for compliance with program and project-specific procedures and specifications.
- **Project Manager**—The Project Manager is responsible for day-to-day management of project budgets, staffing, scheduling, execution of tasks and subcontracts, and deliverables.

- **Project QC Manager**—The Project QC Manager will be a registered professional engineer in the State of California, and will review and stamp the 100% Design Submittal.

- **Project QC Engineer**—The Project QC Engineer is responsible for ensuring that subcontractors and vendors comply with project requirements and contractual obligations for QC and that all field activities are performed as required by the project design and meet the contract requirements.

- **Program Health and Safety Manager**—The Health and Safety Manager is responsible for developing and approving the Site Health and Safety Plan (SHSP), ensuring compliance with state and federal regulations, and conducting periodic audits to ensure program compliance.

- **Site Health and Safety Officer (SHSO)**—The Site Health and Safety Officer is responsible for establishing and maintaining communications with all site personnel concerning the SHSP, verifying adherence to site safety requirements, organizing and conducting safety meetings (tailgate meetings), and recording and documenting safety incidents on site.

- **Site Superintendent**—The Site Superintendent is responsible for day-to-day supervision of staff and coordination of tasks for project completion. This includes review of engineering design documents, planning and oversight of field activities, and QC.

- **Contracts Manager**—The Contracts Manager is responsible for soliciting, selecting, and managing of subcontracts for remedial action construction services and materials required for the project.

3.5 MEETINGS

3.5.1 Kick-off Meeting/Formal Site Visit

Following the contract award, WESTON's Project Manager, the Site Superintendent, and the SHSO attended a kick-off meeting/formal site visit with the NFECSW SDIEGO and design contractor. The meeting enabled WESTON personnel to introduce themselves to the NFECSW SDIEGO representatives and to engage in a discussion on the access of site locations, scheduling,

and other issues related to the execution of the CTO. WESTON recorded the meeting minutes and submitted a copy to NFECSW SDIEGO within 10 calendar days.

3.5.2 Progress Team Meetings

In the course of project execution, WESTON will attend project team meetings at MCAS El Toro with NFECSW SDIEGO personnel, regulators, IRWD, and other contractors to coordinate and schedule all work.

At these meetings, the look-ahead schedule will provide anticipated activities for review and planning. The meetings will enable WESTON and NFECSW SDIEGO to work together as partners and discuss issues regarding work in progress or work planned. The meetings will include discussions of draft and final deliverables. WESTON's Project Manager, Design Leader, Site Superintendent and other project staff as necessary will attend these meetings.

WESTON will prepare the meeting agenda and distribute copies to all participants 48 hours in advance. WESTON will take the meeting minutes and submit a copy to NFECSW SDIEGO within 10 calendar days.

3.5.3 Other Meetings

As required by the CQCP, WESTON's Project Manager and Design Leader will attend a minimum of two Design Resolution Meetings. Prior to start of construction, WESTON's Project Manager, Design Leader/Project QC Engineer, and Site Superintendent will attend a Preconstruction Meeting.

During construction, weekly progress meetings will be held on site between WESTON and NFECSW SDIEGO. WESTON's attendees will, at a minimum, include the Site Superintendent, Project QC Manager, and SHSO. In these meetings, WESTON will provide updates on the construction progress using as-built site drawings, and discuss the Request for Information (RFI) status and schedule updates. During design and O&M phases, progress meetings will be held on a monthly or bimonthly basis.

WESTON will prepare the agendas for the progress meetings and distribute them to all parties 48 hours in advance. Meeting minutes will be provided to NFECSW SDIEGO within 10 calendar days.

3.5.4 Readiness Review

The RPM, the ROICC LA, and WESTON will conduct readiness reviews prior to start of any definable feature of work (DFW) to ensure the following:

- All applicable permits have been obtained and notifications completed
- Adequately trained individuals will perform the work
- Appropriate plans and procedures are in place
- Adequate, calibrated equipment is available
- All other requirements for satisfactory performance have been met.

4. RESPONSIBILITIES OF PROJECT PERSONNEL

The title, responsibilities, and authorities of WESTON personnel assigned a project quality control function are described in the following subsections. Figure 3 identifies personnel currently assigned to these positions. The qualifications of the quality management personnel are outlined in the *Corporate Quality Management Plan*. If the qualifications, responsibilities, and authorities change due to the change in personnel assignment, the CQCP will be updated accordingly.

4.1 PROJECT MANAGER

The Project Manager (PM) is the single point of contact for the project. The PM is responsible for the management and execution of activities according to the approved statement of work (SOW), approved work plans, and federal, state, and local laws and regulations. This includes coordinating the activities of the groups, subcontractors, or teams working on the project.

The PM's specific responsibilities will include the following:

- Completing the construction activities in accordance with the contract specifications and drawings and approved planning documents.
- Ensuring that the work is conducted in a safe and environmentally sound manner (this includes ensuring coordination between the Program Health and Safety Manager and the SHSO).
- Maintaining close communication and coordination with the client for the duration of the project.
- Preparing the required reports and submitting them to the client in a timely manner.
- Immediately notifying the client of problems with construction or safety and health procedures.
- Ensuring that site personnel follow the approved procedures presented in the site-specific project plans or in the CQCP.

The PM has the authority to stop work on any part of the job if it is found to be noncompliant with contract specifications or project plans. Further, the PM is authorized to institute corrective actions, as necessary, and to implement these changes, with client approval, in accordance with

the provisions of the contract. The groups, subcontractors, and teams working on the project report to the PM and act at his direction.

4.2 PROJECT QUALITY CONTROL MANAGER

The Project QC Manager is responsible for independently confirming the project quality implementation. Confirmation includes inspecting and stamping the design documents, and reviewing the work documentation to assess how effectively the CQCP is being implemented.

The Project QC Manager has the authority to stop work if it is found to be noncompliant with contract specifications or project plans. He also has the authority to recommend corrective actions to the PM and to require that a schedule for corrective action implementation be established.

4.3 PROJECT QUALITY CONTROL ENGINEER

The Project QC Engineer reports to the Project QC Manager regarding quality issues. The Project QC Engineer may delegate specific quality control responsibilities to the Site Superintendent or to another qualified person with prior approval from the Project QC Manager and the PM.

The Project QC Engineer has quality management as a principal duty, but may be assigned other duties when the level of quality management activities does not warrant full-time dedicated service and the other assigned duties do not conflict with the quality management duties. The Project QC Engineer is the single point of contact responsible for ensuring compliance with the requirements identified in the contract and the CQCP. The Project QC Engineer or designated alternate is responsible for the preparation of Daily Quality Control Reports and for overall quality management related to the construction work.

The Project QC Engineer has the authority and responsibility to stop specific work activities related to or affected by noncompliant conditions until actions can be taken to correct the noncompliant condition or prevent it from affecting related or subsequent work, and has the

authority to act for WESTON in quality matters related to construction and remediation activities. The Project QC Engineer, or designated alternate, will be physically present at the site as appropriate when construction activities are in progress and will oversee quality management functions.

4.4 CHEMICAL QUALITY CONTROL MANAGER

The Chemical QC Manager reviews and approves all plans and technical documents and oversees the quality of environment data collection; conducts field and laboratory audits; implements chemical QA/QC as required in the Quality Assurance Project Plan (QAPP); reviews laboratory data before use; coordinates laboratories and data validation companies; and reviews data validation reports. The Chemical QC Manager has the authority and responsibility to stop specific work activities related to or affected by noncompliant conditions until actions can be taken to correct the noncompliant condition or prevent it from affecting related or subsequent work.

4.5 THE SITE SUPERINTENDENT

The Site Superintendent reports to the PM and is responsible for supervising the implementation of all field activities. He provides direct supervision of field staff and together with the Project QC Engineer is responsible for ensuring that all personnel adhere to the requirements of the CQCP. Subcontractors will also report to the Site Superintendent and act at his direction. The Site Superintendent has the authority to stop work if it is found to be noncompliant with contract specifications or project plans. The Site Superintendent will prepare the Daily Production Reports.

4.6 ADDITIONAL QUALITY CONTROL PERSONNEL

Additional QC personnel may be assigned to assist the Project QC Engineer in conducting on-site and off-site inspections and tests. The person performing the inspection or test will be qualified to do so through training or experience. The QC personnel report to the Project QC

Engineer and will be assigned based on background, experience, and availability. The QC personnel (including specialized personnel such as hydrogeologists) will be at the site of work during those times when work activities in their designated areas are occurring, with complete authority to stop work and resolve the actions necessary to ensure compliance with the contract.

4.7 PROGRAM HEALTH AND SAFETY MANAGER

The Program Health and Safety Manager, a Certified Industrial Hygienist, will provide overall direction to the development, implementation, and oversight of safety and health-related aspects of the project. His responsibilities will include reviewing and approving the Site Health and Safety Plan (SHSP) and providing additional safety and health direction and auditing as needed to ensure that the project meets contract requirements and provisions of 29 Code of Federal Regulations (CFR) Occupational Safety and Health Administration (OSHA) 1910 (General Industry Standards) and OSHA 1926 (Construction Standards), in particular 1910.120/1926.65, Hazardous Waste Site Work and Emergency Response Standards.

The Program Health and Safety Manager has the authority to stop work for any safety and health-related issues. He also has the authority, with notification to the PM, to modify safety protocols and authorize revisions of the SHSP.

4.8 SITE HEALTH AND SAFETY OFFICER

The responsibilities and authorities of the Site Health and Safety Officer (SHSO) are the same as those of the Program Health and Safety Manager. The SHSO is responsible for the following tasks:

- Evaluate each feature of work for safety and health risks.
- Ensure that periodic safety audits are conducted.
- Interpret air monitoring/air sampling data required to determine appropriate upgrade/downgrade personal protective measures.
- Ensure compliance with specified safety and health requirements, federal, state, and OSHA regulations, and pertinent aspects of the SHSP.
- Consult with and coordinate any modifications to the SHSP with the Program Health and Safety Manager and the client.

- Conduct accident investigations and prepare accident reports.
- Review results of daily QC inspections and document safety and health findings in the Daily Production and QC Report or logbook as appropriate.
- Recommend corrective actions in coordination with site management and the Program Health and Safety Manager for identified deficiencies and oversee the corrective actions.

The SHSO is authorized to stop work if unacceptable safety and health conditions exist and to take appropriate measures to reestablish and maintain safe working conditions. The SHSO may not change the SHSP or protocols without the approval of the Program Health and Safety Manager and acceptance by the client, if appropriate.

4.9 CERTIFICATIONS AND REGISTRATIONS

As applicable, personnel assigned to perform, review, approve, and/or certify the design of architectural, structural, mechanical, electrical, civil, or other engineering features of the work will be registered to practice in their particular professional field in the state within which the project being designed is located.

5. DELEGATION OF QUALITY CONTROL AUTHORITY

WESTONs Director of Corporate Environmental Health and Safety and Quality Assurance delegates QC authority to the Chemical QC Manager, Project QC Manager, and Project QC Engineer through a "letter of designation." The letter also delegates QC authority to the Site Superintendent as a QC designee of the Project QC Engineer. The letter of designation provides a description of responsibilities, delegates the authority to stop work that is not in compliance with the contract, and establishes an independent reporting structure for QC personnel.

As necessary, the Project QC Manager may issue additional letters of designation to other various QC representatives, outlining duties, authorities, and responsibilities. The "letter of designation" for this CQCP is provided in Attachment A.

6. DEFINABLE FEATURES OF WORK

For this project, a list of the DFW identified by trade and/or discipline has been projected as follows:

- Mobilization of personnel and equipment/set up temporary facilities
- Site preparation
- Well construction
- Well development
- Vault installation and wellhead and manifold construction
- Trenching and shoring
- Pipe bedding and pipe installation
- Extraction well pump installation
- Backfilling and compaction
- Form work, rebar, and concrete work for pad installation
- Equalization tank and appurtenances installation
- Electrical connection
- Startup, shakedown, and optimization
- Sampling and analysis
- Post-construction survey
- Demobilization of personnel and equipment
- Site restoration

WESTON will implement an inspection procedure for the Three Phases of Control system for each DFW performed (i.e., preparatory, initial, and follow-up phases) as discussed in Section 9 of this CQC Plan. Attachment G includes examples of preparatory, initial, and follow-up inspection forms for the DFWs listed above. Finalization of the checklists will be completed prior to the start of each DFW.

A fourth and final or "completion" inspection will also be conducted. Safety is equal in importance and is given equal emphasis with quality and production for each phase of every construction activity.

7. PROCEDURES FOR SUBMITTALS

WESTON is responsible for total management of construction, remediation, and engineering consulting work identified in the remediation activities at IRP Site 24, including activities conducted in the field. This responsibility includes scheduling, reviewing, certifying, and managing submittals. WESTON is also responsible for ensuring that certifications provided by others (e.g., vendors and subcontractors) are accurate and in compliance with the contract requirements. The procedures for field submittals are discussed in the following subsections.

7.1 SCHEDULE OF SUBMITTALS

A Submittal Register will be used to log and monitor required submittal activities. No construction or installation activities will be performed prior to required approvals of applicable submittals. An example of a Submittal Register is provided in Attachment B. The final Submittal Register will be completed prior to the start of field work and will be transmitted to the client.

7.2 SUBMITTAL REVIEW

WESTON will review each field submittal for contract compliance. The Project QC Engineer or designated alternate will review submittals. Submittals that comply with the contract will be forwarded to the client. Submittals that do not comply with the contract will be returned to the originator for correction.

7.3 TRANSMITTAL FORM/CERTIFICATION

The WESTON Transmittal Form, provided in Attachment C, will be used to accompany submittals of WESTON and WESTON'S vendors/subcontractors. The Transmittal Form will be checked and approved by the PM, the Project QC Engineer or their designated alternates. The form will be signed and dated, certifying that the accompanying submittal complies with contract requirements.

7.4 SUBMITTALS OF VENDORS AND SUBCONTRACTORS

For review, certification, and management of submittals from vendors and subcontractors, the procedures contained within the WESTON *Procurement Procedures Manual* (WESTON, 2002b) will be implemented. This manual contains the procurement procedures of WESTON and constitutes the WESTON procurement system. It defines the authority, responsibility, and basic requirements to be followed when procuring supplies and services, and ensures that sound business practices are adopted and implemented; fair and reasonable costs are sought and obtained; delivery requirements are met; and that user satisfaction is achieved. The PM or designee is responsible for identifying technical and schedule requirements for subcontractors and for overseeing subcontractor performance.

7.5 DOCUMENT CONTROL AND FILING SYSTEM

All project documents, such as work plans, SHSPs, field sampling plans, CQCPs, and reports will be tracked using a document control numbering (DCN) system. The Project QC Engineer will be responsible for ensuring that the PM establishes a DCN system and that a DCN log is maintained for the project.

All project documents and submittals will be filed according to a system using the project file index shown in Attachment D. The project filing index categorizes project submittals by type.

8. TESTING PROCEDURES

The requirements for testing facility qualification and testing procedure tracking are described in the following sections.

8.1 SUMMARY OF TESTS

A summary of the tests required (i.e., a testing plan and log) for each DFW will be compiled for the project based on requirements outlined in the specifications and drawings. The following information will be defined on the log:

- Applicable Specification Section and Paragraph number
- Tests required
- Name of laboratory performing the tests and if lab is approved/accredited for test methods.
- Name of individual obtaining the samples.
- Location of tests: on-site or off-site lab
- Date tests completed.
- Date results forwarded to Contracting Officer.
- Remarks: estimated number of tests.

The tests will be logged onto the form titled "Testing Plan and Log". An example of a Testing Plan and Log is located in Attachment E of this plan.

8.2 TESTING FACILITIES

Laboratories used for testing soils, concrete, and asphalt will meet the criteria detailed in American Society for Testing and Materials (ASTM) D3740 and ASTM E329. Laboratories performing environmental analytical services will comply with the requirements of International Organization for Standardization (ISO) 17025 (former ISO Guide 25), *General Requirements for the Competence of Calibration and Testing Laboratories* (ISO, 1999). Additional laboratory qualifications are addressed in the QAPP. The proposed laboratories for this project are listed in Table 8-1.

Table 8-1

List of Proposed Testing Laboratories

Laboratory Name	Testing Capabilities	Locations
Kleinfelder	Materials, soils, concrete, and geotechnical testing	16 Technology Drive #150 Irvine, CA
Severn Trent Laboratories (STL)	Certified by the State of California DHS Environmental Laboratory Accreditation Program (ELAP) and has successfully completed the NFESC laboratory assessment.	1721 South Grand Avenue Santa Ana, CA

8.3 TESTING PROCEDURES

Tests will be completed as defined for the project. The following procedures will be followed for tests, as warranted:

- Verify and document that test facilities are available.
- Determine the testing standards from the specifications, Sampling and Analysis Plan, or contract; confirm that the laboratory can comply with the standards and document the response(s).
- Verify that test equipment is available and complies with testing standards, if required. If on-site or off-site testing is conducted, identify the testing equipment required by the work plan or contract and document that it is available. Determine and document that the test equipment complies with test standards.
- Check test instrument calibration data against certified standards. Conduct and document equipment calibration.
- Verify that appropriate recording forms are available. Determine the parameters that must be recorded from the specifications, drawings, or Sampling and Analysis Plan, or contract; ensure that recording forms contain this information.
- Verify that a test identification control number system is prepared (e.g., test number assigned, sample numbers assigned, etc.). Prepare a checklist based on the Sampling and Analysis Plan, specifications, drawings, or contract for required parameters such as test number and sample numbers.

For some tests, such as those that are repeated regularly throughout the duration of the project (i.e., analytical tests for groundwater samples), the checklist may be filled out only at the

beginning of the project. Once a defined system for testing procedures is established, the checklist may no longer be required.

8.4 TEST RESULTS

A summary of tests completed each day will be documented on the Daily Production Report and Daily Quality Control Report forms. The Testing Plan and Logs will also be updated and kept current. Examples of the Daily Production Report and Daily Quality Control Report forms are provided in Attachment F. At a minimum, test records will include the following information:

- Date
- Name of person performing the test and recording the data
- Identification of test methods and equipment used
- Results of the test
- Verification of acceptability of test results
- Actions taken to correct deficiencies.

The QC Engineer will furnish the signed reports, certifications, and a current copy of the Testing Plan and Log at the end of each month to the Contracting Officer. A copy of the current Testing Plan and Log will be attached to the last Daily Quality Control Report of each month.

Tests performed for construction materials, soil, and concrete test results will be signed by a laboratory representative authorized to sign the test reports. See the Sampling and Analysis Plan for details regarding chemical data analysis and data management requirements.

9. CONTROL PHASES AND INSPECTIONS

The QC procedures for field work are based on the three phases of quality control and inspections that consists of the following control phases:

- Preparatory Phase
- Initial Phase
- Follow-up Phase.

The checklists that will be used to document the three phases of quality control and inspections are provided Attachment E. In addition to the three phases of quality control, completion inspections will be also conducted. Each QC phase is discussed separately in the following subsections.

9.1 CONTROL PHASES

The controls for quality will include at least three phases for all definable features of work, as presented below.

9.1.1 Preparatory Phase

A Preparatory Phase Inspection will be performed prior to beginning any work on each DFW. The preparatory inspection will include the following activities:

- Schedule the Preparatory Phase meeting/inspection and notify the Contracting Officer at least 48 hours in advance of the Preparatory Phase meeting.
- Attendees: Record attendees present at the meeting.
- Submittals: Verify that submittals for materials and equipment have been submitted and approved. Verify that approved materials are on-hand (if not, document items missing). Verify approved submittals against delivered materials.
- Material Storage: Verify that materials are stored properly. If not, described the action that was taken.
- Specifications: Review each paragraph of applicable specifications; discuss procedures to accomplish work; clarify any differences.

- Preliminary Work and Permits: Ensure the preliminary work, permits, and notifications are on file. If not on file, document action taken.
- Testing: Identify tests to be performed, frequency, and by whom; when and where tests are required; review the testing plan and log; ensure that test facilities has been approved.
- Safety: Review the Activity Hazard Analysis and ensure that it has been approved; review applicable portions of EM 385-1-1.
- Meeting Comments: Document Navy, Contracting Officer, or ROICC comments during the meeting.
- Other Items or Remarks: Document other items or remarks.

The Contracting Officer will be notified at least 48 hours prior to the start of the Preparatory Phase Inspection. The meeting will be conducted by the Project QC Engineer and attended by appropriate QC personnel and the work leader(s) responsible for the DFW. The results of the preparatory phase inspection will be documented on the Preparatory Phase Checklist form (Attachment E) or by separate meeting minutes prepared by the Project QC Engineer and attached to the Daily Production and QC Report. Results of preparatory phase inspections for field sampling and chemical data collection will be documented on the form titled Preparatory Phase Checklist for Chemical Data Collection, as provided in Attachment E.

Additional preparatory phases may be conducted on the same DFW as determined by the Client if the quality of ongoing work is unacceptable; or if there are changes in the applicable QC personnel or in the on-site production supervision or work crew; or if work on a DFW is resumed after a substantial period of inactivity; or if other problems develop.

9.1.2 Initial Phase

An Initial Phase Inspection will be performed at the beginning of a DFW. The initial phase inspection is performed to establish the level of workmanship and compliance with contract requirements for workmanship, materials, and tests. This inspection will include checking that preliminary workmanship is in compliance with the contract documents and the following items:

- Notification: document that notification was given to the Contracting Officer.
- Personnel Present: document personnel, position, and company/agency affiliation.
- Procedure Compliance: identify full compliance with procedures identified at preparatory phase; coordinate plans, specifications, and submittals.
- Preliminary Work: ensure preliminary work is complete and correct; if not document action taken.
- Workmanship: establish the level of workmanship and where the work is located; verify if a sample panel is needed or not.
- Resolution of Differences: document differences and the resolution; note comments.
- Safety: review job conditions using EM-385-1-1 and the job hazard analysis; record comments.
- Other: document any other conditions or comments.

The Project QC Engineer will conduct the inspection; appropriate QC personnel, work leader(s), and field crew responsible for the executing the work will perform the workmanship. The results of the initial phase inspection will be documented on the Initial Phase Checklist form (Attachment E) or by separate meeting minutes prepared by the Project QC Engineer and attached to the Daily Production and QC Report.

The initial phase will be repeated for each new crew to work on-site or any time acceptable specified quality standards are not being met or are revised.

9.1.3 Follow-Up Phase

The Follow-Up Phase is performed daily to ensure continued compliance with the level of workmanship established in the Initial Phase. Daily checks will be performed to ensure continuing compliance with contract requirements, including efficiency of operations, control testing, and corrective action implementation until completion of the DFW. Inspections will be documented on the Daily Quality Control Report. The follow-up phase inspection for field

sampling will be documented in the Daily Quality Control Report (see Attachment F for an example of the report form).

9.1.4 Completion Inspections

Completion Inspections will include the WESTON'S Punch-Out Inspection, and the Navy's Pre-Final Inspection and Final Inspection. The inspections and corrective actions will be completed within the schedule stated for completion of the entire work, or any particular increment thereof if the project is divided into increments by separate completion dates.

9.1.4.1 WESTON'S Punch-Out Inspection

The Punch-Out Inspection will be performed by WESTON'S QC Engineer near the completion of work or an increment the work: the QC Engineer and will conduct an inspection of the work and will develop the "punch list" of items that do not conform to the approved drawings and specifications. The punch list will include any items remaining on the rework items list that have not been corrected. A copy of the punch list will be provided to the Contracting Officer. The QC Engineer or staff will make follow-on inspections to ascertain that all deficiencies have been corrected. When this is completed, the QC Engineer will notify the Contracting Officer that the system is ready for their inspection.

9.1.4.2 Navy's Pre-Final Inspection

The Contracting Officer will perform the Pre-Final Inspection to verify that the system has been constructed satisfactorily and is fully operational. A "Pre-Final Punch List" may be developed as a result of this inspection. WESTON'S QC Engineer will ensure that all items on this list are corrected in a timely manner and prior to notification to the Navy that a Final inspection can be scheduled with WESTON.

9.1.4.3 Navy's Final Acceptance Inspection

The Final Acceptance Inspection will be scheduled by the Navy's Contracting Officer based on the results of the Pre-Final Inspection. WESTON will provide at least a 14 day notice to the Navy's Contracting Officer that the Pre-Final Punch List items have been completed, along with all remaining work performed under the contract.

9.2 INSPECTION DOCUMENTATION

Inspections will be recorded as described in Section 11; the information generated by inspections will be used to document and track deficiencies and corrective actions, where necessary. The Project QC Engineer will review the completed documents. Documents will be maintained on-site and will be available for inspection.

10. DEFICIENCIES AND CORRECTIVE ACTIONS

There are several mechanisms to identify services or activities that do not comply with the contract requirements. These mechanisms include the following actions:

- Inspections
- Tests
- QA audits
- Notification(s) from the appropriate parties

In each case, noncompliance issues will be specifically identified in documents generated as a result of implementing the site-specific project plans and the CQCP. It will be the responsibility of the Project QC Engineer to notify the appropriate parties of the noncompliance and to ensure that corrective action is taken as soon as possible.

If necessary, the Project QC Engineer has the authority and responsibility to stop work related to or affected by the noncompliance condition until action can be taken to correct the noncompliance condition or prevent it from affecting related or subsequent work. The Project QC Engineer may, based on discretion, require that the work be retested and/or re-inspected, if necessary, to confirm or disprove the noncompliance condition.

The Project QC Engineer may not permit any subsequent work to continue if that work is, or may be, affected by the noncompliance condition until one of the following events take place:

- The work is retested and/or re-inspected and found to be in compliance.
- The work is redone and subsequently retested and/or re-inspected and found to be in compliance.

10.1 DOCUMENTING DEFICIENCIES AND CORRECTIVE ACTIONS

As deficiencies are noted, they will be properly recorded. The Project QC Engineer will maintain the following documentation to track deficiencies and corrective actions:

- Deficiencies and corrective actions will be noted on the Daily Production and QC Report.

- Deficiencies requiring rework that are not corrected on the same day they are discovered will be documented using the Rework Items List shown in Appendix E. The reporting requirements for the Rework Items List are described in Section 11.7 of the CQCP.

- Deficiencies will be evaluated for root causes to eliminate recurring problems.

11. REPORTING PROCEDURES

Current records of QC operations, activities, and tests performed, including the work of subcontractors and suppliers, will be maintained. Documents generated as a result of the implementation of the CQCP and will undergo review and approval.

A master file of QC documents will be maintained at the project site. The master file may include the following documents, as applicable:

- Site-specific project design, plans, CQCP, and amendments
- Daily Production and QC Reports
- Inspection reports (by task)
- Test reports
- Shop drawings
- Vendor certificates/statements/data
- Redlined plans (i.e., as-built plans)
- QA audit reports
- Reports of noncompliance
- Change order correspondence
- Inspection logs

11.1 DAILY PRODUCTION REPORT

The Project Site Superintendent will prepare and issue Daily Production Reports using the form shown in Attachment F. This report will be provided to the Navy Resident Officer in Charge of Construction (ROICC) by 10:00 a.m. of the following workday and will include the following information:

(a) Date of report, report number, name of contractor, Contract Number, Contract Title and Location, and Site Superintendent present.

(b) Weather conditions in the morning and in the afternoon including maximum and minimum temperatures.

(c) Identify work performed by corresponding Schedule Activity Number, Modification Number, etc.

(d) List the Contractor and subcontractor personnel on the work site, their trades, employer, work location, description of work performed, hours worked by trade, daily total work hours on work site this date (include hours on continuation sheets), and total work hours from start of construction.

(e) A list of job safety actions taken and safety inspections conducted. Indicate that safety requirements have been met including the results on the following:

(1) Was a job safety meeting held this date? (If YES, attach a copy of the meeting minutes.)
(2) Were there any lost time accidents this date? (If YES, attach a copy of the completed OSHA report.)
(3) Was crane/man-lift/trenching/scaffold/high voltage electrical/high work/hazmat work done? (If YES, attach a statement or checklist showing inspection performed.)
(4) Was hazardous material/waste released into the environment? (If YES, attach a description of incident and proposed action.)

(f) Identify Schedule Activity No. related to safety action and list safety actions taken today and safety inspections conducted.

(g) Identify Schedule Activity No., Submittal #, and list equipment/material received each day that is incorporated into the job.

(h) Identify Schedule Activity No., Owner, and list construction and plant equipment on the work site including the number of hours used.

(i) Include a "remarks" section in this report which will contain pertinent information including directions received, problems encountered during construction, work progress and delays, conflicts or errors in the drawings or specifications, field changes, safety hazards encountered, instructions given and corrective actions taken, delays encountered and a record of visitors to the work site. For each remark given, identify the Schedule Activity No. that is associated with the remark.

Additional space required to contain daily information on the Daily Production Report will be placed on the Continuation Sheet(s). An unlimited number of Continuation Sheets may be added as necessary and attached to the Production Report.

11.2 DAILY QUALITY CONTROL REPORT

The Project QC Engineer, or designee, will prepare and issue Daily Quality Control Reports using the form shown in Attachment F. The Daily Quality Control Report will be provided,

along with the Daily Production Report, to the ROICC by 10:00 a.m. of the following workday. Reports are required for each day that work is performed, for every seven consecutive calendar days of no work, and on the last day of a no-work period, accounting for each calendar day throughout the life of the Contract. The reporting of work will be identified by terminology consistent with the construction schedule. Daily Quality Control Reports will be prepared, signed and dated by the Project QC Engineer, or designee, and will contain the following information:

(a) Date of report, report number, Contract Number, and Contract Title.

(b) Indicate if Preparatory Phase work was performed today (Yes/No checkboxes).

(c) If Preparatory Phase work was performed today (including on-site and off-site work), identify its Schedule Activity No. and Definable Feature of Work. The Index # is a cross reference to the Preparatory Phase Checklist. An example of the Index # is: 0025-P01, where "0025" is the Daily Quality Control Report Number, "P" indicates Preparatory Phase, and "01" is the Preparatory Phase Checklist number(s) for this date. Each entry in this section must be accompanied with a corresponding Preparatory Phase Checklist.

(d) Indicate if Initial Phase work was performed today (Yes/No checkboxes).

(e) If Initial Phase work was performed today (including on-site and off-site work), identify its Schedule Activity No. and Definable Feature of Work. The Index # is a cross reference to the Initial Phase Checklist. An example of the Index # is: 0025-I01, where "0025" is the Daily Quality Control Report Number, "I" indicates Initial Phase, and "01" is the Initial Phase Checklist number(s) for this date. Each entry in this section must be accompanied with a corresponding Initial Phase Checklist.

(f) Results of the Follow-up Phase inspections held today (including on-site and off-site work), including Schedule Activity No., the location of the definable feature of work, Specification Sections, etc. Indicate in the report for this definable feature of work that the work complies with the Contract as approved in the Initial Phase, work complies with safety requirements, and that required testing has been performed, and include a list of who performed the tests.

(g) List the rework items identified, but not corrected by close of business, along with its associated Schedule Activity Number.

(h) List the rework items corrected from the rework item list along with the corrective action taken and its associated Schedule Activity Number.

(i) Include a "remarks" section in this report which will contain pertinent information including directions received, quality control problem areas, deviations from the CQCP, construction deficiencies encountered, QC meetings held, acknowledgement that as-built drawings have been updated, corrective direction given by the QC Organization, and corrective action taken by the Contractor. For each remark given, identify the Schedule Activity No. that is associated with the remark.

(j) Daily Quality Control Report certification, signature, and date.

Additional space required to contain daily information on the Daily Quality Control Report will be placed on its Continuation Sheet(s). An unlimited number of Continuation Sheets may be added as necessary and attached to the Daily Quality Control Report.

11.3 PREPARATORY PHASE CHECKLIST

For each DFW in the Preparatory Phase, a Preparatory Phase Checklist (see Attachment E) will be completed. The completed checklist will accompany the submission of the Daily Quality Control Report of the same date. The following information will be on the Preparatory Phase Checklist:

(a) Specification Section, date of report, and Contract Number will be filled out. Duplicate this information in the header of the second page of the report.

(b) Definable Feature of Work, Schedule Activity No. and Index # entry and format will match the corresponding entry in the Preparatory Phase section of the Daily Quality Control Report.

(c) Personnel Present: Indicate the number of hours of advance notice that was given to the Government Representative and indicate (Yes/No checkboxes) whether or not the Government Representative was notified. Indicate the names of Preparatory Phase Meeting attendees, their position, and their associated company/government.

(d) Submittals: Indicate if submittals have been approved (Yes/No checkboxes); if no indicate what has not been submitted. Are materials on hand (Yes/No checkboxes) and if not, what items are missing. Check delivered material/equipment against approved submittals and comment as required.

(e) Material Storage: Indicate if materials/equipment is stored properly (Yes/No checkboxes) and, if not, what action is/was taken.

(f) Specifications: Review and comment on Specification Paragraphs that describe the material/equipment, procedure for accomplishing the work and clarify any differences.

(g) Preliminary Work & Permits: Ensure preliminary work is in accordance with the contract documents and necessary permits are on file; if not, describe the action taken.

(h) Testing: Identify who performs tests, the frequency, and where tests are to occur. Review the testing plan, report abnormalities, and indicate whether the test facilities have been approved.

(i) Safety: Indicate if the activity hazard analysis has been approved (Yes/No checkboxes) and comment on the review of the applicable portions of the EM 385-1-1.

(j) Meeting Comments: Note comments and remarks during the Preparatory Phase Meeting that were not addressed in previous sections of this checklist.

(k) Other Items or Remarks: Note any other remarks or items resulting from the Preparatory Phase Inspection.

(l) The Project QC Engineer will sign and date the checklist.

For some tasks, task specific checklists (see examples in Attachment E) will be completed and attached to the Preliminary Phase Checklist.

11.4 INITIAL PHASE CHECKLIST

For each DFW in the Initial Phase, an Initial Phase Checklist (see Attachment E) will be completed. The checklist will accompany the submission of the Daily Quality Control Report of the same date. The Initial Phase Checklist will have the following information:

(a) Specification Section, date of report, and Contract Number will be entered.

(b) Definable Feature of Work, Schedule Activity No., and Index # entry and format will match the corresponding entry in the Initial Phase section of the Daily Quality Control Report.

(c) Personnel Present: Indicate the number of hours of advance notice that was given to the Government Representative and indicate (Yes/No checkboxes) whether or not the Government Representative was notified. Indicate the names of Initial Phase Meeting attendees, their position, and name of company or government agency.

(d) Procedure Compliance: Comment on compliance with procedures identified during the Preparatory Phase Inspection and assurance that work is in accordance with plans, specifications, and submittals.

(e) Preliminary Work: Ensure preliminary work being placed is in compliance and, if not, what action is/was taken.

(f) Workmanship: Identify where initial work is located; if a sample panel is required (Yes/No checkboxes); is the initial work the sample (Yes/No checkboxes); and if Yes, describe the panel location and precautions taken to preserve the sample.

(g) Resolution: Comment on any differences and the resolutions reached.

(h) Check Safety: Comment on the safety review of the job conditions.

(i) Other: Note any other remarks or items resulting from the Initial Phase Inspection.

(j) Project QC Engineer will sign and date the checklist.

For some tasks, task specific checklists (see examples in Attachment E) will be completed and attached to the Preliminary Phase Checklist.

11.5 QUALITY CONTROL BINDERS ON-SITE

At the Project Site, establish and maintain a series of 3-ring binders that are divided as shown below. These binders will be readily available to the Navy during all business hours.

(a) Preparatory and Initial Phase Checklists arranged chronologically.

(b) Inspections, arranged chronologically.

(c) A current copy of the Testing Plan and Log, with supporting field test reports arranged chronologically.

(d) A current copy of the Rework Items List.

(e) Current copies of all punch lists issued by the Contractor's QC Staff and all punch lists issued by the Navy.

11.6 TESTING PLAN AND LOG

As tests are performed, the Project QC Engineer will record information onto the Testing Plan and Log (see Attachment E for an example of the log), including the date the test was conducted, the date the test results were forwarded to the Contracting Officer, remarks, and acknowledgement that an accredited or Contracting Officer-approved testing laboratory was used. A copy of the updated Testing Plan and Log will be attached to the last Daily Quality Control Report of each month.

11.7 REWORK ITEMS LIST

The QC Engineer will maintain a list of work that does not comply with the Contract, identifying what items need to be reworked, the date the item was originally discovered, the date the item will be corrected, and the date the item was corrected. There is no requirement to report a rework item that is corrected the same day it is discovered. A copy of the Rework Items List will be attached to the last Daily Quality Control Report of each month. WESTON will be responsible for including on the Rework Items List any such items needing rework, including those identified by the Contracting Officer. An example Rework Items List is shown in Attachment E.

11.8 AS-BUILT DRAWINGS

The Project QC Engineer and/or Site Superintendent will keep as-built drawing records up to date and current on a daily basis. The as-built drawings will be marked to show deviations which have been made from the Contract drawings. Deviations will be identified with the appropriate modifying document (e.g. Request for Information Number, Modification Number, etc.). The Project QC Engineer and/or Site Superintendent will initial each deviation and each revision. Upon completion of work, the Project QC Manager will furnish a certificate attesting to the accuracy of the as-built drawings prepared for submission to the Navy.

11.9 REPORT FORMS

The following forms will be used at the project:

- Daily Quality Control Report w/ continuation sheet(s),
- Daily Production Report w/ continuation sheet(s),
- Testing Plan and Log,
- Preparatory Phase Checklist,
- Initial Phase Checklist,
- Rework Items List.

Examples of WESTON'S forms and logs are provided in Appendices E and F of this plan.

12. NOTIFICATION OF CHANGES TO PROCEDURES

Where possible, after acceptance of the site-specific project plans or CQCP, the client will be notified in writing a minimum of seven calendar days prior to any proposed change. Proposed changes are subject to acceptance by the client. To notify the client, WESTON will use the Navy RFI Form. An RFI will be prepared and submitted for no cost changes.

There may be occasions when a seven-day notification is not possible (e.g., unexpected absence of personnel due to injury or illness). On these occasions, the client will be notified within 72 hours of the change (a note on the Daily Production and QC Report may be sufficient, depending on client requirements).

13. AUDITS

Audits will be conducted by WESTON personnel on a routine basis to ensure compliance with the project and contract. Audits will verify that the procedures outlined in the site-specific project plans or CQCP are being conducted as stated. Site safety and health audits will follow the procedures outlined in the SHSP. In addition to WESTON internal audits, the Navy ROICC will perform quality assurance audits. The following personnel, or their designated alternates, will be responsible to conduct audits in the area stated:

Personnel Responsible to Conduct Audits	Requirement Document
Project QC Engineer	CQCP and site-specific project plans
Site Health and Safety Officer	SHSP
Chemical QC Manager	QAPP, Field Sampling Plan
ROICC	All of the above

The frequency of audits will be established and provided in the site-specific project plans. Audit findings will be summarized using the Construction QC/QA Plan Audit Checklist shown in Attachment G. The following information will be included with the Audit Summary Report:

- Area of concern
- Corrective action
- Responsible person
- PM approval of corrective action (i.e., within SOW, etc.)
- Documentation
- Schedule for corrective action.

Ongoing audits will target problem areas identified in previous audits to ensure continued compliance.

14. REFERENCES

American National Standards Institute/American Society for Quality Control. 1994. *Standard ANSI/ASQC E4-1944, Specifications and Guidelines for Quality Systems for Environmental Data Collection and Environmental Technology Programs.*

Department of the Navy (DON). 1997. *Final Interim Record of Decision (ROD), Operable Unit 2A – Site 24 – VOC Source Area, Vadose Zone, Marine Corps Air Station, El Toro, California.* San Diego, California. September.

DON. 2002. *Final Record of Decision (ROD), Operable Unit 1, Site 18 – Regional Volatile Organic Compound Groundwater Plume; Operable Unit 2, Site 2 – VOC Source Area, Former Marine Corps Air Station, El Toro, California.* San Diego, California. June.

Earth Tech, Inc. 2002. *Draft Final Site Closure Report, Vadose Zone Remediation, IRP Site 24, Volatile Organic Compounds Source Area, Former Marine Corps Air Station, El Toro, California.* San Diego, California. June.

International Organization for Standardization (ISO). 1999. ISO 17025 (former ISO Guide 25), *General Requirements for the Competence of Calibration and Testing Laboratories.*

Settling Federal Agencies (SFA), Orange County Water District, and Irvine Ranch Water District. 2001. *Settlement Agreement Among the Settling Federal Agencies (SFA), Orange County Water District, and Irvine Ranch Water District in Regard to Former Marine Corps Air Station, El Toro.*

Weston Solutions, Inc. 2002a. *Corporate Quality Management Plan.*

Weston Solutions, Inc. 2002b. *Procurement Procedures Manual.*

Weston Solutions, Inc, 2004. *Draft Final Remedial Action Work Plan. Former Marine Corps Air Station, El Toro, California.* September.

Figures

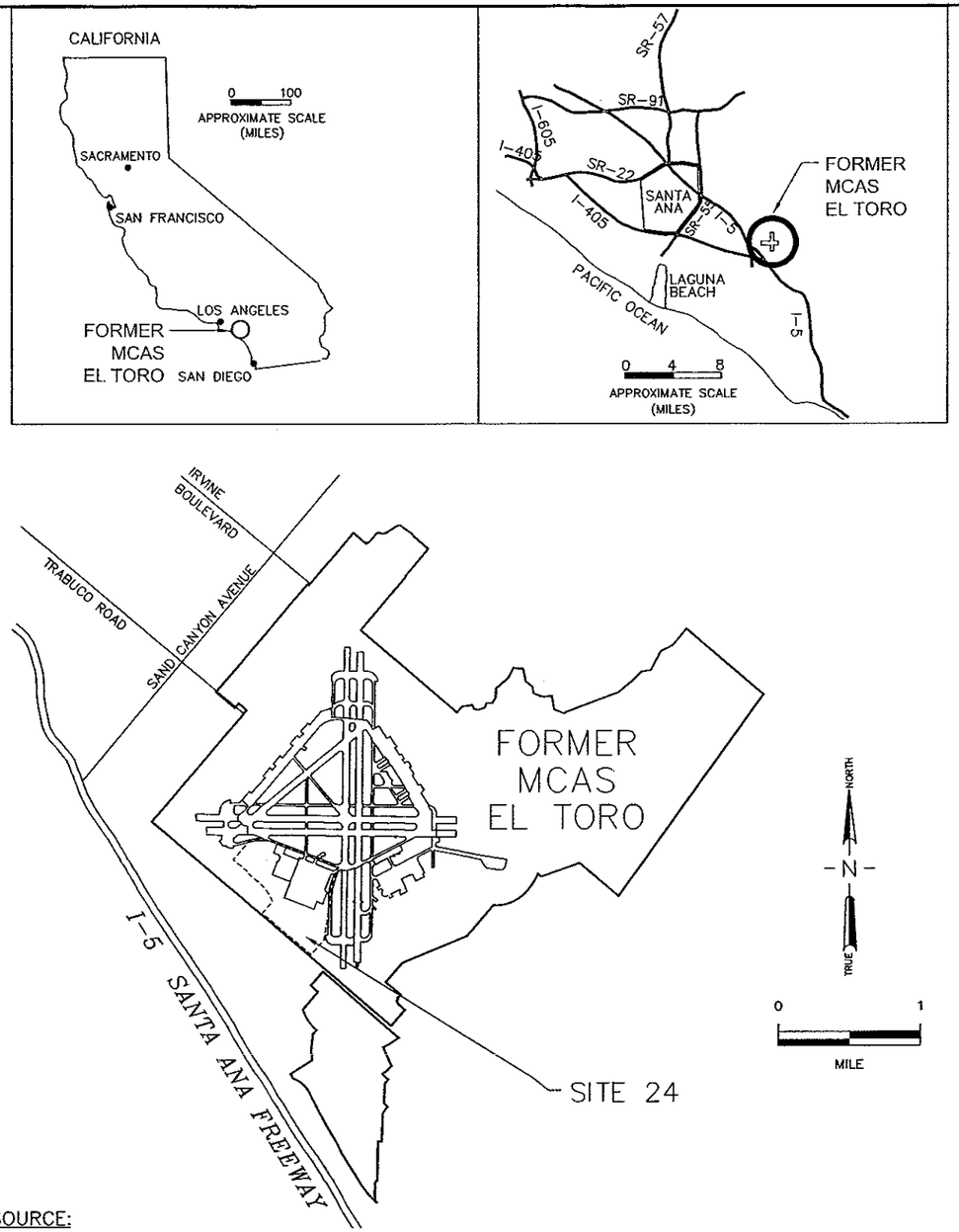

SOURCE:
EARTH TECH, INC. 60% DESIGN SUBMITTAL, REMEDIAL DESIGN SHALLOW GROUNDWATER UNIT REMEDY, IRP SITE 24, DECEMBER 2003, NAVAL FACILITIES ENGINEERING COMMAND CONTRACT N6272-94-D-0048.

FIGURE 1

WESTON SOLUTIONS

1575 Treat Boulevard
Suite 212
Walnut Creek, California
94598

PROJECT LOCATION MAP
IRP SITE 24 VOC SOURCE AREA, SGU REMEDY
FORMER MCAS EL TORO
Irvine, California

SOURCE:
EARTH TECH, INC. 60% DESIGN SUBMITTAL, REMEDIAL DESIGN SHALLOW GROUNDWATER UNIT REMEDY, IRP SITE 24, DECEMBER 2003, NAVAL FACILITIES ENGINEERING COMMAND CONTRACT N6272-94-D-0048.

WESTON SOLUTIONS
1575 Treat Boulevard
Suite 212
Walnut Creek, California
94598

FIGURE 2

SITE PLAN
IRP SITE 24 VOC SOURCE AREA, SGU REMEDY
FORMER MCAS EL TORO
San Diego, California

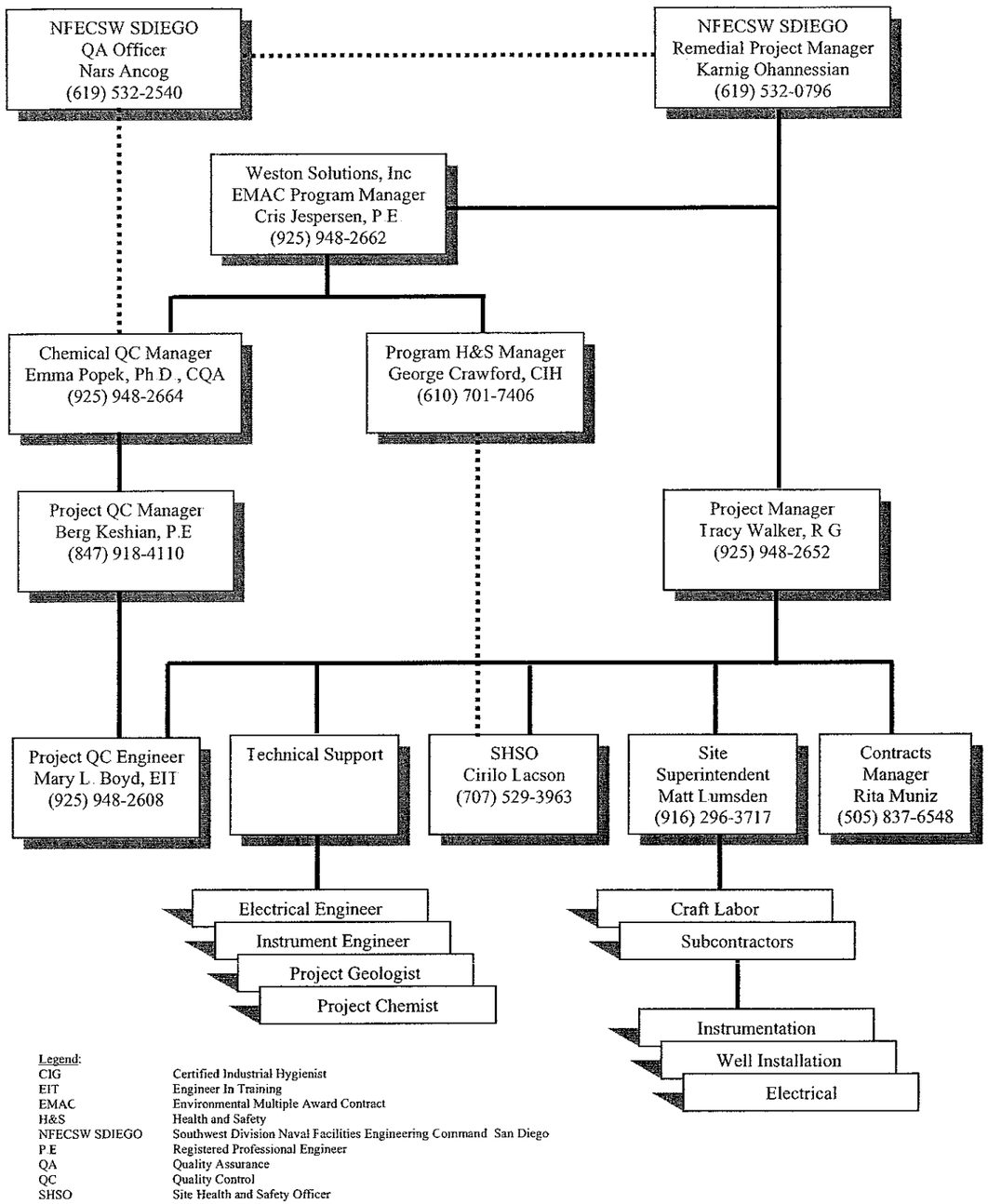

Legend:

CIG	Certified Industrial Hygienist
EIT	Engineer In Training
EMAC	Environmental Multiple Award Contract
H&S	Health and Safety
NFECSW SDIEGO	Southwest Division Naval Facilities Engineering Command San Diego
P.E	Registered Professional Engineer
QA	Quality Assurance
QC	Quality Control
SHSO	Site Health and Safety Officer

FIGURE 3

WESTON SOLUTIONS

1575 Treat Boulevard
Suite 212
Walnut Creek, California
94598

PROJECT ORGANIZATION CHART
IRP SITE 24 VOC SOURCE AREA, SGU REMEDY
FORMER MCAS EL TORO
Irvine, California

ATTACHMENT A

Letter of Designation

Letter of Designation

Contractor Quality Control Plan
Shallow Groundwater Treatment Unit 24
Former Marine Corps Air Station, El Toro, California
Contract Number N68711-01-D-6010
Task Order 0004

October 11, 2004

Dear Ms. Popek, Mr. Keshian, Ms. Boyd, and Mr. Lumsden:

This letter serves to assign the responsibilities of the Chemical Quality Control (QC) Manager to Ms. Emma Popek, Ph. D.; the Project QC Manger to Mr. Berg Keshian, P.E.; the Project QC Engineer to Ms. Mary Boyd; and the Site Superintendent, as a QC designee of the Project QC Engineer, to Mr. Matt Lumsden.

In the roles of Chemical QC Manager, Project QC Manager, Project QC Engineer, and designee of the Project QC Engineer, you have the responsibilities and authorities as described in Section 3.4 of the Weston Solutions, Inc. *Corporate Quality Management Plan* (CQMP). You are granted the following authorities:

- Stop work authority that you will exercise consistent with the CQMP and project Contractors Quality Control Plan (CQCP).
- The authority to approve submittals that have been certified by qualified submittal reviewers.
- The authority to ensure the quality of work and direct the removal and/or replacement of non-conforming materials or work.

In this capacity, you will report directly to me and will administer the established requirements for the project that are documented in the CQCP.

Sincerely yours,

Owen B. Douglass, Jr., Ph.D., CIH
Director, Corporate Environmental Health and Safety
And Quality Assurance
Weston Solutions, Inc.

ATTACHMENT B

Submittal Register

SUBMITTAL REGISTER

CONTRACT NUMBER: N6877-01-D-6010

TITLE AND LOCATION: Shallow Groundwater Unit IRP 24 Former Marine Corps Air Station, El Toro, CA

CONTRACTOR: Weston Solutions, Inc. 1575 Treat Blvd #212, Walnut Creek, CA 94598 (925) 945-2600

ACTIVITY NO	TRANSMITTAL NO	SPEC SECT	DESCRIPTION OF ITEMS SUBMITTED	PARAGRAPH #		CONTRACTOR SCHEDULE DATES			CONTRACTOR ACTION		APPROVING AUTHORITY						
						SUBMIT	APPR NEEDED BY	MATERIAL NEEDED BY		DATE SUBMITTED				ACTION CODE	DATE COMMENTS SENT TO CONTRACTOR		REMARKS
(A)	(B)	(C)	(D)	(E)	(F)	(G)	(H)	(I)	(J)	(K)		(M)	(N)	(O)	(P)	(Q)	(R)

SUBMITTAL FORM, JAN 96

ATTACHMENT C

Transmittal Form

1575 Treat Boulevard Suite 212
Walnut Creek CA 94598
(925) 948-2662

Transmittal Form

TO: Karnig H. Ohannessian, Remedial Project Manager **DATE:**
Marine Corps BRAC Team
1220 Columbia Street, Suite 870
San Diego, CA 92101
(619) 532-0796

We are sending you:

☐	Attached	☐	Under Separate Cover		
☐	Prints	☐	Plans	☐	Samples
☐	Specifications	☐	Copy of Letter	☐	Change Order
☐	Shop Drawings	☐	Other (explain)		

Copies	Date	Submittal No.	Description

We are transmitting as checked below:

☐	For Approval	☐	For Your Use	Copies for Approval
☐	As Requested	☐	Returned After Loan to Us	Copies for Distribution
☐	For Review and Comment	☐	Other (explain)	Corrected Prints

I hereby certify that the material, equipment, or article shown and marked on this submittal are those proposed to be incorporated with Contract No N68711-01-D-6010 TO 0004, complies with the contract specifications and is submitted for Navy approval.
Project Manager

Tracy Walker, Project Manager _____ Date _____

QC Manager/Engineer/Designer _____ Date _____

Electronic copy to:

When returning, check below, as appropriate:

☐	Approved	☐	Rejected	____	Copies for Approval
☐	Approved as Corrected	☐	Submit	____	Copies for Distribution
☐	Revise and Resubmit	☐	Other (explain)	____	Corrected Prints

REMARKS:

Signed: _____ **Date:** _____

ATTACHMENT D

Project Filing Index

PROJECT FILE INDEX

(For Project 12954 El Toro SGU 24)

1.0 Contract

2.0 Communications (Chronological)

3.0 Financial

4.0 Project Progress Surveillance and Control

5.0 Quality Assurance/Quality Control and Safety

6.0 Data and Information

7.0 Scientific Calculations, Evaluations, and Designs

8.0 Conceptual Calculations, Evaluations, and Designs

9.0 Design Engineering

10.0 Construction Management

11.0 Design and Construct

12.0 Future Expansion

13.0 Future Expansion

14.0 Future Expansion

15.0 Future Expansion

16.0 Future Expansion

17.0 Future Expansion

18.0 Review Documents: Draft reports, comment/response documents, review prints.

19.0 Final Deliverables: Camera ready copy, originals, copies of final reports, as-built plans and specifications, the final product of the project.

20.0 Reference Materials: Bibliographies, hard copies if appropriate, books, pamphlets, reports, publications.

ATTACHMENT E

Forms, Logs, and Checklists

Testing Plan and Log

TESTING PLAN AND LOG

CONTRACT NUMBER N68711-01-D-6010 Task Order 0004	PROJECT TITLE AND LOCATION Shallow Groundwater Remedial Action, IRP Site 24, El Toro, CA	CONTRACTOR: Weston Solutions, Inc. 1575 Treat Blvd, Suite 212, Walnut Creek, CA

SPECIFICATION SECTION AND PARAGRAPH NUMBER	Frequency Or Quantity	TEST REQUIRED	ACCREDITED/ APPROVED LAB		SAMPLED BY	TESTED BY	LOCATION OF TEST		DATE COMPLETED	DATE FORWARDED TO CONTR. OFF.	REMARKS
			YES	NO/NA			ON SITE	OFF SITE			
Division 01 – General Requirements											
01110		None									
01310		None									
01330		None									
01355		None									
01450		None									
01525		None									
01770		None									
01781		None									
Division 02 – Site Work											
02120	varied	As required by TSDF for off-site disposal of waste									
02222	1-3	ASTM C 136: Gradation of Aggregates						X			
02222	1-4	ASTM D 698: Lab compaction using Standard Effort						X			
02222	1-4	ASTM D 1557: Lab compaction using Modified Effort						X			
02222	1 test/1000 sf/lift	ASTM D 2922 & 3017: Density of Soil & Water Content By In Place Nuclear Methods					X				
02525	39	ASTM D 2487: Lithologic boring logs for each well	NA				X				
02525	39	EPA 600/4-79/020: Well development water for ph, temp, spec conductivity,	NA				X				
02821		None									

TESTING PLAN AND LOG

CONTRACT NUMBER N68711-01-D-6010 Task Order 0004	PROJECT TITLE AND LOCATION Shallow Groundwater Remedial Action, IRP Site 24, El Toro, CA	CONTRACTOR: Weston Solutions, Inc. 1575 Treat Blvd, Suite 212, Walnut Creek, CA

SPECIFICATION SECTION AND PARAGRAPH NUMBER	Frequency Or Quantity	TEST REQUIRED	ACCREDITED/ APPROVED LAB		SAMPLED BY	TESTED BY	LOCATION OF TEST		DATE COMPLETED	DATE FORWARDED TO CONTR. OFF.	REMARKS
			YES	NO/NA			ON SITE	OFF SITE			
Division 03 - Concrete							X				
03300	2/truck load	ASTM C 143/ C 143M: Slump of Cement Concrete	X					X			
03300	1	ASTM C 33: Specification for Concrete Aggregates	X					X			
03300	1 set per day	ASTM C 39: Compressive Strength	X					X			
03330	1	ACI 318: Water cement ratio curve for each proposed mix design	X					X			
Division 11 - Equipment											
11211	1/pump	Factory test report for performance criteria of 30 HP pumps		Done by mfg				X			
11211	1/pump	Field test for proper operation of 30 HP pumps		X			X				
11212	39	Factory test report for performance criteria of submersible pumps		Done by mfg				X			
11212	39	Field test for proper operation of submersible pumps		X			X				
11246	2	Hydrostatic test of tanks (2)		Done by mfg				X			
11246	2	Hydrostatic test of tanks (2)		X			X				
Division 15 - Mechanical											
15050	Multiple	Hydrostatic field tests on installed HDPE pipe		X			X				
15051		None									
15064	multiple	Hydrostatic field tests		X			X				

TESTING PLAN AND LOG

CONTRACT NUMBER N68711-01-D-6010 Task Order 0004	PROJECT TITLE AND LOCATION Shallow Groundwater Remedial Action, IRP Site 24, El Toro, CA	CONTRACTOR: Weston Solutions, Inc. 1575 Treat Blvd, Suite 212, Walnut Creek, CA

SPECIFICATION SECTION AND PARAGRAPH NUMBER	Frequency Or Quantity	TEST REQUIRED	ACCREDITED/ APPROVED LAB		SAMPLED BY	TESTED BY	LOCATION OF TEST		DATE COMPLETED	DATE FORWARDED TO CONTR. OFF.	REMARKS
			YES	NO/NA			ON SITE	OFF SITE			
		on installed PVC pipe									
15065		None									
Division 16 - Electrical											
16010	Multiple	Field-test installed wiring for short circuits, open circuits, neutral leaks, improper grounds		X			X				
16010	Multiple	Ground resistance test of each main grounding electrode		X			X				
	At completion	Demonstrate that entire electrical system is free from short circuits and improper grounds.		X			X				
16400		None									
Division 17 - Control System											
1734	At Commissioning	Test system as a whole for alarms, interlocks, auto-dialer, communication, shutdown, data acquisition, etc.		X							
1756	At commissioning	Test system as a whole for alarms, interlocks, auto-dialer, communication, shutdown, data acquisition, etc.		X							

Legend:

ACI	American Concrete Institute
ASTM	American Society of Testing Materials
HDPE	high density polyethylene
mfg	manufacturer
NA:	not applicable
PVC	polyvinyl chloride
Rqmts	requirements
TSDF	transfer storage and disposal facility

Preparatory Phase Inspection Checklist

PREPARATORY PHASE CHECKLIST

(CONTINUED ON SECOND PAGE)

SPEC SECTION	DATE

CONTRACT NO	DEFINABLE FEATURE OF WORK	SCHEDULE ACT NO	INDEX #
N68711-01-D-6010 TO 0004			

PERSONNEL PRESENT

GOVERNMENT REP NOTIFIED ____ HOURS IN ADVANCE: YES ☐ NO ☐

NAME	POSITION	COMPANY/GOVERNMENT

SUBMITTALS

REVIEW SUBMITTALS AND/OR SUBMITTAL REGISTER HAVE ALL SUBMITTALS BEEN APPROVED? YES ☐ NO ☐

IF NO WHAT ITEMS HAVE NOT BEEN SUBMITTED? _____

ARE ALL MATERIALS ON HAND? YES ☐ NO ☐

IF NO WHAT ITEMS ARE MISSING? _____

CHECK APPROVED SUBMITTALS AGAINST DELIVERED MATERIAL (THIS SHOULD BE DONE AS MATERIAL ARRIVES)

COMMENTS: _____

MATERIAL STORAGE

ARE MATERIALS STORED PROPERLY? YES ☐ NO ☐

IF NO WHAT ACTION IS TAKEN? _____

SPECIFICATIONS

REVIEW EACH PARAGRAPH OF SPECIFICATIONS _____

DISCUSS PROCEDURE FOR ACCOMPLISHING THE WORK _____

CLARIFY ANY DIFFERENCES _____

PRELIMINARY WORK & PERMITS

ENSURE PRELIMINARY WORK IS CORRECT AND PERMITS ARE ON FILE

IF NOT WHAT ACTION IS TAKEN? _____

PREPARATORY PHASE CHECKLIST

(CONTINUED FROM FIRST PAGE)

SPEC SECTION	DATE

CONTRACT NO	DEFINABLE FEATURE OF WORK	SCHEDULE ACT NO	INDEX #
N68711-01-D-6010 TO0004			

TESTING

IDENTIFY TEST TO BE PERFORMED FREQUENCY AND BY WHOM

WHEN REQUIRED?

WHERE REQUIRED?

REVIEW TESTING PLAN

HAS TEST FACILITIES BEEN APPROVED?

SAFETY

ACTIVITY HAZARD ANALYSIS APPROVED? YES ☐ NO ☐

REVIEW APPLICABLE PORTION OF EM 385-1-1

MEETING COMMENTS

NAVY/ROICC COMMENTS DURING MEETING

OTHER ITEMS OR REMARKS

OTHER ITEMS OR REMARKS:

QC ENGINEER DATE

Task Specific
Preparatory Phase Inspection Checklists

WESTON SOLUTIONS			Contract No.: EMAC No. N68711-01-D-6010
Location: Installation Restoration Program (IRP) Site 24, Volatile Organic Compounds (VOCs) Source Area **Project Location:** Former Marine Corps Air Station (MCAS), El Toro, California			**Prep Phase Inspection Date:**
Feature of Work: Mobilization of Personnel/Equipment and Setup of Temporary Facilities	**Specifications:** Design Submittal		
Requirements/Reference	**Specification Section**	**QC Initials & Date**	**Remarks**
Preparatory Inspection			
1. Has the Design Submittal been approved prior to mobilization?			
2. Are the required personnel mobilized and on-site?			
3. Are all employees in compliance with applicable requirements listed in the WESTON H&S Plan?			
4. Have all employees reviewed the H&S Plan and signed the H&S Plan Acknowledgement form?			
5. Has all equipment mobilized to the site been inspected? Is each piece of equipment with the required safety materials?			
6. Have all the appropriate notifications been made as required in Section 3.4.1 of the RAWP?			
7. Have the locations for the field trailer, decontamination pad, equipment storage, and laydown area been established?			
8. Have the appropriate utilities been set up (phone, power, water, etc.)			
9. Has the site been properly delineated and fenced? Has the proper signage been set up at the site?			
10. Have the appropriate facilities been established (i.e. sanitary facilities, trash collection, etc.)			
11. Have site communications been established (two-way radios)?			
12.			
13.			
14.			
15.			
16.			

Identification of Participating Organizations/Personnel

Subcontractor /Personnel _____

WESTON Project QC Engineer _____

WESTON SOLUTIONS			Contract No.: EMAC No. N68711-01-D-6010
Location: Installation Restoration Program (IRP) Site 24, Volatile Organic Compounds (VOCs) Source Area **Project Location:** Former Marine Corps Air Station (MCAS), El Toro, California			**Prep Phase Inspection Date:**
Feature of Work: Extraction Well Installation	**Specifications:** Section 02525, Section 11212, and Section 15051		
Requirements/Reference	**Specification Section**	**QC Initials & Date**	**Remarks**
Preparatory Inspection			
1. Are the required design submittals and specifications been approved by the appropriate parties?	02525; 11212; 15051		
2. Are all employees in compliance with applicable requirements listed in the WESTON H&S Plan?	Appendix C SHSP		
3. Have all employees reviewed the H&S Plan and signed the H&S Plan Acknowledgement form?	Appendix C SHSP		
4. Has the El Toro MCAS Utility Clearance Form been submitted to the ROICC for approval?			
5. Have California Well Standards 74-81 and 74-90 been reviewed by the Project Geologist?			
6. Has the Orange County Environmental Health Division, Water Quality Programs "Application for Well Construction Permit" been submitted for each well, prior to well construction or destruction?			
7. Has USA been notified at least 72 hours prior to beginning drilling activities? Is the Ticket # current?			
8 Has a "Utility Clearance Request Department of the Navy, Contractor/Tenant, MCAS El Toro" been completed, submitted and approved prior to drilling, trenching, digging, or connecting utilities? (Approval will be obtained from the ROICC LA.)			
9. Has the drilling subcontractor been procured, scheduled, and submitted all appropriate paperwork to conduct work?			
10 Has all equipment brought in by the Subcontractor been inspected? Is each piece of equipment with the required safety equipment? Has the WESTON equipment inspection form been provided and discussed with the Subcontractor?			
11. Has the Scope of Work been discussed by all appropriate parties?			

WESTON SOLUTIONS	Contract No.: EMAC No. N68711-01-D-6010
Location: Installation Restoration Program (IRP) Site 24, Volatile Organic Compounds (VOCs) Source Area **Project Location:** Former Marine Corps Air Station (MCAS), El Toro, California	**Prep Phase Inspection Date:**
Feature of Work: Extraction Well Installation	**Specifications:** Section 02525, Section 11212, and Section 15051

Requirements/Reference	Specification Section	QC Initials & Date	Remarks
Preparatory Inspection			
12. Do the materials to be used meet the Specifications and have the submittals been approved and or submitted for information only? (e.g., grout, sand, clean water, well casings, screens, pumps, etc.)	02525 Part 2; 15051 Part 2		
13. Have all the material been delivered to the job site?			
14. Have all the applicable soil borings and well construction requirements been reviewed by the Project Geologist and any other appropriate parties?			
15. Have the well locations been staked in the field?			
16 Have the 35 extraction pumps (Grundfos stainless steel pumps) been procured and on-site? Are they on-schedule for delivery?	11212 Part 2		
17.			
18.			
19.			
20.			
21.			
22.			
23.			
24.			

Identification of Participating Organizations/Personnel

Subcontractor /Personnel _____

WESTON Project QC Engineer _____

WESTON SOLUTIONS	Contract No.: EMAC No. N68711-01-D-6010
Location: Installation Restoration Program (IRP) Site 24, Volatile Organic Compounds (VOCs) Source Area **Project Location:** Former Marine Corps Air Station (MCAS), El Toro, California	**Prep Phase Inspection Date:**
Feature of Work: Trenching	**Specifications:** Section 02222

Requirements/Reference	Specification Section	QC Initials & Date	Remarks
Preparatory Inspection			
1 Are the required design submittals and specifications approved by the appropriate parties?	02222		
2 Are all employees in compliance with applicable requirements listed in the WESTON H&S Plan?	Appendix C SHSP		
3. Have all employees reviewed the H&S Plan and signed the H&S Plan Acknowledgement form?	Appendix C SHSP		
4. Has the El Toro MCAS Utility Clearance Form been submitted to the ROICC for approval?			
5. Has USA been notified at least 72 hours prior to beginning drilling activities? Is the Ticket # current?			
6. Has a "Utility Clearance Request Department of the Navy, Contractor/Tenant, MCAS El Toro" been completed, submitted and approved prior to drilling, trenching, digging, or connecting utilities? (Approval will be obtained from the ROICC LA.) Have all utilities been marked?	02222 Para 3.1.1		
7. Has all equipment brought in by the Subcontractor been inspected? Is each piece of equipment with the required safety equipment? Has the WESTON equipment inspection form been provided and discussed with the Subcontractor?			
8. Has the Scope of Work been discussed by all appropriate parties?	02222 Part 3		
9. Has the WESTON FLD 28 been reviewed by all appropriate personnel?			
10. Have all the trench alignments been marked in the field?			
11. If trenching is to be done on roadways, is there a plan in place for traffic diversion and control?			
12. Have the existing conditions been photographed for documentation purposes?			
13. Has the geotechnical laboratory (Kleinfelder, Inc) been scheduled for laboratory and in-place density tests?			
14.			

WESTON SOLUTIONS	Contract No.: EMAC No. N68711-01-D-6010
Location: Installation Restoration Program (IRP) Site 24, Volatile Organic Compounds (VOCs) Source Area **Project Location:** Former Marine Corps Air Station (MCAS), El Toro, California	**Prep Phase Inspection Date:**
Feature of Work: Trenching	**Specifications:** Section 02222

Requirements/Reference	Specification Section	QC Initials & Date	Remarks
Preparatory Inspection			
15.			
16.			
17.			
18.			
19.			
20.			
21.			

Identification of Participating Organizations/Personnel

Subcontractor /Personnel _____

WESTON Project QC Engineer _____

WESTON SOLUTIONS	Contract No.: EMAC No. N68711-01-D-6010
Location: Installation Restoration Program (IRP) Site 24, Volatile Organic Compounds (VOCs) Source Area **Project Location:** Former Marine Corps Air Station (MCAS), El Toro, California	**Prep Phase Inspection Date:**
Feature of Work: Piping Installation	**Specifications:** Section 15051 (Vault Piping), Section 15064 (Compound Piping), and Section 15065 (HDPE Piping) as appropriate

Requirements/Reference	Specification Section	QC Initials & Date	Remarks
Preparatory Inspection			
1. Are the required design submittals and specifications approved by the appropriate parties?	15051, 15064, 15065 as appropriate		
2 Are all employees in compliance with applicable requirements listed in the WESTON H&S Plan?	Appendix C SHSP		
3 Have all employees reviewed the H&S Plan and signed the H&S Plan Acknowledgement form?	Appendix C SHSP		
4 Have all the manufacturer's certificates and data sheets been submitted for the piping?	15051 Para 1.2; 15064, Para 1.3; 15065 Para 1.2, as appropriate		
5 Has the material been delivered or is it on schedule?			
6 Are trained personnel available and scheduled to perform the work (e.g., fusion welding HDPE pipe)?			
7 Has all equipment brought in been inspected? Is each piece of equipment with the required safety equipment?			
8. Has the Scope of Work been discussed by all appropriate parties?	15051, 15064, 15065 as appropriate		
9. Has the piping materials been inspected upon delivery to ensure the correct material was delivered and is free of damage?			
10. Is the material properly stored and protected?	15051 Para 1.3; 15064, Para 1.4; 15065 Para 1.3, as appropriate		
11. Are leak testing instruments on site?			
12.			
13.			
14.			
15.			
16.			
17.			

WESTON SOLUTIONS	**Contract No.:** EMAC No. N68711-01-D-6010
Location: Installation Restoration Program (IRP) Site 24, Volatile Organic Compounds (VOCs) Source Area **Project Location:** Former Marine Corps Air Station (MCAS), El Toro, California	**Prep Phase Inspection Date:**
Feature of Work: Piping Installation	**Specifications:** Section 15051 (Vault Piping), Section 15064 (Compound Piping), and Section 15065 (HDPE Piping) as appropriate

Requirements/Reference	Specification Section	QC Initials & Date	Remarks
Preparatory Inspection			
18.			
19.			
20.			
21.			
22.			
23.			
24.			

Identification of Participating Organizations/Personnel

Subcontractor /Personnel _____

WESTON Project QC Engineer _____

WESTON SOLUTIONS	Contract No.: EMAC No. N68711-01-D-6010
Location: Installation Restoration Program (IRP) Site 24, Volatile Organic Compounds (VOCs) Source Area **Project Location:** Former Marine Corps Air Station (MCAS), El Toro, California	**Prep Phase Inspection Date:**
Feature of Work: Backfill and Compaction	**Specifications:** Section 02222 (also references Section 15050)

Requirements/Reference	Specification Section	QC Initials & Date	Remarks
Preparatory Inspection			
1. Has a geotechnical company been procured to perform the geotechnical lab and field testing?			
2. Have the health and safety requirements for the subcontractor doing the work been reviewed?	Appendix C SHSP		
3. Have they signed the SHSP Acknowledgement Sheet and have they been provided an orientation on the site?	Appendix C SHSP		
4. Have all the piping sections and leak tests been conducted is the section ready for backfill?	15050		
5. Has bedding material under and around the pipe been placed?	02222 Para 3.4.4		
6. Is backfill material available? Does it meet project specifications?	02222 Part 2		
7. Has a proctor curve (ASTM D 1587) been prepared for the material used as backfill? Is there a proctor curve for each type of material used and/or significant differences in soil type?	02222 Para 1.3		
8 Has all the licensing and appropriate documentation been provided by the Subcontractor for the nuclear gage?	02222 Para 1.3		
9 Have the specific MCAS-specific requirements been reviewed for bringing a nuclear gage on base?			
10. Has the geotechnical firm (Kleinfelder, Inc.) been scheduled for in-place soil density tests using nuclear gage?			
11.			
12.			
13.			
14.			
15.			
16.			
17.			

Identification of Participating Organizations/Personnel

Subcontractor /Personnel _____

WESTON Project QC Engineer _____

WESTON SOLUTIONS	Contract No.: EMAC No. N68711-01-D-6010
Location: Installation Restoration Program (IRP) Site 24, Volatile Organic Compounds (VOCs) Source Area **Project Location:** Former Marine Corps Air Station (MCAS), El Toro, California	**Prep Phase Inspection Date:**
Feature of Work: Concrete Work for Pad Installation	**Specifications:** Section 03300

Requirements/Reference	Specification Section	QC Initials & Date	Remarks
Preparatory Inspection			
1 Has a subcontractor been procured to perform the concrete work or are qualified WESTON personnel been made available			
2. Have the health and safety requirements for the employees doing the work been reviewed?	Appendix C SHSP		
3. Have they signed the SHSP Acknowledgement Sheet and have they been provided an orientation on the site?	Appendix C SHSP		
4. Has the area for the concrete pad been surveyed and staked in the field (corner, off-sets, cuts, fills, grade stakes, etc.)			
5. Has the design for the concrete pad been reviewed by all relevant personnel?			
6. Have all the required submittals been submitted and approved for conformance with the Specifications?	03300 Para 1.2		
7.			
8.			
9.			
10.			
11.			
12.			
13.			
14.			
15.			
16.			
17.			

Identification of Participating Organizations/Personnel

Subcontractor /Personnel _____

WESTON Project QC Engineer _____

WESTON SOLUTIONS	Contract No.: EMAC No. N68711-01-D-6010
Location: Installation Restoration Program (IRP) Site 24, Volatile Organic Compounds (VOCs) Source Area **Project Location:** Former Marine Corps Air Station (MCAS), El Toro, California	**Prep Inspection Date:**
Feature of Work: Equalization Tank Installation	**Specifications:** Section 11246 (also references Section 03300)

Requirements/Reference	Specification Section	QC Initials & Date	Remarks
Preparatory Inspection			
1. Have the health and safety requirements for the employees doing the work been reviewed?	Appendix C SHSP		
2. Have they signed the SHSP Acknowledgement Sheet and have they been provided an orientation on the site?	Appendix C SHSP		
3. Have the submittals for the equalization tank been submitted, reviewed for conformance with the specifications, and procured?	11246		
4. Have the lead times for the procurement of the equalization tank been taken into account?			
5. Has FLD 23 been reviewed for installation of the equalization tank?			
6. Is the tank on-site and ready for installation or is it on schedule for delivery?			
7. Have the manufacturer's instructions for installation of the tank been reviewed?			
8. Is the concrete pad constructed and ready for installation of the tank?	03300		
9. Has the concrete surface been checked to ensure it is level?			
10.			
11.			
12.			
13.			
14.			
15.			
16.			

Identification of Participating Organizations/Personnel

Subcontractor /Personnel _____

WESTON Project QC Engineer _____

WESTON SOLUTIONS	Contract No.: EMAC No. N68711-01-D-6010
Location: Installation Restoration Program (IRP) Site 24, Volatile Organic Compounds (VOCs) Source Area **Project Location:** Former Marine Corps Air Station (MCAS), El Toro, California	**Prep Phase Inspection Date:**
Feature of Work: Electrical Work	**Specifications:** Section 16010, Section 16050, and Section 16400 as appropriate

Requirements/Reference	Specification Section	QC Initials & Date	Remarks
Preparatory Inspection			
1. Have the health and safety requirements for the employees doing the work been reviewed?	Appendix C SHSP		
2. Have they signed the SHSP Acknowledgement Sheet and have they been provided an orientation on the site?	Appendix C SHSP		
3. Have the submittals for the electrical work and materials been submitted, reviewed for conformance with the specifications, and procured?	16010 Para 1.12; 16050 Para 1.4; and 16400 Para 1.5, as appropriate		
4. Has WESTON FLD 35 been reviewed?			
5. Have all the electrical connection points been coordinated with MCAS as needed?			
6. Has the scope of work been reviewed by all parties?	16010, 16050, and 16400, as appropriate		
7 Have all of the components and wiring connections been reviewed?			
8 Have the number of penetrations for wiring been checked to ensure that there are sufficient number?			
9. Is all work in conformance with NEC, OSHA, and Cal OSHA requirements?			
10. Is the subcontractor on board and have they received the latest design requirements?			
11.			
12.			
13.			
14.			

Identification of Participating Organizations/Personnel

Subcontractor /Personnel _____

WESTON Project QC Engineer _____

WESTON SOLUTIONS			Contract No.: EMAC No. N68711-01-D-6010
Location: Installation Restoration Program (IRP) Site 24, Volatile Organic Compounds (VOCs) Source Area **Project Location:** Former Marine Corps Air Station (MCAS), El Toro, California			**Prep Inspection Date:**
Feature of Work: Startup, Shakedown, and Optimization	**Specifications:** O&M Manual		
Requirements/Reference	**Specification Section**	**QC Initials & Date**	**Remarks**
Preparatory Inspection			
1. Have the health and safety requirements for the employees doing the work been reviewed?	Appendix C SHSP		
2. Have they signed the SHSP Acknowledgement Sheet and have they been provided an orientation on the site?	Appendix C SHSP		
3. Have the submittals for the startup, shakedown, and optimization been submitted, reviewed for conformance with the specifications?			
4. Have the procedures for initial startup, functional test, and start-up procedure been reviewed by all personnel?			
5. Are the qualified personnel on-site (mechanical, electrical, PLC programmer, geologist, engineer, and any other relevant personnel. to perform this task and able to make modifications as needed based on findings?			
6. Are all the components, instrumentation, and equipment installed and properly anchored and wired prior to testing?			
7. Are Final Checklists prepared, reviewed, and approved for this task?			
8.			
9.			
10.			
11.			
12.			
13.			
14.			

Identification of Participating Organizations/Personnel

Subcontractor /Personnel _____

WESTON Project QC Engineer _____

Initial Phase Inspection Checklist

INITIAL PHASE CHECKLIST

SPEC SECTION	DATE

CONTRACT NO	DEFINABLE FEATURE OF WORK	SCHEDULE ACT NO	INDEX #
N68711-01-D-6010 TO 0004			

PERSONNEL PRESENT

GOVERNMENT REP NOTIFIED _____ HOURS IN ADVANCE: YES ☐ NO ☐

NAME	POSITION	COMPANY/GOVERNMENT

PROCEDURE COMPLIANCE

IDENTIFIY FULL COMPLIANCE WITH PROCEDURES IDENTIFIED AT PREPARATORY. COORDINATE PLANS, SPECIFICATIONS, AND SUBMITTALS.

COMMENTS: _____

PRELIMINARY WORK

ENSURE PRELIMINARY WORK IS COMPLETE AND CORRECT. IF NOT, WHAT ACTION IS TAKEN?

WORKMANSHIP

ESTABLISH LEVEL OF WORKMANSHIP

WHERE IS WORK LOCATED? _____

IS SAMPLE PANEL REQUIRED? YES ☐ NO ☐

WILL THE INIITAL WORK BE CONSIDERED AS A SAMPLE? YES ☐ NO ☐

(IF YES, MAINTAIN IN PRESENT CONDITION AS LONG AS POSSIBLE AND DESCRIBE LOCATION OF SAMPLE) _____

RESOLUTION

RESOLVE ANY DIFFERENCES.

COMMENTS: _____

CHECK SAFETY

REVIEW JOB CONDITIONS USING EM 385-1-1 AND JOB HAZARD ANALYSIS

COMMENTS: _____

OTHER

OTHER ITEMS OR REMARKS

QC ENGINEER _____ DATE _____

Task Specific
Initial Phase Inspection Checklists

WESTON SOLUTIONS	Contract No.: EMAC No. N68711-01-D-6010
Location: Installation Restoration Program (IRP) Site 24, Volatile Organic Compounds (VOCs) Source Area **Project Location:** Former Marine Corps Air Station (MCAS), El Toro, California	**Initial Inspection Date:**
Feature of Work: Extraction Well Installation	**Specifications:** Section 02525, Section 11212, and Section 15051

Requirements/Reference	Specification Section	QC Initials & Date	Remarks
Initial Inspection:			
1. Have all the action items and issues been resolved from the Preparatory Inspection Meeting? (Review preparatory meeting minutes.)			
2 Are all the required materials on-site and do they meet the Specifications?	02525 Parts 1 and 2; 11212 Parts 1 and 2 15051 Parts 1 and 2		
3. Is all the equipment on-site and inspected?			
4. Are all required personnel on-site?			
5. Have the work zones been defined and set up in the field?			
6.			
7.			
8.			
9.			
10.			

Identification of Participating Organizations/Personnel

Subcontractor /Personnel _____

WESTON Project QC Engineer _____

WESTON SOLUTIONS			Contract No.: EMAC No. N68711-01-D-6010
Location: Installation Restoration Program (IRP) Site 24, Volatile Organic Compounds (VOCs) Source Area **Project Location:** Former Marine Corps Air Station (MCAS), El Toro, California			**Initial Inspection Date:**
Feature of Work: Trenching	**Specifications:** Section 02222		
Requirements/Reference	**Specification Section**	**QC Initials & Date**	**Remarks**
Initial Inspection:			
1. Have all the action items and issues been resolved from the Preparatory Inspection Meeting? (Review preparatory meeting minutes.)			
2. Is all the equipment on-site and inspected?			
3. Are all required personnel on-site?			
4. Have the work zones been defined and set up in the field?			
5. Are barricades and/or fencing set up as needed?			
6			
7			
8.			
9.			

Identification of Participating Organizations/Personnel

Subcontractor /Personnel _____

WESTON Project QC Engineer _____

WESTON SOLUTIONS	Contract No.: EMAC No. N68711-01-D-6010
Location: Installation Restoration Program (IRP) Site 24, Volatile Organic Compounds (VOCs) Source Area **Project Location:** Former Marine Corps Air Station (MCAS), El Toro, California	**Initial Inspection Date:**
Feature of Work: Piping Installation	**Specifications:** Section 15051 (Vault Piping), Section 15064 (Compound Piping), and Section 15065 (HDPE Piping), as appropriate; also references Section 02222 (regarding Bedding)

Requirements/Reference	Specification Section	QC Initials & Date	Remarks
Initial Inspection:			
1. Have all the action items and issues been resolved from the Preparatory Inspection Meeting? (Review preparatory meeting minutes.)			
2. Is all the equipment on-site and inspected?			
3. Are all required personnel on-site?			
4. Have the work zones been defined and set up in the field?			
5 Are barricades and/or fencing set up as needed?			
6 Have the trenches been inspected prior to installing piping to ensure that they are properly aligned, at the proper grade, and free of rocks and/or sharp objects?			
7. Have the trenches been properly bedded for the piping (sand)?	02222 Para 3.4.4		
8.			
9.			
10.			
11.			
12			

Identification of Participating Organizations/Personnel

Subcontractor /Personnel _____

WESTON Project QC Engineer _____

WESTON SOLUTIONS	Contract No.: EMAC No. N68711-01-D-6010
Location: Installation Restoration Program (IRP) Site 24, Volatile Organic Compounds (VOCs) Source Area **Project Location:** Former Marine Corps Air Station (MCAS), El Toro, California	**Initial Inspection Date:**
Feature of Work: Backfilling and Compaction	**Specifications:** Section 02222

Requirements/Reference	Specification Section	QC Initials & Date	Remarks
Initial Inspection:			
1. Have all the action items and issues been resolved from the Preparatory Inspection Meeting? (Review preparatory meeting minutes.)			
2. Is all the equipment on-site and inspected? Has all the documentation been provided for the nuclear density gage, including calibration information?	02222 Para 1.3		
3. Are all required personnel on-site?			
4 Have the trenches been properly bedded and haunched for the piping (sand)?	02222 Para 3.4		
5 Are in-place soil density tests being performed according to specifications?	02222		
6			
7.			
8.			
9.			

Identification of Participating Organizations/Personnel

Subcontractor /Personnel _____

WESTON Project QC Engineer _____

WESTON SOLUTIONS	Contract No.: EMAC No. N68711-01-D-6010
Location: Installation Restoration Program (IRP) Site 24, Volatile Organic Compounds (VOCs) Source Area **Project Location:** Former Marine Corps Air Station (MCAS), El Toro, California	**Initial Inspection Date:**
Feature of Work: Concrete Work for Pad Installation	**Specifications:** Section 03300 (also references Section 02222)

Requirements/Reference	Specification Section	QC Initials & Date	Remarks
Initial Inspection:			
1. Have all the action items and issues been resolved from the Preparatory Inspection Meeting? (Review preparatory meeting minutes.)			
2 Is all the equipment on-site and inspected?			
3. Are all required personnel on-site?			
4 Is the subgrade excavated and properly compacted?	02222 Para 3.1 and Para 3.5		
5 Is the subgrade level?			
6 Are all material on-site for formwork, etc.	03300 Para 1 3		
7.			
8.			
9.			

Identification of Participating Organizations/Personnel

Subcontractor /Personnel _____

WESTON Project QC Engineer _____

WESTON SOLUTIONS	Contract No.: EMAC No. N68711-01-D-6010
Location: Installation Restoration Program (IRP) Site 24, Volatile Organic Compounds (VOCs) Source Area **Project Location:** Former Marine Corps Air Station (MCAS), El Toro, California	**Initial Inspection Date:**
Feature of Work: Equalization Tank Installation	**Specifications:** Section 11246 (also references Section 03300)

Requirements/Reference	Specification Section	QC Initials & Date	Remarks
Initial Inspection:			
1 Have all the action items and issues been resolved from the Preparatory Inspection Meeting? (Review preparatory meeting minutes.)			
2 Is all the equipment on-site (crane) and inspected?			
3. Are all required personnel on-site?			
4 Is the concrete pad installed and have QC inspections of the pad been completed? Have any QC issues been resolved?	03300		
5 Is the tank on-site and has it been inspected to ensure it matches the associated submittals, and is free of damage?	11246 Para 1 3		
6 Has the mechanism for off-loading (rigging) and installing the tank been discussed?			
7			
8.			
9.			
10.			
11.			
12.			
13.			
14.			

Identification of Participating Organizations/Personnel

Subcontractor /Personnel _____

WESTON Project QC Engineer _____

WESTON SOLUTIONS	Contract No.: EMAC No. N68711-01-D-6010
Location: Installation Restoration Program (IRP) Site 24, Volatile Organic Compounds (VOCs) Source Area **Project Location:** Former Marine Corps Air Station (MCAS), El Toro, California	**Initial Inspection Date:**
Feature of Work: Electrical Work	**Specifications:** Section 16010, Section 16050, and Section 16400 as appropriate

Requirements/Reference	Specification Section	QC Initials & Date	Remarks
Initial Inspection:			
1 Have all the action items and issues been resolved from the Preparatory Inspection Meeting? (Review preparatory meeting minutes.)			
2. Is all the equipment on-site and inspected?			
3. Are all required personnel on-site?			
4. Have all the wiring diagrams and applicable drawings been reviewed by the applicable personnel?			
5. Have all the manufacturer's data information been reviewed for all instrumentation, equipment, etc.?			
6. Is all the material on-site and does it match the approved submittal?	16050 Part 2; 16400 Part 2		
7.			
8.			
9			
10			
11			
12			

Identification of Participating Organizations/Personnel

Subcontractor /Personnel _____

WESTON Project QC Engineer _____

Task Specific
Follow-Up Phase Inspection Checklists

WESTON SOLUTIONS			Contract No.: EMAC No. N68711-01-D-6010
Location: Installation Restoration Program (IRP) Site 24, Volatile Organic Compounds (VOCs) Source Area **Project Location:** Former Marine Corps Air Station (MCAS), El Toro, California			**Follow Up Phase Inspection Date:**
Feature of Work: Extraction Well Installation	**Specifications:** Section 02525, Section 11212, and Section 15051		
Requirements/Reference	**Specification Section**	**QC Initials & Date**	**Remarks**
Follow-Up Phase Inspection			
1 Is equipment being inspected and documented on a daily basis?	Appendix C, SHSP		
2 Is the auger on-site appropriate for the work to be conducted?	02525 Parts 2 and 3		
3 Is the Project Geologist logging the pertinent information			
4 Is the drilling equipment on-site appropriate for the work to be conducted?	02525 Parts 2 and 3		
5 Do all the materials meet the specifications or industry standards?	02525 Parts 2 and 3		
6 Are the well casings Type 316 stainless steel with a 6-inch outer diameter with type 316 continuous wrap well screens with a slot size to maximize open area and retain filter pack?	02525 Parts 2 and 3		
7 Are the screens placed to maximize hydraulic capture and minimize biofouling?	02525 Parts 2 and 3		
8 Are centralizers installed at 20-foot intervals?	02525 Parts 2 and 3		
9. Does the filter pack match formation attributes?	02525 Parts 2 and 3		
10. Is there a minimum of 3 feet of bentonite seal placed above the filter pack?	02525 Parts 2 and 3		
11. Has the well been cement grouted with 5 percent bentonite installed above the bentonite seal to the well vault?	02525 Parts 2 and 3		
12. Has the drilling contractor taken preventive measures to avoid introducing iron bacteria into the wells during drilling?	02525 Parts 2 and 3		
13. Has the well been constructed in accordance with the applicable design drawings and plans?	02525 Parts 2 and 3, 11212 Parts 2 and 3, 15051 Parts 2 and 3		
14. Is the decontamination and purge water water collected and sampled for waste characterization?	02525 Para 3.5		
15. Is the well completion construction in accordance with the applicable requirements?	02525 Parts 2 and 3		

WESTON SOLUTIONS	Contract No.: EMAC No. N68711-01-D-6010
Location: Installation Restoration Program (IRP) Site 24, Volatile Organic Compounds (VOCs) Source Area **Project Location:** Former Marine Corps Air Station (MCAS), El Toro, California	**Follow Up Phase Inspection Date:**
Feature of Work: Extraction Well Installation	**Specifications:** Section 02525, Section 11212, and Section 15051

Requirements/Reference	Specification Section	QC Initials & Date	Remarks
16. Are all wellheads installed below grade within a pre-cast concrete vault?	02525 Parts 2 and 3, 15051 Para 2 12 and 3.3		
17. Does the well vault house wellhead components, such as shutoff valves, pressure gauges, flow meters, power connections, and sampling ports?	15051 Parts 2 and 3		
18. Doe the vaults meet H-20 traffic loading specifications?	15051 Para 3.3		
19. Are the vaults will be clearly labeled and allow for easy assess and maintenance?			
20. Has the well/ been properly labeled and painted?			
21. Has the well been developed in accordance with the specifications? Has the Well Development Log been completed?	02525 Para 3 4		
22. Has the well been surveyed at top of casing and ground (northing, easting, elevation) by a Licensed Surveyor?			
23			
24			
25			
26.			
27.			
28.			
29.			

Identification of Participating Organizations/Personnel

Subcontractor /Personnel _____

WESTON Project QC Engineer _____

WESTON SOLUTIONS			Contract No.: EMAC No. N68711-01-D-6010
Location: Installation Restoration Program (IRP) Site 24, Volatile Organic Compounds (VOCs) Source Area **Project Location:** Former Marine Corps Air Station (MCAS), El Toro, California			**Follow Up Phase Inspection Date:**
Feature of Work: Trenching	**Specifications:** Section 02222		
Requirements/Reference	**Specification Section**	**QC Initials & Date**	**Remarks**
Follow-Up Phase Inspection			
1. Is equipment being inspected and documented on a daily basis?	Appendix C, SHSP		
2. Is the excavation done to the lines and grades indicated on the 100 Percent Remedial Design?	02222 Para 3.1.2 and 3.1.3		
3. Is the general guideline for trench width that be no more than the pipe outer diameter plus 2-feet being followed?	02222 Para 3.1.2 and 3.1.3		
4. Do the trenches have flat and level bottoms made to the grade specified?	02222 Para 3.1.2 and 3.1.3		
5. Is the equipment a hydraulic backhoe or excavator with bucket? Is the equipment capable of excavating at least 3 feet deeper than the maximum design depth shown on the drawings? Are the design depths shown on the 100 percent design drawings followed?	02222 Para 3.1.2 and 3.1.3		
6. Are the trenches to accommodate bends being excavated (if needed) to allow for the natural flexibility capabilities of HDPE pipe? Has the manufacturer's literature for HDPE pipe bending radius been consulted when necessary?			
7. Is the excavated materials that are suitable for backfilling stockpiled at a distance equal to one-half the depth of the excavation, but not closer than 2-feet?	02222 Para 3.1.2 and 3.1.3		
8. Is the surface graded or bermed to prevent surface water from flowing into the trench? If water enters the trench, has it been dewatered it to maintain stability? Are dams and/or cutoffs been constructed to divert water away from the excavation?	02222 Para 3.1.2 and3.1.3		
9. Are underground utilities encountered protected and supported?	02222 Para 3.1.1		
10. Are open trenches barricaded or fenced when left unattended and at the end of each day's work?			
11. Are trench plates being used on the tarmac at the end of the day when the MCAS has scheduled festivities and other entertainment?			

WESTON SOLUTIONS	Contract No.: EMAC No. N68711-01-D-6010
Location: Installation Restoration Program (IRP) Site 24, Volatile Organic Compounds (VOCs) Source Area **Project Location:** Former Marine Corps Air Station (MCAS), El Toro, California	**Follow Up Phase Inspection Date:**
Feature of Work: Trenching	**Specifications:** Section 02222

Requirements/Reference	Specification Section	QC Initials & Date	Remarks
12 Trenching in roadways will have personnel assigned to do traffic control. Personnel will follow WESTON'S FLD 20 for traffic control. If trench is not backfilled at the end of the day, cover the open trench with a trench plate.			
13.			
14.			
15.			
16.			
17.			
18.			
19.			
20.			
21.			
22.			
23.			
24.			
25.			
26.			
27.			
28.			
29.			

Identification of Participating Organizations/Personnel

Subcontractor /Personnel _____

WESTON Project QC Engineer _____

WESTON SOLUTIONS	**Contract No.:** EMAC No. N68711-01-D-6010
Location: Installation Restoration Program (IRP) Site 24, Volatile Organic Compounds (VOCs) Source Area **Project Location:** Former Marine Corps Air Station (MCAS), El Toro, California	**Follow Up Phase Inspection Date:**
Feature of Work: Piping	**Specifications:** Section 15051 (Vault Piping), Section 15064 (Compound Piping), and Section 15065 (HDPE Piping), as appropriate; also references Section 02222 (regarding Bedding and Backfilling)

Requirements/Reference	Specification Section	QC Initials & Date	Remarks
Follow-Up Phase Inspection			
1. Is the equipment being inspected and serviced on a daily basis?	Appendix C, SHSP		
2. Have the manufacturer's/supplier's certification for all materials been received and reviewed for compliance with the specifications?	15051 Para 1.2, 15064 Para 1.3, 15065 Para 1.2		
3. Upon arrival, has the pipes been inspected to ensure it is the correct material? Is the material free of damage and it is acceptable for use?	15051 Part 2, 15064 Part 2, 15065 Part 2		
4. Is the pipe restrained to prevent sudden uncontrolled movement?			
5. Is piping installed per the specifications?	15051 Part 3, 15064 Part 3, 15065 Part 3, 02222 Part 3		
6. Is a blind flange and/or other fittings suitable for the future expansion to extraction wells SGU-36-39 installed at the termination of the main line near extraction well SGU-35?			
7. Are fused sections placed into the trench with mechanical equipment (e.g., cherry picker or other suitable equipment)?			
8. Is each time pipe is lowered into the trench, a "dog tail" section of pipe extended out of the trench for fusion to sections of HDPE pipe?			
9. Is small diameter pipe manhandled into the trench with lowering devices such as ropes and pulleys?			
10. Have accommodations been made for thermal changes? (HDPE will expand in hot weather and contract in cold.)			
11. Has pipe placement provided for some "snaking"?			
12. Has pipe not been pulled to straighten?			
13. Have final tie-ins been performed after an overnight stay in the ditch to cool down to near normal soil conditions?			

WESTON SOLUTIONS	Contract No.: EMAC No. N68711-01-D-6010
Location: Installation Restoration Program (IRP) Site 24, Volatile Organic Compounds (VOCs) Source Area **Project Location:** Former Marine Corps Air Station (MCAS), El Toro, California	**Follow Up Phase Inspection Date:**
Feature of Work: Piping	**Specifications:** Section 15051 (Vault Piping), Section 15064 (Compound Piping), and Section 15065 (HDPE Piping), as appropriate; also references Section 02222 (regarding Bedding and Backfilling)

Requirements/Reference	Specification Section	QC Initials & Date	Remarks
14. Have connections made to valves, rigid pipe, or manholes been supported with solid well-tamped bedding below the joint?			
15. Has metallic warning tape labeled with the pipe contents above the pipes been installed?			
16. Does wellhead piping consist of PVC pipe, fittings, valves, and a flow meter? Is the wellhead piping installed per the specifications?	15051 Parts 2 and 3		
17. Have sufficient length of straight runs been installed upstream and downstream for the flow meter? (See the flow meter installation instructions to verify straight runs needed.)			
18. Have manifolds been installed at the wellheads and have the final connections been made?	15051 Part 3		
19. Is backfilling and compaction coordinated with the pipe installation?	02222 Para 3.5 and 3.6		
20			
21			
22			
23			
24			

Identification of Participating Organizations/Personnel

Subcontractor /Personnel _____

WESTON Project QC Engineer _____

WESTON SOLUTIONS			Contract No.: EMAC No. N68711-01-D-6010
Location: Installation Restoration Program (IRP) Site 24, Volatile Organic Compounds (VOCs) Source Area **Project Location:** Former Marine Corps Air Station (MCAS), El Toro, California			**Follow Up Phase Inspection Date:**
Feature of Work: Pipe Testing	**Specifications:** Section 15050		
Requirements/Reference	**Specification Section**	**QC Initials & Date**	**Remarks**
Follow-Up Phase Inspection			
1. Are heat-fused joints properly cooled before pressure testing?	15050 Part 3		
2. Is water at the ambient temperature being used to test the sections?	15050 Part 3		
3. Are the pipe and water at the same temperature (ambient) prior to testing?	15050 Part 3		
4. Is the test pressure limited by valves or other lower pressure rated components? (Check manufacturer's data information. They may be removed or isolated from the test section.)	15050 Part 3		
5. Is the pipe test at no more than 1 ½ times the design operating pressure? (Check manufacturer's data information.)	15050 Para 3.2.1		
6. Does the pipe test consist of initial expansion and test phases? For the initial expansion phase, is make up water added as required to maintain the test pressure for three hours? For the test phase, is the test pressure is reduced by 10 pounds per square inch (psi)? If the pressure remains steady (within 5 percent of the target value) for an hour?	15050 Part 3		
7 Does the total test time including initial pressurization, initial expansion, and time at test pressure not exceed 8 hours?	15050 Part 3		
8 If a test section fails, has the section been depressurized and allowed to "relax" for at least eight (8) hours before bringing the test section up to test pressure again?	15050 Part 3		
9 For the wellhead piping, are leak tests performed after manifolds are built? Re the manifolds pressurized to 1½ times the design pressure at the manifolds? Is the pressure maintained for one hour?	15050 Part 3		
10 If there are any deficiencies and/or failures, have they been corrected and has the test been repeated?	15050 Part 3		
11. Have all tests, test pressures, durations, and results been documented?	15050 Para 3.6		
12.			
13.			
14.			
15.			

WESTON			Contract No.: EMAC No. N68711-01-D-6010
Location: Installation Restoration Program (IRP) Site 24, Volatile Organic Compounds (VOCs) Source Area **Project Location:** Former Marine Corps Air Station (MCAS), El Toro, California			**Follow Up Phase Inspection Date:**
Feature of Work: Pipe Testing	**Specifications:** Section 15050		
Requirements/Reference	**Specification Section**	**QC Initials & Date**	**Remarks**
16.			
17.			
18.			
19.			

Identification of Participating Organizations/Personnel

Subcontractor /Personnel _____

WESTON Project QC Engineer _____

WESTON SOLUTIONS			Contract No.: EMAC No. N68711-01-D-6010
Location: Installation Restoration Program (IRP) Site 24, Volatile Organic Compounds (VOCs) Source Area **Project Location:** Former Marine Corps Air Station (MCAS), El Toro, California			**Follow Up Phase Inspection Date:**
Feature of Work: Backfilling and Compaction	**Specifications:** Section 02222		
Requirements/Reference	**Specification Section**	**QC Initials & Date**	**Remarks**
Follow-Up Phase Inspection			
1 Is the initial backfill material placed in lifts and tamped?	02222 Part 3		
2. Is the initial lift material 6 to 12 inches above the top of the pipe?	02222 Part 3		
3. After the initial lift material is placed, are the subsequent lifts of the required thickness?	02222 Part 3		
4. Is the material compacted in accordance with the specifications?	02222 Part 3		
5. Is compaction testing being tested at the required frequencies?	02222 Para 3.6		
6 Is the correct proctor curve being used for the material being tested?	02222 Para 3.6		
7 Is sufficient water being added to the backfill material for proper compaction?			
8. If the compaction test does not meet the specifications, is the area scarified, wetted (if necessary), re-compacted and re-tested? Is this conducted until the section meets the density requirements?			
9. Is the area properly graded to match surrounding grade?			
10.			
11.			
12			
13			
14.			
15.			

Identification of Participating Organizations/Personnel

Subcontractor /Personnel _____

WESTON Project QC Engineer _____

WESTON SOLUTIONS			Contract No.: EMAC No. N68711-01-D-6010
Location: Installation Restoration Program (IRP) Site 24, Volatile Organic Compounds (VOCs) Source Area **Project Location:** Former Marine Corps Air Station (MCAS), El Toro, California			**Follow Up Phase Inspection Date:**
Feature of Work: Extraction Pump Installation	**Specifications:** Section 11212		
Requirements/Reference	**Specification Section**	**QC Initials & Date**	**Remarks**
Follow-Up Phase Inspection			
1. Are the 35 of the 39 Grundfos stainless steel pumps with Baldor submersible motors, or on-site and ready to be installed at each well?	11212 Parts 1 and 2		
2. Have the manufacturer's installation instructions and the specifications been reviewed?	11212 Part 2		
3. Before pumps are installed, have the pump identification tag been cross-checked with the well number? (Pumps are assigned to particular wells. No substitution or interchange is allowed.)			
4. For each extraction well, has the pump placement depth been reviewed for conformance with the 100 Percent Remedial Design?			
5. Have the required pipe lengths, sounding tube, electrical cable, pump support cable, and the top-of-well flanges to the wellhead been moved as necessary?			
6. Have the pumps to the discharge pipe been connected at a convenient length for installation?			
7. Has the subcontracted electrician or other qualified electrician, secured electrical connections to the motor with the cable supplied by the pump manufacturer? Has the connection been sealed with the supplied electrical sealant?			
8. Has the pump support cable (¼ - inch SS) been secured to the pump?			
9. Has the cable been secured to the discharge pipe with tie-wraps or other approved device?			
10. Is heavy equipment (such as a drill rig) being used to lower the pump, motor, discharge pipe, and cable into the well? Has pipe and cable been added as needed in order to place pump and motor at the required depth? Has the sounding tube been installed as convenient for the installation crew?			
11. Has WESTON ensured that total length of pump plus discharge pipe is at the depth shown on the 100 percent design drawings?			

WESTON SOLUTIONS			Contract No.: EMAC No. N68711-01-D-6010
Location: Installation Restoration Program (IRP) Site 24, Volatile Organic Compounds (VOCs) Source Area **Project Location:** Former Marine Corps Air Station (MCAS), El Toro, California			**Follow Up Phase Inspection Date:**
Feature of Work: Extraction Pump Installation	**Specifications:** Section 11212		
Requirements/Reference	**Specification Section**	**QC Initials & Date**	**Remarks**
12. Have the SS flanges been secured to the discharge pipe, SS support cable, and sounding tube?			
13.			
14.			
15.			
16.			
17.			
18.			
19.			
20.			

Identification of Participating Organizations/Personnel

Subcontractor /Personnel _____

WESTON Project QC Engineer _____

WESTON SOLUTIONS			Contract No.: EMAC No. N68711-01-D-6010
Location: Installation Restoration Program (IRP) Site 24, Volatile Organic Compounds (VOCs) Source Area **Project Location:** Former Marine Corps Air Station (MCAS), El Toro, California			**Follow Up Phase Inspection Date:**
Feature of Work: Concrete Work for Pad Installation	**Specifications:** Section 02222, Section 15050, and Section 03300		
Requirements/Reference	**Specification Section**	**QC Initials & Date**	**Remarks**
Follow-Up Phase Inspection			
1 Has the area been previously surveyed and lines established lines for cut, fill, placement, and grade. Is the area properly located and prepared?			
2 Is the subgrade properly graded, compacted and level? Has the inspection been documented as acceptable?	02222 Part 3		
3. Have all the pipes been leak tested and stub-ups installed? Have the pipes been extended beyond the outside of the compound?	15050 Part 3		
4. Have the conduits been installed that will penetrate the floors? Has the raceway been extended beyond the outside of the compound?			
5. Has the formwork been installed, braced, and tied. Has the formwork been braced and tied to prevent movement during the concrete pour?	03300 Para 3.1 and 3.2		
6. Has the reinforcing steel been installed, supported, and tied? (Do not place steel directly onto the soil Use pre-cast concrete blocks to support steel.)	03300 Para 3.3		
7. Is the steel installed such that it will not touch formwork?			
8. If required, have cast-in-place bolts been installed as shown on the 100 percent design drawings?			
9. Has the steel and formwork been inspected for conformance to the Plans and Specifications. Document the inspection?			
10 Has the concrete mix been reviewed for conformance to the specified mix-design? Document the verification.	03300 Para 3.4		
11 Has all debris, water, and dirt been removed from the forms before the pour?	03300 Para 3.5		
12 Upon delivery of concrete, has it been ensured that measuring, batching, mixing, and transportation of concrete conforms to the requirements?	03300 Para 3.4		
13. Has the concrete been placed continuously and as near as possible to its final position?	03300 Para 3.5		
14. Has the concrete been placed and compacted with high-frequency mechanical vibrators?	03300 Para 3.5.2		

WESTON SOLUTIONS	Contract No.: EMAC No. N68711-01-D-6010
Location: Installation Restoration Program (IRP) Site 24, Volatile Organic Compounds (VOCs) Source Area **Project Location:** Former Marine Corps Air Station (MCAS), El Toro, California	**Follow Up Phase Inspection Date:**
Feature of Work: Concrete Work for Pad Installation	**Specifications:** Section 02222, Section 15050, and Section 03300

Requirements/Reference	Specification Section	QC Initials & Date	Remarks
15 Have the floors been pitched to the low points, sumps, or drains?	03300 Para 3.7		
16 Have the surfaces been screed and floated as required?	03300 Para 3.7		
17 Has the concrete been finished as required and is the workmanship acceptable?.	03300 Para 3.7		
18 During the pour, have all quality control tests been performed and documented as listed in the Plans and Specifications (e.g , slump, air content, compressive strength).	03300 Para 3 9		
19 Is the concrete work protected from the elements and defacement?	03300 Para 3.8		
20 Has the curing method been applied as required?	03300 Para 3.8		
21 Has the curing method been inspected frequently to ensure compliance with the requirements? Document the inspections.	03300 Para 3 8		
22			
23			
24			
25			

Identification of Participating Organizations/Personnel

Subcontractor /Personnel _____

WESTON Project QC Engineer _____

WESTON SOLUTIONS			Contract No.: EMAC No. N68711-01-D-6010
Location: Installation Restoration Program (IRP) Site 24, Volatile Organic Compounds (VOCs) Source Area **Project Location:** Former Marine Corps Air Station (MCAS), El Toro, California			**Follow Up Phase Inspection Date:**
Feature of Work: Equalization Tank Installation	**Specifications:** Section 11246		
Requirements/Reference	**Specification Section**	**QC Initials & Date**	**Remarks**
Follow-Up Phase Inspection			
1. Are all OSHA and Cal-OSHA regulations being followed for rigging and operation of the crane used for placing the tank?			
2. Has WESTON's FLD 23 been reviewed and being followed during crane operations?			
3. Does the tank capacity meet the requirements provided in the 100 percent design?			
4. Have the Manufacturer's installation instructions been reviewed and being followed?	11246 Para 3.1		
5. Is the crane, crane operator, and rigging be scheduled to arrive at the compound when the tank is delivered?			
6. Has the tank been inspected for defects, damage, and conformance to the specifications of the 100 percent design? Document the inspection.	11246 Part 2 and Para 3.2		
7. Is the tank off-loaded directly from the delivery truck by the crane with rigging?	11246 Para 3.1		
8. Did the crane set the equalization tank at the anchoring locations?	11246 Para 3.1		
9. Has WESTON verified that the tank has been set in the proper location (onto cast-in-place bolts or onto the location for Hilti-type bolt installation)?	11246 Para 3.1		
10. Have the mechanical connections been made to influent and effluent pipe?	11246 Para 3.1		
11. Has a leak test been performed on the tank and associated pipe? Document the test.	11246 Para 3.2		
12. Has the tank been anchored into the final position?	11246 Para 3.1		
13. Have the level sensors and controls been installed?	11246 Para 3.1		
14.			
15.			
16.			
17.			
18.			
19.			

WESTON SOLUTIONS			Contract No.: EMAC No. N68711-01-D-6010
Location: Installation Restoration Program (IRP) Site 24, Volatile Organic Compounds (VOCs) Source Area **Project Location:** Former Marine Corps Air Station (MCAS), El Toro, California			**Follow Up Phase Inspection Date:**
Feature of Work: Equalization Tank Installation	**Specifications:** Section 11246		
Requirements/Reference	**Specification Section**	**QC Initials & Date**	**Remarks**
20.			
21.			
22.			

Identification of Participating Organizations/Personnel

Subcontractor /Personnel _____

WESTON Project QC Engineer _____

WESTON SOLUTIONS	Contract No.: EMAC No. N68711-01-D-6010
Location: Installation Restoration Program (IRP) Site 24, Volatile Organic Compounds (VOCs) Source Area **Project Location:** Former Marine Corps Air Station (MCAS), El Toro, California	**Follow Up Phase Inspection Date:**
Feature of Work: Electrical Work	**Specifications:** Section 16010, Section 16050, Section 16400, Section 1734 and Section 1735 (also references 02222 Bedding and Backfilling)

Requirements/Reference	Specification Section	QC Initials & Date	Remarks
Follow-Up Phase Inspection			
1 Is Underwriters Laboratory-approved lubricant being used for wire pulling?			
2. Are separate conduits for power and controls being used? Are conduits spaced according to the 100 percent design?			
3. Are AC and DC conductors installed in separate conduits, or as allowed in the NEC?			
4 Are all instruments and equipment grounded according manufacturer's recommendations and the NEC?			
5. Are all buried conductors and conduit identified with metallic warning tape that is at least 12-inches above the conduit?	02222 Para 2.5 and 3.3		
6. Is haunching or initial backfill material used around underground conduits as shown on the 100 percent design?	02222 Parts 2 and 3		
7 Are all wires, cables, and each conductor identified at each end with wire and cable markers?			
8 Is the wire color code or coded electrical tape system being used as identified in the 100 percent design?	16050 Para 3.3		
9. Are panelboards mounted as required? Are the loads distributed equally between the phase busses? Are the circuit directories installed in each panelboard? Are they marked and labeled per NEC?			
10. Has it been ensured that splices are not used in manholes or other below grade located boxes, unless specifically shown in the 100 percent design?			
11 Are terminations for power conductors, control conductors, and instrumentation and signal conductors made according to the 100 percent design?			
12. Are raceways and conduits used as required in the 100 percent design?			
13. Are terminal blocks used for all instrumentation cable junctions? Is each circuit identified at the junction?			

WESTON SOLUTIONS	Contract No.: EMAC No. N68711-01-D-6010
Location: Installation Restoration Program (IRP) Site 24, Volatile Organic Compounds (VOCs) Source Area **Project Location:** Former Marine Corps Air Station (MCAS), El Toro, California	**Follow Up Phase Inspection Date:**
Feature of Work: Electrical Work	**Specifications:** Section 16010, Section 16050, Section 16400, Section 1734 and Section 1735 (also references 02222 Bedding and Backfilling)

Requirements/Reference	Specification Section	QC Initials & Date	Remarks
14. Has it been ensured that shielded instrumentation wire, coaxial, data highway, and fiber optic cables in runs between instruments, terminal boxes, or panels are not spliced?			
15. Have all circuits been tested as required? Document test results.	16010 Para 1.23		
16			
17.			
18.			
19			
20.			
21.			
22			

Identification of Participating Organizations/Personnel

Subcontractor /Personnel _____

WESTON Project QC Engineer _____

WESTON SOLUTIONS			Contract No.: EMAC No. N68711-01-D-6010
Location: Installation Restoration Program (IRP) Site 24, Volatile Organic Compounds (VOCs) Source Area **Project Location:** Former Marine Corps Air Station (MCAS), El Toro, California			**Follow Up Phase Inspection Date:**
Feature of Work: Post Construction Survey	**Specifications:**		
Requirements/Reference	**Specification Section**	**QC Initials & Date**	**Remarks**
Follow-Up Phase Inspection			
1 A qualified land surveyor registered in the State of California been procured to perform the survey and stamp the report?			
2. Has the Surveyor been briefed of the SHSP plan applicable sections and have personnel signed the Acknowledgement Form?	Appendix C SHSP		
3. Is the selected surveying company as established company who has performed previous surveys at the MCAS El Toro?			
4. Have all the requirements in the 100 percent design been followed for this work?			
5. Has the surveyor surveyed the horizontal and vertical positions of all installed wells, including the top of casing?			
6 Has the piping network been surveyed?			
7. Survey the two power service locations.			
8. Has the installed compound been surveyed?			
9. Has the mechanical connection point between the modified IDP and the SGU extraction system been surveyed.			
10 Has the surveyor submitted the final report and a drawing in CADD 2000 format to WESTON?			
11			
12			

Identification of Participating Organizations/Personnel

Subcontractor /Personnel _____

WESTON Project QC Engineer _____

WESTON SOLUTIONS			Contract No.: EMAC No. N68711-01-D-6010
Location: Installation Restoration Program (IRP) Site 24, Volatile Organic Compounds (VOCs) Source Area **Project Location:** Former Marine Corps Air Station (MCAS), El Toro, California			**Follow Up Phase Inspection Date:**
Feature of Work: Demobilization and Site Restoration	**Specifications:**		
Requirements/Reference	**Specification Section**	**QC Initials & Date**	**Remarks**
Follow-Up Phase Inspection			
Demobilization			
1. Have the construction sites been cleaned (wells, compound, electrical, and piping network areas) of debris, trash, and hazardous waste?			
2. Have any personnel for other duties who have completed their tasks been released?			
3. Has all equipment been transported back to the vendor or to point of origin?			
4. Have the utility companies been contacted and schedule termination of services to the temporary office?			
5 Has the office equipment to rental companies or WESTON facilities been returned?			
6. Have the sanitary facilities been returned to vendors?			
7. Has the site been inspected and ensured that the disturbed areas have been graded to match the existing surface contours?			
8. Has the temporary office been returned to vendor?			
9. Has WESTON met with the client for final inspection of construction site?			
10. Have the remaining personnel been released for travel back to their place of origin?			
Site restoration			
11. Have all construction debris and the WESTON decontamination area been removed and disposed of?			
12. Has all of the trash and hazardous waste been removed and disposed of?			
13. Has the ground surface been restored and graded to match surrounding surface contours?			
14 Has the asphalt been replaced along major road crossings (e.g., Perimeter Road)?			
15 Have area with replaced pavement been slurried to grade, as required?			
16.			
17.			

WESTON SOLUTIONS	Contract No.: EMAC No. N68711-01-D-6010
Location: Installation Restoration Program (IRP) Site 24, Volatile Organic Compounds (VOCs) Source Area **Project Location:** Former Marine Corps Air Station (MCAS), El Toro, California	**Follow Up Phase Inspection Date:**
Feature of Work: Demobilization and Site Restoration	**Specifications:**

Requirements/Reference	Specification Section	QC Initials & Date	Remarks
18.			
19.			
20			
21			
22.			

Identification of Participating Organizations/Personnel

Subcontractor /Personnel _____

WESTON Project QC Engineer _____

Rework Items List

REWORK ITEMS LIST

(ATTACH ADDITIONAL SHEETS IF NECESSARY)

CONTRACT No:	N6871-01-D-6010	CONTRACT TITLE Shallow Groundwater Unit. IRP 24 Former Marine Corps Air Station El Toro. CA
Contractor:	Weston Solutions, Inc. 1575 Treat Blvd #212 Walnut Creek, CA 94598 (925) 948-2600	

REWORK ITEMS IDENTIFIED		REWORK ITEMS CORRECTED	
Identifier /Date	Description of Item to be reworked and Date to be corrected	Date Corrected	Description of Corrected Item

REWORK ITEMS LIST
(ATTACH ADDITIONAL SHEETS IF NECESSARY)

CONTRACT No: N6871-01-D-6010		CONTRACT TITLE Shallow Groundwater Unit IRP 24 Former Marine Corps Air Station El Toro, CA	
Contractor: Weston Solutions, Inc. 1575 Treat Blvd #212 Walnut Creek, CA 94598 (925) 948-2600			
REWORK ITEMS IDENTIFIED		REWORK ITEMS CORRECTED	
Identifier /Date	Description of Item to be reworked and Date to be corrected	Date Corrected	Description of Corrected Item

ATTACHMENT F

Daily Production Report
&
Daily Quality Control Report

DAILY PRODUCTION REPORT

(ATTACH ADDITIONAL SHEETS IF NECESSARY)

CONTRACT NO N68711-01-D-6010 TO 0004	TITLE AND LOCATION SGU IRP 24, Former MCAS at El Toro, CA	DATE REPORT NO
CONTRACTOR Weston Solutions Inc 1575 Treat Blvd #212 Walnut Creek CA 94598	SUPERINTENDENT	

AM WEATHER	PM WEATHER	MAX TEMP (F)	MIN TEMP (F)

WORK PERFORMED TODAY

Schedule Activity No.	WORK LOCATION AND DESCRIPTION	EMPLOYER	NUMBER	TRADE	HRS

JOB SAFETY				
WAS A JOB SAFETY MEETING HELD THIS DATE? (If YES attach copy of the meeting minutes)	☐ YES	☐ NO	TOTAL WORK HOURS ON JOB SITE THIS DATE, INCL CON'T SHEETS	
WERE THERE ANY LOST TIME ACCIDENTS THIS DATE? (If YES attach copy of completed OSHA report)	☐ YES	☐ NO	CUMULATIVE TOTAL OF WORK HOURS FROM PREVIOUS REPORT	
WAS CRANE/MANLIFT/TRENCHING/SCAFFOLD/HV ELEC/HIGH WORK/ HAZMAT WORK DONE? (If YES attach statement or checklist showing inspection performed)	☐ YES	☐ NO	TOTAL WORK HOURS FROM START OF CONSTRUCTION	
WAS HAZARDOUS MATERIAL/WASTE RELEASED INTO THE ENVIRONMENT? (If YES attach description of incident and proposed action.)	☐ YES	☐ NO		

Schedule Activity No.	LIST SAFETY ACTIONS TAKEN TODAY/SAFETY INSPECTIONS CONDUCTED	☐ SAFETY REQUIREMENTS HAVE BEEN MET

EQUIPMENT/MATERIAL RECEIVED TODAY TO BE INCORPORATED IN JOB (INDICATE SCHEDULE ACTIVITY NUMBER)

Schedule Activity No.	Submittal #	Description of Equipment/Material Received

CONSTRUCTION AND PLANT EQUIPMENT ON JOB SITE TODAY. INDICATE HOURS USED AND SCHEDULE ACTIVITY NUMBER

Schedule Activity No.	Owner	Description of Construction Equipment Used Today (incl Make and Model)	Hours Used

Schedule Activity No.	REMARKS

CONTRACTOR/SUPERINTENDENT DATE

4296/1 (9/98)

DAILY QUALITY CONTROL REPORT

(ATTACH ADDITIONAL SHEETS IF NECESSARY)

DATE

REPORT NO

PHASE | CONTRACT NO N68711-01-D-6010 TO 0004 | CONTRACT TITLE SGU IRP 24 Former MCAS at El Toro CA

PREPARATORY

WAS PREPARATORY PHASE WORK PREFORMED TODAY? YES ☐ NO ☐

IF YES, FILL OUT AND ATTACH SUPPLEMENTAL PREPARATORY PHASE CHECKLIST.

Schedule Activity No.	Definable Feature of Work	Index #

INITIAL

WAS INITIAL PHASE WORK PREFORMED TODAY? YES ☐ NO ☐

IF YES, FILL OUT AND ATTACH SUPPLEMENTAL INITIAL PHASE CHECKLIST.

Schedule Activity No.	Definable Feature of Work	Index #

FOLLOW-UP

WORK COMPLIES WITH CONTRACT AS APPROVED DURING INITIAL PHASE? YES ☐ NO ☐

WORK COMPLIES WITH SAFETY REQUIREMENTS? YES ☐ NO ☐

Schedule Activity No.	Description of Work, Testing Performed & By Whom, Definable Feature of Work Specification Section, Location and List of Personnel Present

REWORK ITEMS IDENTIFIED TODAY (NOT CORRECTED BY CLOSE OF BUSINESS)

Schedule Activity No.	Description

REWORK ITEMS CORRECTED TODAY (FROM REWORK ITEMS LIST)

Schedule Activity No.	Description

REMARKS (Also Explain Any Follow-Up Phase Checklist Item From Above That Was Answered "NO"). Manuf Rep On-Site etc

Schedule Activity No.	Description

On behalf of the contractor, I certify that this report is complete and correct and equipment and material used and work performed during this reporting period is in compliance with the contract drawings and specifications to the best of my knowledge except as noted in this report.

AUTHORIZED QC ENGINEER AT SITE DATE

GOVERNMENT QUALITY ASSURANCE REPORT

DATE

QUALITY ASSURANCE REPRESENTATIVE'S REMARKS AND/OR EXCEPTIONS TO THE REPORT

Schedule Activity No.	Description

GOVERNMENT QUALITY ASSURANCE MANAGER DATE

ATTACHMENT G

Project Quality Control/Quality Assurance Audit Checklist

Weston Solutions, Inc

Project Quality Control/Quality Assurance Plan Audit Check List

Contract No:	**N68711-01-D-6010/Task Order 0004**
CLIENT:	Southwest Division Naval Facilities Engineering Command, San Diego, California
PROJECT TITLE/DESCRIPTION:	Shallow Groundwater Unit Remedial Action, IRP Site 24, El Toro, California
LOCATION:	IRP Site 24 at Former Marine Corps Air Station at El Toro, California
PROJECT DIRECTOR:	
PROJECT MANAGER:	Tracy Walker
AUDIT CHECKLIST COMPLETED BY:	
DATED COMPLETED:	**FILE NO.:**

PROJECT QC/QA PLAN:	**YES**		**NO**		**Comments**
Plan available:					
Plan reviewed and approved:					
Review and approval signatures provided:					
All components provided:					
Title page with provision for approval signatures:					
Table of contents:					
Entity organization and responsibilities:					
WESTON/subcontractor:					
Client/representatives:					
Description of entity activities:					
QC/QA objectives:					
QC/QA procedures:					
Documentation:					
Document control:					
Audits:					
Corrective Action:					
QC/QA reports to management:					
Findings:					

IMPLEMENTATION OF PROJECT QC/QA PLAN:
For each project task evaluate if QC/QA objectives and procedures are being implemented Complete Table D.

TABLE D EVALUATION OF IMPLEMENTATION OF QC/QA OBJECTIVES/PROCEDURES			
PROJECT TASK	**QC/QA OBJECTIVES**	**QC/QA PROCEDURES**	**COMMENTS ON IMPLEMENTATION**
DOCUMENTATION			
DOCUMENT CONTROL			
AUDITS			
CORRECTIVE ACTION			
QC/QA REPORTS TO MANAGEMENT			
FINDINGS			

Final

APPENDIX I
Contingency Plan
Shallow Groundwater Unit Remedial Action
Installation Restoration Program Site 24
Volatile Organic Compounds Source Area

FORMER MARINE CORPS AIR STATION
EL TORO, CALIFORNIA

December 2004

Prepared for:
Base Realignment and Closure
Naval Facilities Engineering Command
San Diego, California

Prepared by:
Weston Solutions, Inc.
1575 Treat Blvd, Suite 212
Walnut Creek, California

Prepared under:
Environmental Multiple Award
Contract Number N68711-01-D-6010
Contract Task Order 0004

TABLE OF CONTENTS

1. INTRODUCTION 1-1

1.1 PROJECT DESCRIPTION 1-2

1.2 PURPOSE AND SCOPE OF CP 1-2

2. IMPLEMENTATION 2-1

2.1 ROLES AND RESPONSIBILITIES 2-1

2.1.1 NFECSW SDIEGO Team 2-1

2.1.2 Base Closure Team 2-3

2.1.3 Remedial Design and Oversight Contractor 2-3

2.1.4 Remedial Design/Remedial Action Contractor 2-4

2.2 EMERGENCY RESPONSE TRAINING 2-5

2.3 EMERGENCY RESPONSE DRILLS 2-6

2.4 COMMUNICATION 2-6

3. EMERGENCY RESPONSE PROCEDURES 3-1

3.1 PRE-EMERGENCY PLANNING 3-1

3.2 POTENTIAL HAZARD OR INCIDENT IDENTIFICATION 3-1

3.3 HAZARD IDENTIFICATION 3-3

3.3.1 Trench Collapse During Construction 3-3

3.3.2 Damage to Underground Utilities 3-4

3.3.3 Compressed Gas Cylinders 3-4

3.3.4 Buried Items 3-4

3.3.5 Electrical Hazards 3-8

3.3.6 Construction Hazards Related to Use of Heavy Equipment 3-8

3.3.7 Conveyance Piping Breakage/Joint Failure or Blockage 3-8

3.3.8 Equalization Tank Vent 3-8

3.3.9 Fire/Explosion 3-9

3.3.10 Flash Flood 3-9

3.3.11 Earthquake 3-9

3.4 RESPONSE PROCEDURES 3-9

3.4.1 Hazard or Incident Detection 3-9

3.4.2 Site Security 3-10

3.4.3 Response to Personnel Injury 3-10

3.4.4 Environmental Releases 3-11

3.4.4.1 Prevention of Environmental Releases 3-11

3.4.4.2 Response to Environmental Releases 3-11

3.4.4.3 Reporting of Environmental Releases 3-12

3.4.5 Fire/Explosion Hazards 3-12

3.4.5.1 Prevention of Fire/Explosion 3-13

TABLE OF CONTENTS

3.4.5.2 Response to Fire/Explosion 3-13
3.4.5.3 Reporting Fire/Explosion 3-14
3.4.6 Flash Flooding 3-14
3.4.6.1 Response to Flash Flood Conditions 3-15
3.4.6.2 Reporting Flash Flooding 3-15
3.4.7 Earthquake 3-16
3.4.7.1 Hazard Mitigation 3-16
3.4.7.2 Response to Earthquake 3-16
3.4.7.3 Reporting Earthquake Damage 3-17
3.4.8 Waste Disposal 3-17

4. EMERGENCY RESPONSE EQUIPMENT 4-1

4.1 ON-SITE EQUIPMENT AND SUPPLIES 4-1

4.2 OFF SITE EQUIPMENT AND SERVICES 4-1

5. SUPPLEMENTAL PROCEDURES 5-1

5.1 AIR MONITORING PLAN 5-1
5.1.1 Personnel Monitoring 5-1
5.1.2 Construction Monitoring 5-1
5.1.3 Emergency Incident Monitoring 5-1
5.1.4 Emergency Action Limits 5-2

6. REFERENCES 6-1

FIGURES

Figure 2-1 Project Organization Chart

TABLES

Table 3-1 Preliminary Emergency Contact List

Table 3-2 How to Recognize Unexploded Ordnance

ACRONYMS AND ABBREVIATIONS

BCT	Base Realignment and Closure Cleanup Team
BEC	Base Realignment and Closure Environmental Coordinator
BRAC	Base Realignment and Closure
Cal-EPA	California Environmental Protection Agency
CLEAN	Comprehensive Long-Term Environmental Action Navy
CO	Contracting Officer
CP	Contingency Plan
CPR	cardiopulmonary resuscitation
CQC	construction quality control
CTO	Contract Task Order
DTSC	Department of Toxic Substances Control
EAS	emergency assembly site
EPA	Environmental Protection Agency, United States
ERC	Emergency Response Coordinator
ERM	Emergency Response Manager
GAC	granulated activated carbon
HAZMAT	hazardous material
IDP	Irvine Desalter Project
IRP	Installation Restoration Program
LEL	lower explosive limit
MCAS	Marine Corps Air Station
NFECSW SDIEGO	Southwest Division, Naval Facilities Engineering Command, San Diego
OU	Operable Unit
PACNAVFACENGCO	Pacific Division, Naval Facilities Engineering Command
PM	Project Manager
PPE	personal protective equipment
QA	quality assurance
QAO	Quality Assurance Officer

ACRONYMS AND ABBREVIATIONS

RA	remedial action
RAC	Remedial Action Contractor
RDW	remediation derived waste
ROD	Record of Decision
ROICC	Resident Officer in Charge of Construction
RPM	Remedial Project Manager
RWQCB	Regional Water Quality Control Board, San Diego
SGU	Shallow Groundwater Unit
SHSO	Site Health and Safety Officer
SHSP	Site Health and Safety Plan
UXO	unexploded ordnance
VOC	volatile organic compound
WESTON	Weston Solutions, Inc

1. INTRODUCTION

This contingency plan (CP) has been prepared in support of remedial action (RA) of the shallow groundwater unit (SGU) at Operable Unit (OU) 2A, Site 24, the Volatile Organic Compound (VOC) Source Area, at the former Marine Corps Air Station (MCAS) El Toro. The purpose of the CP is to provide procedures required to protect the local population and the environment in the event of an accident or emergency during the construction phase of the remedial action (RA).

Other documents being prepared in support of this remedial effort are:

- Remedial Design Report.
- Construction Quality Control (CQC) Plan.

Groundwater pump and treat has been selected as the preferred RA in the final *Record of Decision (ROD) for Operable Unit (OU) 2A, Site 24-VOC Source Area* (DON, 2002). This selected remedy will include the following components:

- Groundwater extraction and treatment.
- Institutional controls.
- Integration with the modified Irvine Desalter Project (modified IDP).

Extracted groundwater will be treated at the modified Irvine Desalter Project (IDP) facility to remove VOCs using air stripping and activated carbon adsorption (DON, 2002). The modified IDP is a proposed water supply development project initiated by the Orange County Water District and the Irvine Ranch Water District.

This CP was prepared for Southwest Division, Naval Facilities Engineering Command (NFECSW SDIEGO) under contract task order (CTO) No. 0004 of the Environmental Multiple Award Contract (EMAC) No. N68711-01-D-6010.

1.1 PROJECT DESCRIPTION

Installation Restoration Program (IRP) Site 24 comprises two media: soil and groundwater. In the past, VOC contamination migrated from the soil at IRP Site 24 to the SGU and subsequently to the principal aquifer, which resides mainly outside (downgradient of) the base boundary and is referred to as OU 1-Site 18, Regional VOC Groundwater Plume. Contaminated soil at IRP Site 24 was addressed previously using soil vapor extraction as the remedy for the removal of VOC contamination and a closure report has been submitted to the Base Realignment and Closure (BRAC) Cleanup Team (BCT). The proposed RA for the groundwater at IRP Sites 18 and 24 is extraction, conveyance, treatment, and institutional controls (DON, 2002).

1.2 PURPOSE AND SCOPE OF CP

This CP identifies potential emergencies that may occur during the construction phase of the RA for the groundwater in the SGU at IRP Site 24, presents procedures for preventing accidents and emergencies, provides mechanisms for minimizing risk and damage, and develops response actions for each potential emergency. This CP supplements and complements the site-specific Health and Safety Plan (SHSP) and other related plans, and the technical specifications that will be in place for the RA. After the remedy is in place, monitoring and maintenance of the well field will be implemented in accordance with the post-closure operation and maintenance plan.

Although the selected remedy also involves groundwater in the principal aquifer at IRP Site 18, this CP addresses only those potential emergencies that would arise due to the implementation of the IRP Site 24 SGU RA.

The remedy involves the following activities:

- Pre-mobilization activities and site preparation, including geophysical surveys and geotechnical investigation.
- Groundwater extraction well network installation, and wellhead and manifold construction.
- Conveyance piping installation including trenching, pipe installation, backfill and resurfacing, and appropriate connection to the modified IDP system.

- Electrical connection.
- Installation of site features including fencing, signs, and gates with locks.
- Other site operations such as traffic control and health and safety compliance.
- Remediation-derived waste (RDW) handling.

The actions that this CP covers terminate upon connection to the modified IDP piping and electrical network.

It is anticipated that certain activities undertaken as part of the RA, such as trenching, conveyance piping installation, and electrical connections, will not encounter subsurface chemical hazardous conditions since these activities will be performed in shallow surface soil that is not impacted with any contamination. However, this CP will address the hazard emergencies that might be encountered during the implementation of these activities.

2. IMPLEMENTATION

WESTON will be responsible for the implementation of this CP. The requirements of this CP will be incorporated into the project specifications, where applicable.

2.1 ROLES AND RESPONSIBILITIES

A project organization chart is presented as Figure 2-1. The associated roles and responsibilities are discussed in this section.

2.1.1 NFECSW SDIEGO Team

The positions and responsibilities of the Southwest Division, Naval Facilities Engineering Command, San Diego (NFECSW SDIEGO) project management are as follows:

- **Contracting Officer (CO)**—Responsible for the negotiation and execution of the construction contract. The CO is responsible for providing technical direction to WESTON.

- **Remedial Project Manager (RPM)**—Provides governmental oversight of technical issues for the project. Interfaces with the BCT, community representatives, and the contractor to meet project objectives.

- **Resident Officer in Charge of Construction (ROICC LA)**—Coordinates all work that takes place at MCAS El Toro. Specific tasks include approving vendor submittals, verifying personnel qualifications, conducting constructability reviews, and overseeing construction.

- **Quality Assurance Officer (QAO)**—Responsible for government oversight of the Quality Assurance (QA) program and provides quality-related direction for the project. Has authority to suspend project activities if the contract quality requirements are not met.

NFECSW SDIEGO

Contracting Officer (CO) – **Charles Depew**
Remedial Project Manager (RPM) – **Karnig Ohannessian**
Resident Officer in Charge of Construction (ROICC) – **Scott Kehe**
Quality Assurance Officer (QAO) – **Nars Ancog**

BRAC Closure Team

BRAC Environmental Coordinator (BEC) – **Andy Piszkin**
USEPA RPM – **Nicole Moutoux**
Cal-EPA (DTSC RPM) – **Tayseer Mahmoud**
Cal-EPA (RWQCB Santa Ana Region RPM) – **John Broderick**

Remedial Design & Oversight Contractor – Earth Tech, Inc.

Program Manager – **Ken Vinson, P.E.**
Program Quality Manager – **Ken Vinson, P.E**
Project Manager (PM) – **Crispin Wanyoike**
Health & Safety Manager – **Bob Poll**
Project QA Engineer – **To be determined**
Field, Technical and Health & Safety Staff – **To be determined**

Remedial Action Contractor – Weston Solutions, Inc.

Program Manager – **Cris Jespersen, P.E.**
Chemical QC Manager – **Emma Popek, PhD**
Program Health & Safety Manager – **George Crawford, CIH**
Project Manager – **Tracy Walker, RG**
Project QC Manager – **Berg Keshian, PE**
Project QC Engineer – **Mary Boyd**
Contracts/Procurement Manager – **Rita Muniz**
Site Health and Safety Officer (SHSO) – **Cirilo Lacson**
Site Superintendent – **Matt Lumsden**

Subcontractors

Foreman
Emergency Response Coordinator (ERC)

Figure 2-1: Project Organization Chart

2.1.2 Base Closure Team

The positions and responsibilities of key BCT personnel are as follows:

- **BRAC Environmental Coordinator (BEC)**—The BEC is the NFECSW SDIEGO representative who chairs the BCT and is responsible for coordinating environmental restoration and compliance programs and updating the BRAC Cleanup Plan at MCAS El Toro.

- **U.S. EPA RPM, Department of Toxic Substances Control (DTSC) RPM, and California Regional Water Quality Control Board (RWQCB) RPM**—These agency RPMs are responsible for overseeing and monitoring the progress of remedial design and remedial action, and conformance of these activities with the requirements of the FFA and ROD.

2.1.3 Remedial Design and Oversight Contractor

The remedial design and oversight contractor is contracted by NFECSW SDIEGO for preparation of the 60 percent design package; for oversight of preparation of the 90 percent design package and the 100 percent design package; and for oversight during the construction phase. Earth Tech, Inc. is the remedial design/oversight contractor for the project. The position and responsibilities of key remedial design/oversight contractor are as follows:

- **Program Manager**—The program manager is responsible for all aspects of the CLEAN II program.

- **Program Quality Manager**—The program quality manager is responsible for developing the QA process and supervising audits within the CLEAN II program for compliance with program and project specific procedures and specifications.

- **Project Manager (PM)**—The project manager has overall responsibility for work performed for the remedial design and in duties related to oversight support.

- **Health and Safety Manager**—The health and safety manager is responsible for supporting NFECSW SDIEGO in the review and oversight of the program health and safety.

- **Project QA Engineer**—The project QA engineer has final responsibility for QA activities within the project. The project manager and QA engineer may be the same person, providing that the person is a registered Professional Engineer in the State of California. The QA engineer is responsible for activities stated for the QA staff, daily direction of the QA staff, and testing laboratories.

2.1.4 Remedial Design/Remedial Action Contractor

WESTON has been contracted by NFECSW SDIEGO to construct the extraction wells, conveyance piping, compound, and other ancillary systems in accordance with the final design. WESTON's responsibilities will include, but not be limited to, the following: conducting all fieldwork, implementing the project-related tasks and specifications, and preparing the CP, as an appendix to the 90 and 100 Percent Design Submittals. WESTON will also be responsible for providing activity-specific work instructions to the construction crew for the following: spill prevention, monitoring, response, and reporting; fire prevention, monitoring, response and reporting; and flash flood monitoring, response and reporting.

- **Program Manager**—The program manager is responsible for all aspects of the EMAC remedial action program.

- **Program QC Manager**—The Program QC manager is responsible for developing the QC process and supervising audits of projects within the remedial action program for compliance with program and project-specific procedures and specifications.

- **Project Manager**—The Remedial Action Contractor (RAC) PM will be responsible for all work performed by the RAC in support of the RA. Responsibilities include project planning, review of this CP, preparation of activity specific work instructions, scheduling, staffing, execution of tasks and subcontracts, and communication with the RPM/ROICC and the remedial design/oversight contractor.

- **Emergency Response Manager**—The RAC PM will not be on-site at all times during construction activities. Therefore, the RAC PM will designate an Emergency Response Manager (ERM) who will be present on-site full-time during construction. The ERM will report directly to the RAC PM regarding site activities. The RAC ERM will be the primary responder, and will be responsible for coordinating all emergency response activities. The following are the minimum responsibilities of the ERM: implementing CP procedures; maintaining project site layouts, evacuation plans, and hospital location maps in readily accessible locations; understanding on-site wastes, including location, volume, and characteristics; understanding the resources available for use during emergency response activities; and having an awareness of surrounding properties and populations that may be impacted by site emergencies.

- **Emergency Response Coordinators**—Subcontractors working at the site will be required to designate an Emergency Response Coordinator (ERC) who will support the ERM during a response. The ERC will assist the ERM in directing the response personnel, emergency response equipment and containment equipment. In addition, the ERC will direct evacuation and other activities deemed necessary to protect the

health and safety of onsite personnel and the surrounding population. At least one ERC, certified in administering first aid and cardiopulmonary resuscitation (CPR), will assume the role of the ERM should the primary ERM be incapacitated or unavailable during an emergency incident or emergency response. If the ERM plans to be offsite for any period of time, an ERC shall be designated to stand in for the ERM during the ERM absence. The ERM shall inform workers of the change in authority at the tailgate meeting or other means prior to the absence.

- **Site Health and Safety Officer (SHSO)**—The site safety officer is responsible for establishing and maintaining communications with all site personnel concerning the SHSP, verifying adherence to site safety requirements, organizing and conducting safety meetings (tailgate meetings) and recording and documenting safety incidents on site.

- **Project QC Engineer**—The Project QC Engineer is responsible for ensuring that subcontractors and vendors comply with project requirements and contractual obligations for QC and that all field activities are performed as required by the project design and meet the contract requirements.

- **Additional Personnel And Services**—It is possible that outside agencies and services, such as the fire department, police, and Hazardous Material (HAZMAT) teams will be required during a response action. The RAC ERM will verify that these and other services, such as traffic control or vacuum trucks, are available. The services and support of the RAC PM and Corporate Health and Safety Manager will also be available to the ERM should he require assistance in decision-making.

The ERM and ERC(s) will have a good understanding of the resources available to them, including contact names, phone numbers, and other pertinent information. This information will be prominently posted at several key locations throughout the project site including site access and egress points. A preliminary Emergency Contacts List is provided in Section 3 of this CP.

2.2 EMERGENCY RESPONSE TRAINING

Site personnel will be provided site-specific training that will allow them to conduct response actions in a safe and effective manner. Each field person's responsibilities during an emergency response will be clearly defined by the ERM, prior to an event. Some personnel will merely be required to evacuate to a pre-designated area, while others will have response duties. Specified personnel will be trained in the use of fire extinguishers, spill containment equipment, air monitoring, or other pertinent activities. At least two people should receive training for each potential response activity.

2.3 EMERGENCY RESPONSE DRILLS

Prior to the commencement of field activities, the ERM and ERC shall conduct emergency response drills to ensure that there is a clear understanding of responsibilities of those personnel expected to perform response actions. The ERM and ERC will observe and critique these drills to enhance response personnel's ability to perform potentially required response activities.

2.4 COMMUNICATION

All field personnel are encouraged to communicate any potentially hazardous situations or possible deficiencies within the CP or SHSP to the ERM and/or ERC. This will assist in reducing the possibility of requiring a response action at a later date. The ERM and/or ERC will report any deficiencies/potential hazards to the RAC PM so that corrective actions can be taken.

3. EMERGENCY RESPONSE PROCEDURES

The following subsections identify potential hazards or incidents at the project site, summarize appropriate response actions, and address potential waste disposal issues that may result from remedial activities. Table 3-1 lists the names, associations, and phone numbers of emergency contacts.

3.1 PRE-EMERGENCY PLANNING

Pre-emergency planning activities will include the following:

- Preparation, review, and approval of this CP
- Preparation, review, and approval of SHSP
- Coordination of the CP with local health and emergency agencies and services
- Training of site personnel, including the performance of emergency response drills
- Preparation of activity-specific work instructions
- Conducting daily tailgate safety meetings
- Updating the CP as warranted by changing project site conditions.

3.2 POTENTIAL HAZARD OR INCIDENT IDENTIFICATION

Several hazards or incidents have the potential to cause bodily injury to personnel and/or a release of hazardous substances into the environment beyond the limits of the project site. To mitigate against such incidents occurring, all personnel must abide by the SHSP at all times.

During the RA construction, the emergencies that may occur are as follows:

Well-field and Conveyance Piping Installation:

- Trench collapse during construction

Table 3-1

Preliminary Emergency Contacts List

CONTACT OR AGENCY	TELEPHONE NUMBER
EMERGENCY RESPONSE (Fire, Police, Ambulance)	**911**
Medical Care:	
Irvine Medical Center 16200 Sand Canyon Road Irvine, CA 92718	949-753-2000
Fire Department:	
Orange County Fire Authority	714-289-7880
Police:	
Orange County Sheriff	949-654-2981 Mobile: 949-279-8261
Irvine Police Department	949-724-7000
Information and Response Organizations:	
County of Orange Emergency Operations Center	714-834-7200
Local Poison Control Center	800-484-5151
National Poison Control Center	800-458-5842
National Response Center (NRC) for Toxic Chemical and Oil Spills	800-424-8802
Project Personnel:	
Caretaker Site Officer (CSO), Ron Johnson	619-572-1403
Remedial Project Manager, Karnig Ohannessian	619-532-0796
Design/Oversight Project Manager, Crispin Wanyoike	562-951-2057 Mobile: 562-577-4893
Remedial Action Contractor (RAC) Personnel:	
RAC Project Manager, Tracy Walker	925-948-2652 Mobile: 925-570-0717
RAC ERM, Matt Lumsden	Mobile: 916-296-3717
Subcontractor's ERC	TBD
Adjacent Property Owners/Tenants:	
City of Lake Forest	TBD
Orange County Transit Authority	TBD
Irvine Ranch Water District	TBD
Regulatory Agencies:	
Tayseer Mahmoud RPM, California Department of Toxic Substances Control	714-484-5395
Nicole Moutoux RPM, United States Environmental Protection Agency	415-972 - 3012
John Broderick RPM, California Regional Water Quality Control Board	909-782-4498
Unexploded Ordnance:	
Navy Ordnance Environmental Support Office Sherry McCahill	301-744-4450/6752 Fax: 301-744-6749
Caretaker Site Officer (CSO), Ron Johnson	619-572-1403

- Damage to underground utilities or structures during construction (natural gas, electrical, water/sewer, storm drain, cable television, telephone, fiber optic lines, steam)

- Compressed gas cylinder incidents (cylinders onsite for welding purposes)

- Electrical hazards from existing overhead lines or electrical components installed as part of this remedy.

- Discovery of buried items (e.g. drums, unexploded ordnance [UXO], contaminated soil, hazardous substances) during trenching and well installation

- Construction hazards related to the vehicles and heavy equipment operation during the construction phase of this project, such as equipment malfunction, collisions, personnel injury, etc.

- Conveyance piping breakage during backfill operations, or conveyance piping blockage or rupture during startup activities.

- Exposure to vapors containing VOCs from the equalization tank vent.

General:

- Fire/Explosions

- Flash floods during storm events

- Earthquakes.

3.3 HAZARD IDENTIFICATION

3.3.1 Trench Collapse During Construction

The conveyance system for extracted groundwater from Site 24 to the station boundary involves installation of underground piping. Piping may need to be installed in trenches at depths of 5 to 10 feet below ground surface to avoid existing utilities and underground structures. For safety reasons, shoring and/or sloping of the trenches will be used to stabilize the trench sidewalls. Emergency measures must be in place in case the trench caves in due to unstable shoring. Potential hazards include trench sidewall failure that could lead to physical injury of field personnel.

3.3.2 Damage to Underground Utilities

As part of remedy implementation, a geophysical survey will be performed to identify all underground utilities along the route of the piping network. However, there is a possibility that some underground utilities may not be identified. During trenching activities, these buried utilities may be encountered and damaged. Anticipated underground utilities include electrical conduits, natural gas pipelines, water mains, sanitary sewers, and storm drains. Potential hazards include explosion, fire, and inhalation by field personnel or the local population working in buildings on-station adjacent to the project location from a release of natural gas; human and environmental exposure to sewage; and fire, explosion, and/or electrocution from damage to electrical systems.

3.3.3 Compressed Gas Cylinders

Potential hazards associated with the use of compressed gas cylinders for on-site welding of conveyance piping include explosion, fire, or release and inhalation of the compressed gas by field personnel. The most serious of these hazards is fire or explosion. The RAC, depending on the nature of the incident, will implement appropriate procedures. General response procedures are provided within this CP, and the RAC will prepare detailed activity-specific procedures.

3.3.4 Buried Items

It is possible that undocumented and historical areas of unexploded ordnance (UXO) material, waste disposal, hazardous substances release, contaminated soil, and drums and could be within the construction area. Thus, there is a potential for these materials to be encountered during trenching, excavation, and well installation activities. Resultant hazards might include release of encountered waste to the environment and/or exposure and injury to field personnel.

If UXO material is identified during site operations, work will be stopped. The Navy Ordnance Environmental Support Office (Sherry McCahill), the Caretaker Site Officer (Ron Johnson), and the Navy Remedial Project Manager (Karnig Ohannessian) will be notified that material has been encountered. See Table 3-1 for phone numbers. Table 3-2 lists ways to recognize and identify UXO. However, if UXO is identified, work will not continue until an evaluation of the

Table 3 -2

How to Recognize Unexploded Ordnance

The ability to recognize unexploded ordnance (UXO) is the most important step in reducing risks. Munitions come in all shapes, sizes, and colors. They are color-coded during manufacture to make them easy to identify; however, don't rely on color alone to identify something that might blow you up. Exposure to the weather can alter or remove these markings. Instead of relying on color, use physical features to identify unexploded ordnance outside its normal environment. Listed below are just a few items that may help to identify UXO:

Projectiles range from approximately 1 to 16 inches in diameter and from 2 to 48 inches in length. Projectile fuzes can be located in the nose or in the base. Like rockets, projectiles have fins or bands that stabilize them during flight.

Hand grenades can be filled with explosives or chemicals. You may come across fragmentation, smoke, and illumination grenades. All types have three main parts: a body, a fuze with pull ring, and safety-clip assembly. Fragmentation grenades are the most common. They have a metal or plastic body filled with an explosive. Most use a burning delay fuze that functions 3 to 5 seconds after the safety lever is released, but some (such as smoke grenades) activate instantly when the lever is released.

Rockets use gas pressure from rapidly burning propellant to transport a warhead to a target. They range from 1.5 inches to more than 15 inches in diameter, and from 1 foot long to more than 9 feet long. All rockets have a warhead section, a motor section, and a fuze. The warhead can be filled with explosives, toxic chemicals, white phosphorus, submunitions, a riot-control agent, or illumination flares.

Some fuzes are in the rocket's nose; others are located inside the rocket between the warhead and motor. Impact fuzes function when they hit the target. Delay fuzes contain an element that delays the explosion for a fixed time after impact. Proximity fuzes are intended to function when the rocket reaches a predetermined distance from the target. Don't approach this kind of rocket! The proximity fuzing may activate and cause the warhead to explode. Also, fired rockets may still contain residual propellant that could ignite and burn violently.

Mortars range from approximately 1 to 11 inches in diameter and can be filled with explosives, toxic chemicals, white phosphorus, or illumination flares. Mortars generally have a thinner metal casing than projectiles, but use the same types of fuzing and stabilization.

Projected grenades, specifically the 40mm grenade which is the most common type used, are among the most commonly found UXO items. The 40mm grenade is about the same size and shape as a chicken egg. It contains high explosives and uses a variety of fuzes, including some of the most sensitive, internal, impact-fuzing systems. Because of their relatively small size, 40mm grenades are easily concealed by grass or bushes. They are extremely dangerous and can explode if moved or handled.

Submunitions includes bomblets, grenades, and mines filled with explosives or chemical agents. They may be antipersonnel, antimateriel, antitank, dual-purpose, incendiary, or chemical. They are typically spread over a large area by dispensers, missiles, rockets, or projectiles, which disperse the submunitions while still in flight, scattering them over a wide area. Depending on their intended use, they may be activated by pressure or impact, or if they are moved or disturbed. Some are activated in flight or when they come near metallic objects. Some submunitions contain a backup fuze that will make the device self-destruct after a couple of hours or even several days. Submunitions are extremely hazardous, because even very slight disturbances can cause them to explode. Some submunitions must be stabilized to hit the target straight on, so they are equipped with an arming ribbon, parachute, or fin assembly.

Table 3 -2

How to Recognize Unexploded Ordnance

Bombs range in weight from 1 to more than 3,000 pounds and in length from 3 to 10 feet. Generally, all bombs have the same parts: a metal container, a fuze, and a stabilizing device. The metal container, or bomb body, holds the explosive or chemical filler and may consist of one or multiple pieces. Bombs use either mechanical or electrical fuzes, typically located in the nose or tail, either inside or outside. Mechanical fuzes are generally armed by some type of arming vane, which operates like a propeller to line up all the fuze parts and thus arm the fuze. The fuzes may be configured as impact, proximity, or delay fuzes. Bombs are stabilized during flight by fin or parachute assemblies attached to the rear section of the bomb, which often detach after impact.

After you visually identify a UXO:

1. Do not move any closer to it. Don't try to remove any object on, attached to, or near a UXO. Some types of ordnance have magnetic or motion-sensitive proximity fuzing that may detonate when sensing a target. Others may have self-destruct timers built in. Leave the hazard area and report the UXO.

2. Do not transmit on any radio frequencies near a suspected UXO hazard. Signals transmitted from items such as walkie-talkies, short-wave radios, and citizens' band (CB) radios, or other communications and navigation devices may detonate the UXO.

3. Whenever possible, mark the general location of the UXO hazard with engineer tape, colored cloth, or colored ribbon. Attach the marker to a stick or some other object so that it is about 3 feet off the ground and visible from all approaches. Place the marker no closer than the point where you first recognized the UXO hazard.

4. Stay away from areas known or suspected of UXO contamination.

Source:

Above information obtained from: Naval Safety Center at safetycenter.navy.mil/media/groundwarrior/issues/Winter02/UXO.htm

material has been performed by a specialist and all appropriate precautions have been approved and implemented by the Navy Ordnance Environmental Support Office. These precautions may include: the use of UXO qualified workers, additional oversight by specialists, the establishment of appropriately sized Explosive Safety Quantity-Distance safety arcs, and changes in the type/use of heavy equipment.

If drums of material are encountered, the drums will be assessed for soundness by personnel trained to do such work prior to moving them. Drums will be moved by personnel who are trained to do such work and who are wearing the appropriate person protective equipment (PPE). Qualified and trained personnel will ensure that absorbent material, dikes, or berms are placed around the drum to prevent leakage into the surrounding environment. The drum may be overpacked to prevent additional leakage. The overpacked drum will be labeled and dated. Samples of the contents will be obtained by qualified personnel in appropriate PPE. Analytical results will be used for waste characterization and disposal.

Potentially contaminated soil may be recognized by the observation of stained soil, debris mixed with soil, odors, or non-native soils. If potentially contaminated soil is encountered, the ERM and Navy Caretaker Site Officer will be notified. The soil will be field-tested with a photoionization detector. Personnel will don appropriate PPE before continuing to work in the area. Upon direction from the Navy, all excavated contaminated soil will be placed in lined, bermed, and covered stockpiles. Upon direction from the Navy, the soil will be sampled for characterization and appropriate disposal.

The RAC will prepare more detailed activity-specific procedures to address these types of incidents, should they be encountered. The RAC ERM will initiate appropriate means of identifying the contents of encountered materials/objects. Once known, the ERM will dispose of the materials/wastes properly, with the Navy's approval. The RAC and RPM/ROICC shall be notified immediately and the area where the item was found shall be secured and flagged off and posted with signs to warn of the possible hazard. Work shall commence in the area once proper actions have been taken and the RPM/ROICC notifies (in writing) for work to continue.

3.3.5 Electrical Hazards

Electrical hazards include bodily injury to field personnel due to electrical shock, fire, or possible explosions. This may be from existing overhead lines or from electrical components to be installed as part of this remedy.

3.3.6 Construction Hazards Related to Use of Heavy Equipment

There is the potential for heavy equipment to malfunction or run off course, which could result in bodily injury to operator and field personnel Malfunction of heavy equipment may also result in the release of fuels or hydraulic oil to the environment.

3.3.7 Conveyance Piping Breakage/Joint Failure or Blockage

Conveyance piping breakage may occur during backfill and compaction of excavated trenches. There is also a possibility of piping failure occurring at joint connections, or pipe blockage resulting from remnants of materials used during the pipe installation. Potential hazards that may occur as a result of this include exposure to contaminated water during the repair of the ruptured pipes or during the removal of the blockage from the pipes.

3.3.8 Equalization Tank Vent

The equalization tank vent (located at the top of the tank and connected to a granulated activated carbon [GAC] canister with a hose and shutoff valve) at the compound may potentially be a source for vapors containing volatile organic compounds (VOCs). If the vent is disconnected from the GAC canister without turning off the shutoff valve, VOC vapors could pose a health hazard to site workers. To reduce the chance of exposure, personnel will ensure that the hose connecting the vent to the GAC canister is securely fastened and that, during GAC change-out, the shut off valve is closed to prevent the escape of VOCs.

3.3.9 Fire/Explosion

In addition to the hazards listed above, other potential sources of fire or explosion exist. These include the ignition of any potential vapors encountered during drilling or excavation activities by sparks from heavy equipment or other ignition sources.

3.3.10 Flash Flood

There is a potential for flash flooding during storm events. Flash flooding could cause bodily harm to personnel, and cause an environmental release of hazardous substances at the project site.

3.3.11 Earthquake

There is potential for earthquakes in the region. The hazards associated with earthquakes include underground pipe failure and lateral displacements of underground pipes. This may result in the release of contaminated water into the clean shallow soil, thereby exposing field personnel and other possible users of the site to the contamination.

3.4 RESPONSE PROCEDURES

All hazards identified in Section 3.3 could result in bodily injury, contamination release, fire, or explosions. Therefore, the response actions detailed in this section are directed to address these consequences. The subsections provide a description of general procedures for identifying a hazard or incident and preventive measures to reduce the likelihood of a hazard or incident. This section also presents the reporting requirements and response action to be taken if an incident listed in the previous section (hazards that were identified) was to occur.

3.4.1 Hazard or Incident Detection

Visual observation and air monitoring can provide an indication that an emergency incident has occurred or is about to occur. Field personnel should notify the ERM immediately if there are observations or monitoring that indicate an incident has or is about to occur. The ERM will evaluate the situation and implement response actions as necessary.

The hazard and required response actions will be communicated to all on-site and off-site field personnel, as well as to off-site agencies from which assistance may be required. Field personnel will be alerted in person, via two-way radios, cellular phone, or other appropriate means.

3.4.2 Site Security

It is vitally important to maintain site security before, during, and after an incident or emergency. Only authorized personnel are allowed on site during any phase of this project. In addition, only authorized personnel may participate in construction activities, and they must first participate in a site-specific tailgate briefing that identifies potential hazards and incidents, as well as the responses to these incidents should they occur. The RAC shall identify the person who is in charge of maintaining security at the site including a sign-in and sign-out log for all construction personnel and visitors.

3.4.3 Response to Personnel Injury

Personnel injuries fall into two general categories: those injuries that can be addressed by first aid practices on site; and injuries that require the services from an off-site agency, such as paramedics. There will be at least two personnel at the project site with training in first aid and CPR. These personnel will administer first aid to those injured, or will sustain injured personnel until paramedics arrive.

After first aid has been administered to injured personnel, they may require transport to a hospital for additional assessment and treatment. Injured personnel may be transported to the local hospital in non-emergency vehicles if those trained in first aid deem that the injury is not life-threatening and do not consider the support of paramedics as necessary. The route to the local hospital will be provided in the SHSP.

If necessary, the ERM will notify the local hospital, emergency response agencies, or other pertinent parties as listed in the preliminary Emergency Contact List (see Table 3-1). If injured personnel have been in contact with a potentially hazardous substance, Material Safety Data Sheets for these substances shall accompany them if the hazardous substance is known.

In all cases, the ERM shall notify the RAC PM as soon as possible. The RAC PM shall in turn notify the RPM/ROICC and the design/oversight contractor's PM.

3.4.4 Environmental Releases

Construction equipment will be used to drill and install wells, excavate and backfill trenches, and install conveyance piping. Although it is not anticipated that the areas that are to be excavated contain containers of unknown substances, such an encounter could cause damage to the container resulting in an environmental release.

3.4.4.1 Prevention of Environmental Releases

Implementing engineering controls can reduce the likelihood of an environmental release. Drums being temporarily stored for assessment or removal should be placed within an area equipped with secondary containment and located a safe distance from construction activities. Spill recovery supplies, such as absorbent pads, should be readily available. Any waste materials to be removed from the site should be placed in 55-gallon, Department of Transportation-approved drums to help ensure the safe transport and delivery of contents to an approved disposal facility.

3.4.4.2 Response to Environmental Releases

Should an unknown substance be unearthed or a known substance unearthed and container broken, the following procedure should be implemented by the SSO who is to be designated by the RAC:

1. Stop all work.
2. Assess names/types of materials (if possible).
3. Assess whether material has been released and approximate quantity of release.
4. Assess the hazardous characteristics of the substance.
5. If necessary, call 911 and notify the ERM immediately.

Depending on the type of material, the current condition of the material container, and the hazardous characteristics of the material, an outside contractor may be called upon to assume responsibility for the removal and cleanup of the materials. The contractor's team will then determine the appropriate course of action for removing the substance in a safe and efficient manner. Responders will assess any containers discovered during drilling or trenching activities for structural soundness prior to moving such containers. Absorbent materials will be stockpiled next to the excavation prior to moving such containers, and absorbent materials will be used for collection/containment of leaked contents. All personnel involved in responding to the unearthed container will be properly trained to move the containers and will wear PPE appropriate for the conditions.

A spill or leak of fuel or hydraulic oil from heavy equipment will be addressed with the use of portable containment booms, absorbent pads or other absorbent material. Impacted soil will be excavated and removed and disposed of in accordance with Section 3.4.8.

3.4.4.3 Reporting of Environmental Releases

Any environmental release should be reported immediately to the ERM, who will subsequently report it to the RPM. The RAC RM shall in turn notify the RPM/ROICC and design/oversight contractor's PM. The quantity will be estimated, and if exceeding the reportable quantities established by regulatory agencies, a report to the appropriate regulatory agency will be made. Response actions implemented to address an environmental release will be recorded in the daily log and documented in the weekly project reports.

3.4.5 Fire/Explosion Hazards

In order to eliminate the likelihood of fire or explosion, monitoring for an explosive gas mixture will be conducted periodically in the well and piping installation work areas. Details on location and frequency of the monitoring will be made available in the SHSP prepared by the RAC.

3.4.5.1 Prevention of Fire/Explosion

Implementing a number of engineering controls, as well as performing air monitoring procedures can reduce the risk of fire at the project site. As much as possible, non-sparking excavation equipment should be used at the site and any welding activities will be performed in areas clear of any potentially flammable materials. Air monitoring via an explosimeter or similar device will provide advance indication of a possible fuel source for a fire or explosion. Construction activities being performed in an area that indicates a potential fire or explosion hazard will be suspended immediately, and will not be resumed until the DON RPM or ROICC and RAC PM discuss and agree upon a course of action. Air monitoring procedures are included in Section 5 of this CP with detailed procedures described in the SHSP.

3.4.5.2 Response to Fire/Explosion

Response to fire will be dependent upon its size, source, and location. The RAC ERM or designated ERC will be responsible for assessing the fire hazard, which will determine the type of response. The fire may be designated as small or large. The appropriate initial response actions for each scenario are listed below. The following processes will be discussed and key personnel identified during the daily tailgate health and safety meetings at the project site.

Small Fire. A small fire is one that can be extinguished with the fire extinguishers and other equipment that are available on-site. The fire extinguishers that will be supplied will have a minimum rating of 1A, 10B, C. In addition, a fire extinguisher with a minimum rating of 2A, 10B will be mounted on each piece of heavy equipment.

If a small fire occurs at the project site, the following minimum initial actions shall be implemented:

1. Remove all unnecessary personnel to a location that is out of the area of immediate danger, at a location that is upwind of the fire, or other area that is not impacted by smoke.
2. The RAC ERM or ERC will contact the appropriate emergency services (ambulance or hospital) for injured personnel, if necessary.

3. Properly trained, authorized personnel shall attempt to extinguish the fire with the available fire extinguishers and equipment.

4. If the fire cannot be extinguished with the available fire extinguishers, the RAC ERM or ERC will contact the appropriate emergency services (fire department, police, HAZMAT, poison control center) for assistance.

5. Notify the RPM/ROICC and the design/oversight PM.

Refer to the SHSP for evacuation routes and the location of the nearest hospital.

Large Fire. A large fire is one that cannot be extinguished with the fire extinguishers and other equipment that are available on-site. If a large fire occurs at the project site, the following minimum initial actions shall be implemented:

1. Remove all personnel to a location that is out of the area of immediate danger, at a location that is upwind of the fire, or other area that is not impacted by smoke.

2. The RAC ERM or ERC will contact the appropriate emergency services (i.e. ambulance or hospital) for injured personnel, if necessary.

3. The RAC ERM or ERC will contact the appropriate emergency services for assistance (e.g. fire department, police, HAZMAT, poison control center).

4. Notify the RPM/ROICC, design/oversight PM and adjacent property owners and tenants.

Refer to the SHSP for evacuation routes and the location of the nearest hospital.

3.4.5.3 Reporting Fire/Explosion

The first priority is ensuring the health and safety of personnel at the site. Once all personnel have been evacuated from the vicinity of the incident and response actions are being implemented to address the incident, the ERM should notify the RAC PM of the situation. If necessary, the incident should be reported to agencies such as the fire department or police.

3.4.6 Flash Flooding

There is a potential for flash flooding during storm events. Flash flooding may occur as a result of a local rain event or a rain event that occurs in the nearby Santa Ana Mountains.

3.4.6.1 Response to Flash Flood Conditions

If local storms are expected or occur during construction activities, the ERM should monitor the Emergency Broadcasting System and/or the National Weather Service to receive advance notice of expected flash flooding on a portable radio that is maintained at the site. The appropriate course of action during heavy rainfall events at the site is to have all on-site personnel evacuate potential flash flood areas and assemble at an emergency assembly site (EAS) until the potential for flash flooding is eliminated. The EAS location will be made known to all personnel during the site-specific safety briefing. There is no preventing flash flooding, merely reducing its potential impacts to the site. Once site personnel are safe and if the flood event causes a release of contaminants, the response procedure for environmental releases described in Section 3.4.4 is to be followed, i.e.:

1. Stop all work and move personnel and equipment to high ground
2. Assess names/types of materials (if possible).
3. Assess whether material has been released and approximate quantity of release.
4. Assess the hazardous characteristics of the substance.
5. If necessary, call 911 and notify the ERM immediately.

Preventive measures, such as placing sandbags around excavated areas may be implemented if rainfall is expected in the vicinity of the project site. This may redirect flash flood water around the area being excavated. The Storm Water Pollution Prevention Plan will provide specific instructions regarding such measures. If the flash flood causes the release of wastes to the environment, the ERM shall contact the RAC PM to determine the next course of action.

3.4.6.2 Reporting Flash Flooding

A flash flood should be reported to the RAC PM as soon as all personnel are safe and the situation under control. Any impacts of the flash flood on the project site, such as a resulting release of wastes to the environment will be reported to the RAC PM and appropriate regulatory agencies.

3.4.7 Earthquake

Southern California has a history of earthquakes that can be very destructive. Such ground motion may not be predicted ahead of time.

3.4.7.1 Hazard Mitigation

Standard operating procedures must include attention to pipe rupture and lateral displacement.

3.4.7.2 Response to Earthquake

If an earthquake occurs at the project site, the following minimum initial actions shall be implemented:

1. Remove all unnecessary personnel to a location that is out of the area of immediate danger, at a location that is protected from unstable overhead structures or unstable ground.
2. The RAC ERM or ERC will contact the appropriate emergency services (ambulance or hospital) for injured personnel, if necessary.
3. Notify the RPM/ROICC and the design/oversight PM.

Refer to the SHSP for evacuation routes and the location of the nearest hospital.

Inspections will be conducted after major weather or seismic events. Inspection and maintenance guidelines in response to earthquake will be developed in the operations and maintenance plan for the final extraction and conveyance system. Site security controls, including fences, signage, and gates, will be maintained, repaired, and/or replaced as needed to maintain the integrity of the security system and the site. The entire route of the pipe network will be inspected for indications of pipe damage.

If an earthquake occurs within 60 miles of the project site, all work should be stopped. Workers should observe site conditions as they exit. All on-site personnel and visitors should assemble at the emergency assembly site (EAS). The ERM will collect accounts of the state of the system, and provide this information to the project engineer.

3.4.7.3 Reporting Earthquake Damage

The findings of the inspections detailed above will be properly documented as described in the CQC Plan. Work may be re-started immediately in areas where inspection has found no damage that requires corrective action. Smaller defects in buried pipe will be repaired immediately by excavation and refill in accordance with the CQC Plan. More extensive corrective actions will be determined through consultation with the RPM/ROICC.

3.4.8 Waste Disposal

Waste streams may be generated during an emergency incident or during the performance of response actions. These are to be handled in accordance with the project specific waste disposal plan and applicable state and federal regulations.

4. EMERGENCY RESPONSE EQUIPMENT

Emergency response equipment will be available on site or off site, depending on the nature and extent of the incident. Emergency response equipment is identified in the following subsections.

4.1 ON-SITE EQUIPMENT AND SUPPLIES

Various emergency response equipment and supplies should be maintained at the project sites, including these items:

- Communication devices; two-way radios, or cellular phones, or horns.
- Portable AM radio.
- First aid supplies, including a first aid kit and emergency eye wash station.
- Fire extinguishers (minimum rating of 1A, 10B, C).
- Flood control and spill response kit (e.g., sand bags, fiber rolls, containment booms, absorbent).
- Decontamination station and equipment (e.g., emergency eye wash).

The ERM will conduct a daily tailgate meeting with all site personnel and will discuss the location and use of the items listed above.

4.2 OFF SITE EQUIPMENT AND SERVICES

The RAC ERM will verify that off-site emergency response equipment and services are available. Telephone numbers for these items will be maintained with the Emergency Contacts List. A preliminary list of off-site equipment and services relevant to the project is shown below:

- Fire fighting equipment and services
- Ambulance and hospital
- Vacuum trucks and other spill containment services
- Additional heavy equipment (other than the backhoe and trucks on site for site operations)
- Traffic control services

5. SUPPLEMENTAL PROCEDURES

5.1 AIR MONITORING PLAN

This subsection presents a brief summary of air monitoring procedures that will be implemented during field activities. A detailed description of air monitoring procedures may be found in the SHSP. Air monitoring is separated into three possible categories, as shown below.

5.1.1 Personnel Monitoring

The workspace in which field personnel will be working will be monitored in accordance with the SHSP. Parameters to be monitored include oxygen level; percent lower explosive limit (LEL); and VOC concentrations. Readings from monitoring instruments will be recorded in a daily log.

All monitoring instruments will be calibrated in accordance with manufacturer recommendations and per the detailed requirements of the SHSP.

5.1.2 Construction Monitoring

Air monitoring will be performed in the vicinity of excavation and construction areas in accordance with the technical specifications and as specified in the SHSP. This will include monitoring of excavated soil for VOCs and LEL, monitoring of wind speed direction, and monitoring of VOCs both upwind and downwind of the site. Monitoring of particulate matter will also be performed in accordance with South Coast Air Quality Management District Rule 403. Field personnel will be encouraged to be aware of odors during excavation and construction, and should report these to the ERM and ERC as soon as possible. Emergency action limits for airborne constituents are defined in the SHSP.

5.1.3 Emergency Incident Monitoring

Air monitoring will be performed during emergency response incidents. Monitoring will be performed both on-site to ensure the health and safety of field personnel, and at the perimeter of

the project site to ensure that surrounding populations are not being endangered. Air monitoring during emergency incidents will include, as a minimum, the following:

- Flame ionization detector (organic vapor analyzer 108 or equivalent) monitoring for VOCs
- LEL monitoring to assess the potential for explosion or fire
- Oxygen monitoring to assess the potential for oxygen deficiency.

Other supplemental emergency incident air monitoring procedures will be specified in the SHSP and RAC procedures.

5.1.4 Emergency Action Limits

Emergency action limits for airborne constituents may be found in the SHSP.

6. REFERENCES

DON. *See* United States Department of the Navy.

United States Department of the Navy, Naval Facilities Engineering Command. 2002. *Record of Decision Operable Unit* 1, *Site* 18 - *Regional Volatile Organic Compound Groundwater Plume, Operable Unit* 2A, *Site* 24 -*VOC Source Area, Former Marine Corps Air Station, El Toro, California. San Diego, CA.*

Federal Facilities Agreement. 1990. *Federal Facility Agreements between the U.S. Marine Corps, U.S. EPA Region IX, Cal-EPA Department of Toxic Substances Control, and California Regional Water Quality Control Board*