BEACON Report No. PSG1872

PASSIVE SOIL-GAS SURVEY
DESILVA HAYWARD
HAYWARD, CA

Prepared for

WEST, Inc.
711 Grand Avenue
Suite 220
San Rafael, CA 94901

by

Beacon Environmental Services, Inc.
323 Williams Street
Suite D
Bel Air, MD 21014

February 27, 2006

Applying Results from Soil-Gas Surveys

The utility of soil-gas surveys is directly proportional to their accuracy in reflecting and representing changes in the subsurface concentrations of source compounds. Passive soil-gas survey results are the mass collected from the vapor-phase emanating from the source. The vapor-phase is merely a fractional trace of the source, so, as a matter of convenience, the units used in reporting detection values from passive soil-gas surveys are smaller than those employed for source-compound concentrations.

The critical fact is that, whatever the relative concentrations of source and associated soil gas, best results are realized when the ratio of soil-gas measurements to actual subsurface concentrations remains as close to constant as the real world permits. It is the reliability and consistency of this ratio, not the particular units of mass (*e.g.*, nanograms) that determine usefulness. Thus, BEACON emphasizes the necessity of conducting — at minimum — follow-on intrusive sampling at one or two points that show relatively high soil-gas measurements to obtain corresponding concentrations of soil and groundwater contaminants. These correspondent values furnish the basis for approximating the required ratio. Once that ratio is established, it can be used in conjunction with the soil-gas measurements (regardless of the units adopted) to estimate subsurface contaminant concentrations across the survey field. It is important to keep in mind, however, that specific conditions at individual sample points, including soil porosity and permeability, depth to contamination, and perched ground water, can have significant impact on soil-gas measurements at those locations.

When passive soil-gas surveys are handled in this way, the data provide information that can yield substantial savings in drilling costs and in time. They furnish, among other things, a checklist of compounds expected at each survey location and help to determine how and where drilling budgets can most effectively be spent.

BEACON Report Number: PSG1872

Passive Soil-Gas Survey
Desilva Hayward
Hayward, CA

This Passive Soil-Gas Survey Report has been prepared for WEST, Inc. (WEST) by Beacon Environmental Services, Inc. (BEACON) in accordance with the terms of the signed order confirmation form, dated January 18, 2006. BEACON's principal technical contact at WEST for this project has been Ms. Sharon Squire.

1. Objectives

Soil-gas samples were collected to determine the presence, identity, and relative strength of targeted contaminants in soil and/or ground water at the Desilva Hayward site. Survey results will be used to identify source areas and delineate the lateral extent of contamination.

2. Target Compounds

This survey targeted the 41 compounds listed in **Table 1**, which supplies the resulting laboratory data in nanograms (ng) of specific compound per cartridge.

3. Survey Description

No. of Field Samples:	23
No. of Duplicate Field Samples:	1
No. of Trip Blanks:	1
Total No. of Samples:	25

Field sample locations are shown on **Figure 1**.

4. Field Work

WEST was provided a Field Kit with the equipment needed to conduct a 23-point passive soil-gas survey. Samplers were deployed on January 25, 2006, and were retrieved on February 15, 2006. **Attachment 1** describes the field procedures used. Individual deployment and retrieval times will be found in the Field Deployment Report (**Attachment 2**).

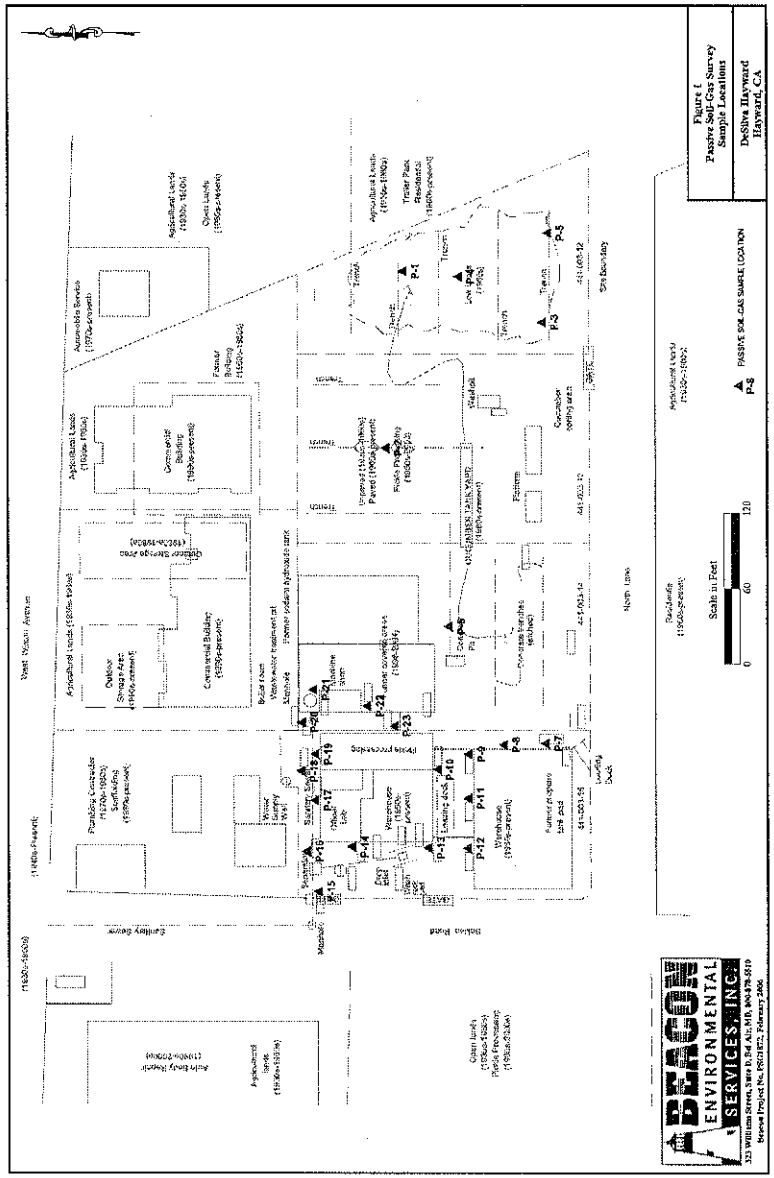

5. Analysis and Reporting Dates

BEACON's laboratory received 25 samples for analysis on February 16, 2006. Adsorbent cartridges from the passive samplers were thermally desorbed, then analyzed using gas chromatography/mass spectrometry (GC/MS) equipment, in accordance with EPA Method 8260B (Modified), as described in **Attachment 3**. BEACON's laboratory analyzed each cartridge for the targeted compounds; analyses were completed on February 17, 2006. Following a laboratory review, results were provided to WEST on February 20, 2006. On February 24, 2006, WEST authorized BEACON to issue the final report.

6. Report Notes and Quality Assurance/Quality Control Factors

Table 1 provides survey results in nanograms per cartridge by sample-point number and compound name. The quantitation levels represent values above which quantitative laboratory results can be achieved within specified limits of precision and with a high degree of confidence. The quantitation level for each compound, therefore, provides a reliable basis for comparing the relative strength of any detection of that compound.

Data Compatibility. It is important to note that when sample locations are covered with or near the edge of an artificial surface (*e.g.*, asphalt or concrete), sample measurements are often distorted (increased) significantly. Such distortion can be attributed to the fact that gas rising from sources beneath impermeable caps tends to reach equilibrium underneath the cap. Thus, a reading taken below or near an impermeable surface is much higher than it would be in the absence of such a cap.

The **Chain-of-Custody** form, which was shipped with the samples for this survey, is supplied as **Attachment 4**.

Laboratory QA/QC procedures included standards, surrogates, and blanks appropriate to EPA Method 8260 (Modified). Field work, analyses, and reporting were done in accordance with BEACON's Quality Assurance Program Plan.

QA/QC Contaminant Corrections. Following EPA guidelines, laboratory data is not corrected for method blank or trip blank sample contamination values; any contamination detected on QA/QC samples is reported in **Table 1**.

Laboratory method blanks are run each day with project samples to identify contamination present in the laboratory. If contamination is detected on a method blank, measurements of identical compounds on samples analyzed the same day are considered to be suspect and are flagged in the laboratory report. The laboratory method blank analyzed in connection with the present samples revealed no contamination.

BEACON ENVIRONMENTAL SERVICES, INC.
Passive Soil-Gas Survey
Desilva Hayward
Hayward, CA

The **trip blank** is a sampling cartridge prepared, transported, and analyzed with other samples but intentionally not exposed. Any target compounds identified on the trip blanks are reported in the laboratory data. The analysis of the trip blank (labeled Trip-1 in **Table 1**) reported none of the targeted compounds, indicating that the survey site itself is the source of detected contamination.

Duplicates. BEACON's passive soil-gas samplers are prepared with two cartridges for subsequent duplicate or confirmatory sample analysis. At WEST's request, duplicate analysis was performed for sample P-10, designated P-10 DUP in **Table 1**. Because of finite differences between the cartridges, and the random nature of diffusive particle movement, comparisons between duplicates and primary samples should be made on a qualitative basis, as quantitative results may be subject to random distortions. However, when comparing quantitative results, a duplicate correspondence should be considered when the relative percent difference (RPD) between the two samples is less than or equal to 100%. Also, for the purpose of calculating correspondences, all non-detections should be assigned, as a baseline value, the quantitation level for the specific contaminant. Based on these assumptions, a 100% correlation was found between the duplicate sample and its base sample.

Survey findings are relative exclusively to this project and should not routinely be compared with results of other BEACON Surveys. *To establish a relationship between reported soil-gas measurements and actual subsurface contaminant concentrations, which will indicate those detections representing significant subsurface contamination, BEACON recommends the guidelines on the inside front cover of this report.*

At the request of WEST, the following compound distribution maps have been provided:

Figure 2 — 1,1,1-Trichloroethane
Figure 3 — Tetrachloroethene
Figure 4 — Total BTEX

The following **Attachments** are included:

-1- Field Procedures
-2- Field Deployment Report
-3- Laboratory Procedures
-4- Chain-of-Custody Form

Table 1

Beacon Environmental Services, Inc.
323 Williams Street, Ste. D
Bel Air, MD 21014

Analysis by EPA Method 8260B (Modified)

Client Sample ID:	Meth_Blk	Trip-1	P-1	P-2	P-3	P-4
Project Number:		PSG1872	PSG1872	PSG1872	PSG1872	PSG1872
Lab File ID:	06021603	06021604	06021605	06021606	06021607	06021608
Received Date:		2/16/2006	2/16/2006	2/16/2006	2/16/2006	2/16/2006
Analysis Date:	2/16/2006	2/16/2006	2/16/2006	2/16/2006	2/16/2006	2/16/2006
Analysis Time:	11:50	12:21	12:52	13:23	13:53	14:24
Units:	ng/trap	ng/trap	ng/trap	ng/trap	ng/trap	ng/trap
COMPOUNDS						
1,1-Dichloroethene	<25	<25	<25	<25	<25	<25
1,1,2-Trichlorotrifluoroethane	<25	<25	<25	<25	<25	<25
trans-1,2-Dichloroethene	<25	<25	<25	<25	<25	<25
Methyl-t-butyl Ether	<25	<25	<25	<25	<25	<25
1,1-Dichloroethane	<25	<25	<25	<25	<25	<25
cis-1,2-Dichloroethene	<25	<25	<25	<25	<25	<25
Chloroform	<25	<25	<25	<25	<25	<25
2,2-Dichloropropane	<25	<25	<25	<25	<25	<25
1,2-Dichloroethane	<25	<25	<25	<25	<25	<25
1,1,1-Trichloroethane	<25	<25	<25	<25	<25	<25
1,1-Dichloropropene	<25	<25	<25	<25	<25	<25
Carbon Tetrachloride	<25	<25	<25	<25	<25	<25
Benzene	<25	<25	<25	<25	<25	<25
1,2-Dichloropropane	<25	<25	<25	<25	<25	<25
Trichloroethene	<25	<25	**81**	<25	<25	<25
1,4-Dioxane	<25	<25	<25	<25	<25	<25
cis-1,3-Dichloropropene	<25	<25	<25	<25	<25	<25
trans-1,3-Dichloropropene	<25	<25	<25	<25	<25	<25
1,1,2-Trichloroethane	<25	<25	<25	<25	<25	<25
Toluene	<25	<25	<25	**216**	**43**	<25
1,3-Dichloropropane	<25	<25	<25	<25	<25	<25
1,2-Dibromoethane (EDB)	<25	<25	<25	<25	<25	<25
Tetrachloroethene	<25	<25	**661**	<25	<25	<25
1,1,1,2-Tetrachloroethane	<25	<25	<25	<25	<25	<25
Chlorobenzene	<25	<25	<25	<25	<25	<25
Ethylbenzene	<25	<25	<25	**173**	<25	<25
p & m-Xylene	<25	<25	<25	<25	<25	<25
Bromoform	<25	<25	<25	<25	<25	<25
1,1,2,2-Tetrachloroethane	<25	<25	<25	<25	<25	<25
o-Xylene	<25	<25	<25	<25	<25	<25
1,2,3-Trichloropropane	<25	<25	<25	<25	<25	<25
Isopropylbenzene	<25	<25	<25	<25	<25	<25
1,3,5-Trimethylbenzene	<25	<25	<25	<25	<25	<25
1,2,4-Trimethylbenzene	<25	<25	<25	<25	<25	<25
1,3-Dichlorobenzene	<25	<25	<25	<25	<25	<25
1,4-Dichlorobenzene	<25	<25	<25	<25	<25	<25
1,2-Dichlorobenzene	<25	<25	<25	<25	<25	<25
n-Butylbenzene	<25	<25	<25	<25	<25	<25
1,2,4-Trichlorobenzene	<25	<25	<25	<25	<25	<25
Naphthalene	<25	<25	<25	<25	<25	<25
1,2,3-Trichlorobenzene	<25	<25	<25	<25	<25	<25

Results in nanograms (ng). J = Estimated value below reported quantitation level. B = Detected in method blank.

Table 1

Beacon Environmental Services, Inc.
323 Williams Street, Ste. D
Bel Air, MD 21014

Analysis by EPA Method 8260B (Modified)

Client Sample ID:	P-5	P-6	P-7	P-8	P-9	P-10
Project Number:	PSG1872	PSG1872	PSG1872	PSG1872	PSG1872	PSG1872
Lab File ID:	06021609	06021610	06021611	06021612	06021613	06021614
Received Date:	2/16/2006	2/16/2006	2/16/2006	2/16/2006	2/16/2006	2/16/2006
Analysis Date:	2/16/2006	2/16/2006	2/16/2006	2/16/2006	2/16/2006	2/16/2006
Analysis Time:	14:55	15:26	15:57	16:28	16:58	17:29
Units:	ng/trap	ng/trap	ng/trap	ng/trap	ng/trap	ng/trap
COMPOUNDS						
1,1-Dichloroethene	<25	<25	<25	<25	<25	<25
1,1,2-Trichlorotrifluoroethane	<25	<25	<25	<25	<25	<25
trans-1,2-Dichloroethene	<25	<25	<25	<25	<25	<25
Methyl-t-butyl Ether	<25	<25	<25	<25	<25	<25
1,1-Dichloroethane	<25	<25	<25	<25	<25	<25
cis-1,2-Dichloroethene	<25	<25	<25	<25	<25	<25
Chloroform	<25	<25	<25	<25	<25	<25
2,2-Dichloropropane	<25	<25	<25	<25	<25	<25
1,2-Dichloroethane	<25	<25	<25	<25	<25	<25
1,1,1-Trichloroethane	<25	<25	<25	<25	<25	**1,838**
1,1-Dichloropropene	<25	<25	<25	<25	<25	<25
Carbon Tetrachloride	<25	<25	<25	<25	<25	<25
Benzene	<25	<25	<25	<25	<25	<25
1,2-Dichloropropane	<25	<25	<25	<25	<25	<25
Trichloroethene	<25	<25	<25	<25	<25	<25
1,4-Dioxane	<25	<25	<25	<25	<25	<25
cis-1,3-Dichloropropene	<25	<25	<25	<25	<25	<25
trans-1,3-Dichloropropene	<25	<25	<25	<25	<25	<25
1,1,2-Trichloroethane	<25	<25	<25	<25	<25	<25
Toluene	**28**	<25	<25	<25	**33**	**38**
1,3-Dichloropropane	<25	<25	<25	<25	<25	<25
1,2-Dibromoethane (EDB)	<25	<25	<25	<25	<25	<25
Tetrachloroethene	**60**	<25	**32**	<25	<25	**893**
1,1,1,2-Tetrachloroethane	<25	<25	<25	<25	<25	<25
Chlorobenzene	<25	<25	<25	<25	<25	<25
Ethylbenzene	<25	<25	<25	<25	<25	<25
p & m-Xylene	<25	<25	<25	<25	**39**	<25
Bromoform	<25	<25	<25	<25	<25	<25
1,1,2,2-Tetrachloroethane	<25	<25	<25	<25	<25	<25
o-Xylene	<25	<25	<25	<25	**33**	<25
1,2,3-Trichloropropane	<25	<25	<25	<25	<25	<25
Isopropylbenzene	<25	<25	<25	<25	<25	<25
1,3,5-Trimethylbenzene	<25	<25	<25	<25	<25	<25
1,2,4-Trimethylbenzene	<25	<25	<25	<25	<25	<25
1,3-Dichlorobenzene	<25	<25	<25	<25	<25	<25
1,4-Dichlorobenzene	<25	<25	<25	<25	<25	<25
1,2-Dichlorobenzene	<25	<25	<25	<25	<25	<25
n-Butylbenzene	<25	<25	<25	<25	<25	<25
1,2,4-Trichlorobenzene	<25	<25	<25	<25	<25	<25
Naphthalene	<25	<25	<25	<25	<25	<25
1,2,3-Trichlorobenzene	<25	<25	<25	<25	<25	<25

Results in nanograms (ng). J = Estimated value below reported quantitation level. B = Detected in method blank.

Table 1

Beacon Environmental Services, Inc.
323 Williams Street, Ste. D
Bel Air, MD 21014

Analysis by EPA Method 8260B (Modified)

Client Sample ID:	P-10 DUP	P-11	P-12	P-13	P-14	P-15
Project Number:	PSG1872	PSG1872	PSG1872	PSG1872	PSG1872	PSG1872
Lab File ID:	06021615	06021616	06021617	06021618	06021619	06021620
Received Date:	2/16/2006	2/16/2006	2/16/2006	2/16/2006	2/16/2006	2/16/2006
Analysis Date:	2/16/2006	2/16/2006	2/16/2006	2/16/2006	2/16/2006	2/16/2006
Analysis Time:	18:00	18:31	19:02	19:33	20:04	20:35
Units:	ng/trap	ng/trap	ng/trap	ng/trap	ng/trap	ng/trap
COMPOUNDS						
1,1-Dichloroethene	<25	<25	<25	<25	<25	<25
1,1,2-Trichlorotrifluoroethane	<25	<25	<25	<25	<25	<25
trans-1,2-Dichloroethene	<25	<25	<25	<25	<25	<25
Methyl-t-butyl Ether	<25	<25	<25	<25	<25	<25
1,1-Dichloroethane	<25	<25	<25	<25	<25	<25
cis-1,2-Dichloroethene	<25	<25	<25	<25	<25	<25
Chloroform	<25	<25	<25	<25	<25	<25
2,2-Dichloropropane	<25	<25	<25	<25	<25	<25
1,2-Dichloroethane	<25	<25	<25	<25	<25	<25
1,1,1-Trichloroethane	**1,862**	<25	<25	<25	<25	<25
1,1-Dichloropropene	<25	<25	<25	<25	<25	<25
Carbon Tetrachloride	<25	<25	<25	<25	<25	<25
Benzene	<25	**36**	<25	<25	<25	<25
1,2-Dichloropropane	<25	<25	<25	<25	<25	<25
Trichloroethene	<25	<25	<25	<25	<25	<25
1,4-Dioxane	<25	<25	<25	<25	<25	<25
cis-1,3-Dichloropropene	<25	<25	<25	<25	<25	<25
trans-1,3-Dichloropropene	<25	<25	<25	<25	<25	<25
1,1,2-Trichloroethane	<25	<25	<25	<25	<25	<25
Toluene	**38**	**153**	<25	<25	**35**	<25
1,3-Dichloropropane	<25	<25	<25	<25	<25	<25
1,2-Dibromoethane (EDB)	<25	<25	<25	<25	<25	<25
Tetrachloroethene	**924**	**80**	**63**	**146**	<25	**111**
1,1,1,2-Tetrachloroethane	<25	<25	<25	<25	<25	<25
Chlorobenzene	<25	<25	<25	<25	<25	<25
Ethylbenzene	<25	**36**	<25	<25	<25	<25
p & m-Xylene	<25	**85**	<25	<25	<25	<25
Bromoform	<25	<25	<25	<25	<25	<25
1,1,2,2-Tetrachloroethane	<25	<25	<25	<25	<25	<25
o-Xylene	<25	**99**	<25	<25	<25	<25
1,2,3-Trichloropropane	<25	<25	<25	<25	<25	<25
Isopropylbenzene	<25	<25	<25	<25	<25	<25
1,3,5-Trimethylbenzene	<25	<25	<25	<25	<25	<25
1,2,4-Trimethylbenzene	<25	<25	<25	<25	<25	<25
1,3-Dichlorobenzene	<25	<25	<25	<25	<25	<25
1,4-Dichlorobenzene	<25	<25	<25	<25	<25	<25
1,2-Dichlorobenzene	<25	<25	<25	<25	<25	<25
n-Butylbenzene	<25	<25	<25	<25	<25	<25
1,2,4-Trichlorobenzene	<25	<25	<25	<25	<25	<25
Naphthalene	<25	<25	<25	<25	<25	<25
1,2,3-Trichlorobenzene	<25	<25	<25	<25	<25	<25

Results in nanograms (ng). J = Estimated value below reported quantitation level. B = Detected in method blank.

Table 1

Beacon Environmental Services, Inc.
323 Williams Street, Ste. D
Bel Air, MD 21014

Analysis by EPA Method 8260B (Modified)

Client Sample ID:	P-16	P-17	P-18	P-19	P-20	P-21
Project Number:	PSG1872	PSG1872	PSG1872	PSG1872	PSG1872	PSG1872
Lab File ID:	06021621	06021622	06021623	06021624	06021625	06021626
Received Date:	2/16/2006	2/16/2006	2/16/2006	2/16/2006	2/16/2006	2/16/2006
Analysis Date:	2/16/2006	2/16/2006	2/16/2006	2/16/2006	2/16/2006	2/16/2006
Analysis Time:	21:06	21:37	22:08	22:39	23:10	23:41
Units:	ng/trap	ng/trap	ng/trap	ng/trap	ng/trap	ng/trap
COMPOUNDS						
1,1-Dichloroethene	<25	<25	<25	<25	<25	<25
1,1,2-Trichlorotrifluoroethane	<25	<25	<25	<25	<25	<25
trans-1,2-Dichloroethene	<25	<25	<25	<25	<25	<25
Methyl-t-butyl Ether	<25	<25	<25	<25	<25	<25
1,1-Dichloroethane	<25	<25	<25	<25	<25	<25
cis-1,2-Dichloroethene	<25	<25	<25	<25	<25	<25
Chloroform	<25	<25	<25	<25	<25	<25
2,2-Dichloropropane	<25	<25	<25	<25	<25	<25
1,2-Dichloroethane	<25	<25	<25	<25	<25	<25
1,1,1-Trichloroethane	<25	<25	<25	<25	<25	<25
1,1-Dichloropropene	<25	<25	<25	<25	<25	<25
Carbon Tetrachloride	<25	<25	<25	<25	<25	<25
Benzene	<25	**28**	<25	<25	<25	<25
1,2-Dichloropropane	<25	<25	<25	<25	<25	<25
Trichloroethene	<25	<25	<25	<25	<25	**175**
1,4-Dioxane	<25	<25	<25	<25	<25	<25
cis-1,3-Dichloropropene	<25	<25	<25	<25	<25	<25
trans-1,3-Dichloropropene	<25	<25	<25	<25	<25	<25
1,1,2-Trichloroethane	<25	<25	<25	<25	<25	<25
Toluene	<25	<25	<25	<25	<25	**45**
1,3-Dichloropropane	<25	<25	<25	<25	<25	<25
1,2-Dibromoethane (EDB)	<25	<25	<25	<25	<25	<25
Tetrachloroethene	<25	<25	<25	**75**	**122**	**29**
1,1,1,2-Tetrachloroethane	<25	<25	<25	<25	<25	<25
Chlorobenzene	<25	<25	<25	<25	<25	<25
Ethylbenzene	<25	<25	<25	<25	<25	<25
p & m-Xylene	<25	<25	<25	<25	<25	<25
Bromoform	<25	<25	<25	<25	<25	<25
1,1,2,2-Tetrachloroethane	<25	<25	<25	<25	<25	<25
o-Xylene	<25	<25	<25	<25	<25	**35**
1,2,3-Trichloropropane	<25	<25	<25	<25	<25	<25
Isopropylbenzene	<25	<25	<25	<25	<25	<25
1,3,5-Trimethylbenzene	<25	<25	<25	<25	<25	<25
1,2,4-Trimethylbenzene	<25	<25	<25	<25	<25	<25
1,3-Dichlorobenzene	<25	<25	<25	<25	<25	<25
1,4-Dichlorobenzene	<25	<25	<25	<25	<25	<25
1,2-Dichlorobenzene	<25	<25	<25	<25	<25	<25
n-Butylbenzene	<25	<25	<25	<25	<25	<25
1,2,4-Trichlorobenzene	<25	<25	<25	<25	<25	<25
Naphthalene	<25	<25	<25	<25	<25	<25
1,2,3-Trichlorobenzene	<25	<25	<25	<25	<25	<25

Results in nanograms (ng). J = Estimated value below reported quantitation level. B = Detected in method blank.

Table 1

Beacon Environmental Services, Inc.
323 Williams Street, Ste. D
Bel Air, MD 21014

Analysis by EPA Method 8260B (Modified)

Client Sample ID:	P-22	P-23
Project Number:	PSG1872	PSG1872
Lab File ID:	06021627	06021628
Received Date:	2/16/2006	2/16/2006
Analysis Date:	2/17/2006	2/17/2006
Analysis Time:	0:11	0:42
Units:	ng/trap	ng/trap
COMPOUNDS		
1,1-Dichloroethene	<25	<25
1,1,2-Trichlorotrifluoroethane	<25	<25
trans-1,2-Dichloroethene	<25	<25
Methyl-t-butyl Ether	<25	<25
1,1-Dichloroethane	<25	79
cis-1,2-Dichloroethene	<25	<25
Chloroform	<25	<25
2,2-Dichloropropane	<25	<25
1,2-Dichloroethane	<25	<25
1,1,1-Trichloroethane	71	1,698
1,1-Dichloropropene	<25	<25
Carbon Tetrachloride	<25	<25
Benzene	<25	38
1,2-Dichloropropane	<25	<25
Trichloroethene	<25	36
1,4-Dioxane	<25	<25
cis-1,3-Dichloropropene	<25	<25
trans-1,3-Dichloropropene	<25	<25
1,1,2-Trichloroethane	<25	<25
Toluene	28	56
1,3-Dichloropropane	<25	<25
1,2-Dibromoethane (EDB)	<25	<25
Tetrachloroethene	148	<25
1,1,1,2-Tetrachloroethane	<25	<25
Chlorobenzene	<25	<25
Ethylbenzene	<25	<25
p & m-Xylene	<25	42
Bromoform	<25	<25
1,1,2,2-Tetrachloroethane	<25	<25
o-Xylene	<25	59
1,2,3-Trichloropropane	<25	<25
Isopropylbenzene	<25	<25
1,3,5-Trimethylbenzene	<25	<25
1,2,4-Trimethylbenzene	<25	103
1,3-Dichlorobenzene	<25	<25
1,4-Dichlorobenzene	<25	<25
1,2-Dichlorobenzene	<25	<25
n-Butylbenzene	<25	<25
1,2,4-Trichlorobenzene	<25	<25
Naphthalene	<25	<25
1,2,3-Trichlorobenzene	<25	<25

Results in nanograms (ng). J = Estimated value below reported quantitation level. B = Detected in method blank.

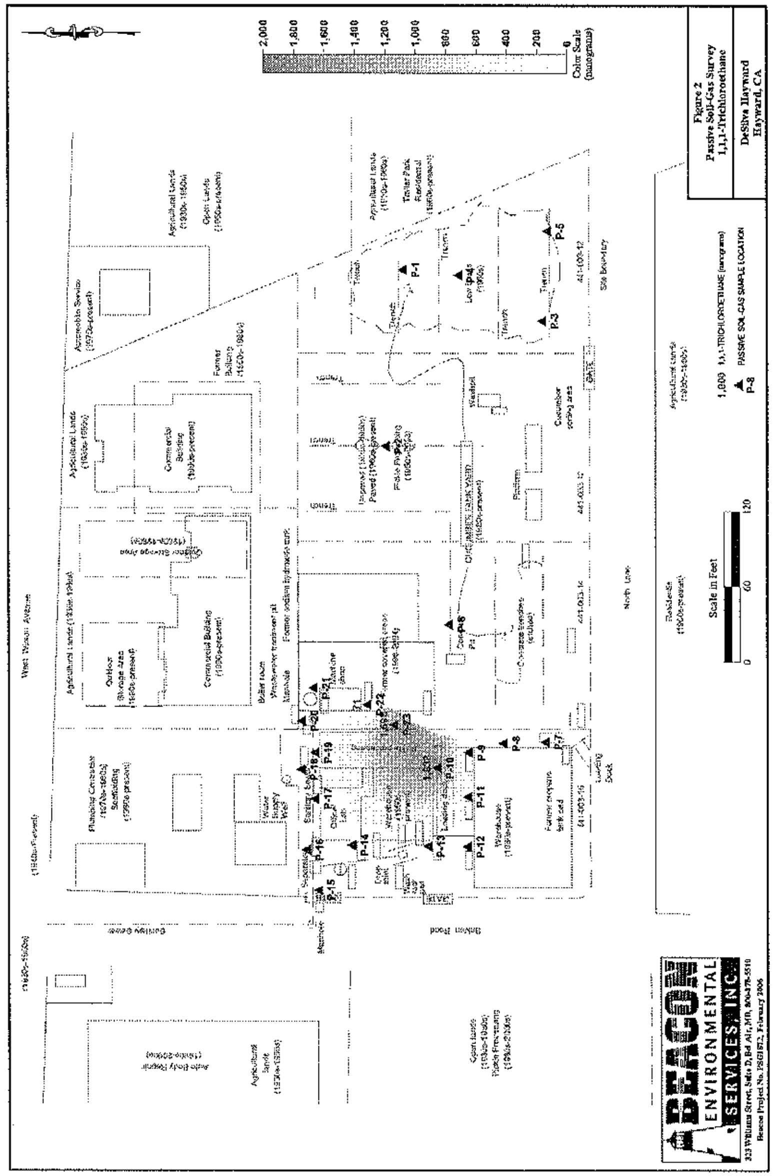

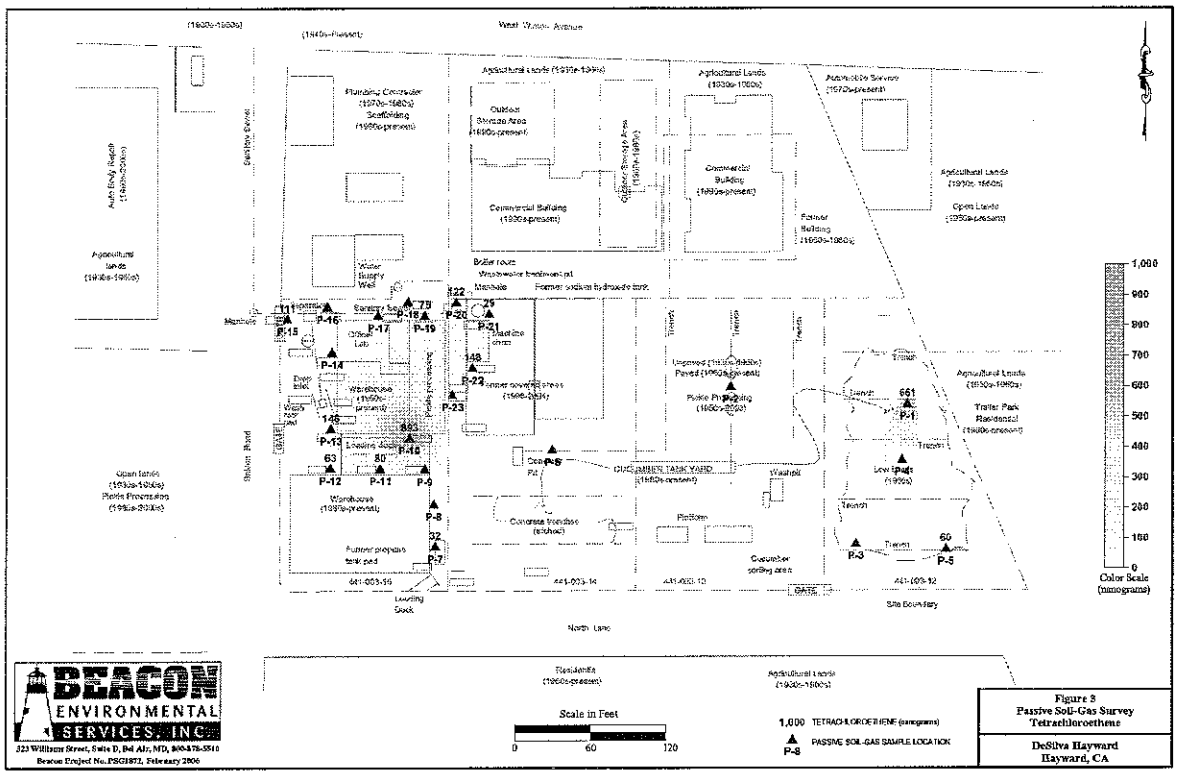

BEACON ENVIRONMENTAL SERVICES, INC.
323 William Street, Suite D, Bel Air, MD, 800-878-5510
Beacon Project No. PSC1872, February 2006

Figure 3
Passive Soil-Gas Survey
Tetrachloroethene

DeSilva Hayward
Hayward, CA

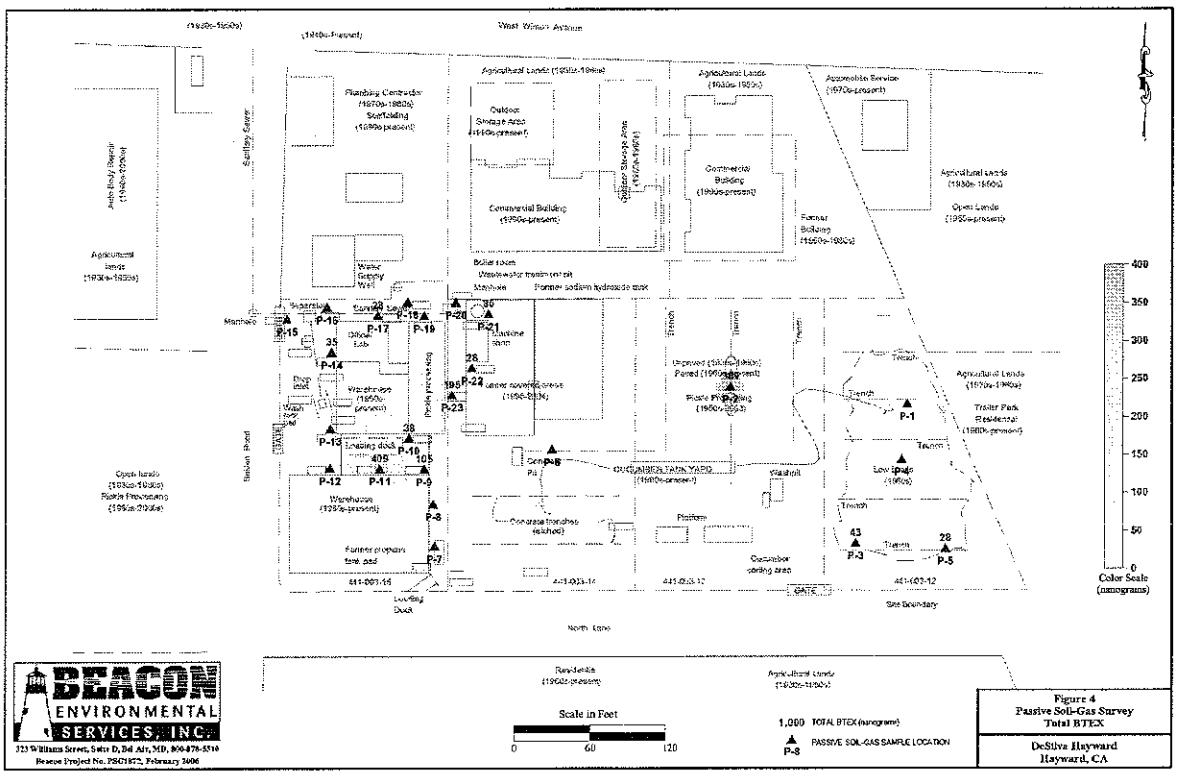

BEACON ENVIRONMENTAL SERVICES, INC.
323 William Street, Suite D, Bel Air, MD, 800-878-5510
Beacon Project No. PSC1872, February 2006

Figure 4
Passive Soil-Gas Survey
Total BTEX

DeSilva Hayward
Hayward, CA

Attachments

Attachment 1

FIELD PROCEDURES FOR PASSIVE SOIL-GAS SURVEYS

The following field procedures are routinely used during a BEACON Passive Soil-Gas Survey. Modifications can be and are incorporated from time to time in response to individual project requirements. In all instances, BEACON adheres to EPA-approved Quality Assurance and Quality Control practices.

A. Field personnel carry system components and support equipment to the site and deploy the passive samplers in a prearranged survey pattern. A passive sampler consists of a glass vial containing hydrophobic adsorbent cartridges with a length of wire attached to the vial for retrieval. Although samplers require only one person for emplacement and retrieval, the specific number of field personnel required depends upon the scope and schedule of the project. Each Sampler emplacement generally takes less than two minutes.

B. At each survey point a field technician clears vegetation as needed and, using a slide hammer with a ½″ diameter probe or a hammer drill with a ½″ diameter bit, creates a hole three-feet deep. The technician then uses a hammer and a ¾″ diameter pointed metal stake to widen the top four inches of the hole. [Note: For locations covered with asphalt, concrete, or gravel surfacing, the field technician first drills a 1″- to 1½″-diameter hole through the surfacing to the soils beneath and the hole is sleeved with a ¾″ i.d. metal sleeve.]

C. The technician then removes the solid plastic cap from a sampler and replaces it with a Sampling Cap (a plastic cap with a hole covered by screen meshing). The technician inserts the sampler, with the Sampling Cap end facing down, into the hole (**see attached figure**). The sampler is then covered with either local soils for uncapped locations or, for capped locations, aluminum foil and a concrete patch. The sampler's location, time and date of emplacement, and other relevant information are recorded on the Field Deployment Form.

D. One or more trip blanks are included as part of the quality-control procedures.

E. Once all the samplers have been deployed, field personnel schedule sampler recovery and depart, taking all other equipment and materials with them.

F. Field personnel retrieve the samplers at the end of the exposure period. At each location, a field technician withdraws the sampler from its hole, removes the retrieval wire, and wipes the outside of the vial clean using gauze cloth; following removal of the Sampling Cap, the threads of the vial are also cleaned. A solid plastic cap is screwed onto the vial and the sample location number is written on the label. The technician then records sample-point location, date, time, etc. on the Field Deployment Form.

G. Sampling holes are refilled with soil, sand, or other suitable material. If samplers have been installed through asphalt or concrete, the hole is filled to grade with a plug of cold patch or cement.

H. Following retrieval, field personnel ship or carry the passive samplers to BEACON's laboratory.

BEACON PASSIVE SAMPLER

DEPLOYMENT THROUGH SOILS

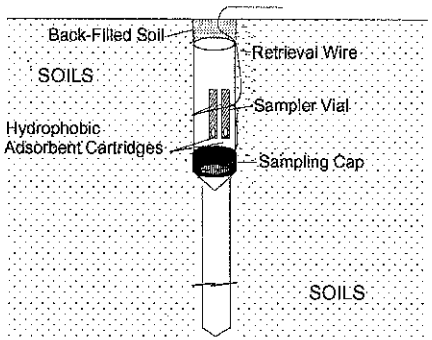

DEPLOYMENT THROUGH AN ASPHALT/CONCRETE CAP

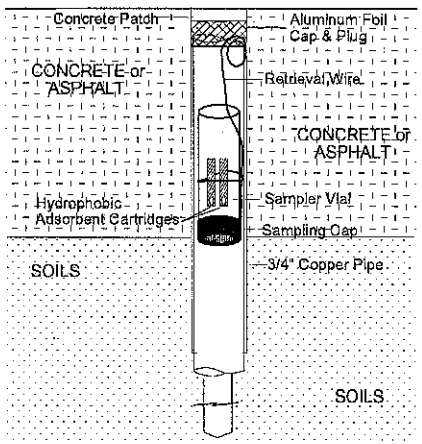

Attachment 2

Field Deployment Report

PASSIVE SOIL-GAS SURVEY
FIELD DEPLOYMENT REPORT

Project Information	
Beacon Project No.:	1872
Site Name:	Desilva Hayward
Site Location:	California

BEACON ENVIRONMENTAL SERVICES, INC.
323 Williams Street, Suite D, Bel Air, MD 21014, 800-878-5510

Client Information	
Company Name:	West, Inc.
Office Location:	San Rafael, CA
Samples Collected By:	SS/RM

FIELD SAMPLE ID	Date Emplaced / Time Emplaced	Date Retrieved / Time Retrieved	FIELD NOTES (e.g., asphalt/concrete covering, description of sample location, sampling hole depth, cartridge/vial condition)
	1/25/06	2/15/06	All holes drilled to 12-inches from ground surface.
P-1	12:15	1052	Concrete - 6 inches; 1-inch bentonite + 3mm concrete seal.
P-2	12:10	1044	Concrete - 1 inche with 0.5 inch overlying dirt "
P-3	12:24	1118	Concrete - 6 inches; 1-inch bentonite + 3mm concrete seal
P-4	12:18	1100	Concrete - 6 inches; "
P-5	12:21	1108	Concrete - 6 inches; "
P-6	12:06	1035	Concrete - 4 inches; "
P-7	12:02	1129	Concrete - 7 inches; "
P-8	11:59	1138	Concrete - 4.5 inches; "
P-9	11:56	1149	Concrete - 6 inches; "
P-10/PDD	11:28	1158	Concrete - 8 inches; "
P-11	11:52	1207	Concrete - 6 inches; "
P-12	11:49	1217	Concrete - 6.5 inches; "
P-13	11:31	0830	Concrete - 7 inches; "
P-14	11:42	0845	Asphalt - 6 inches; "
P-15	10:38	0900	Asphalt - 1.5 inches; "

PASSIVE SOIL-GAS SURVEY
FIELD DEPLOYMENT REPORT

FIELD SAMPLE ID	Date Emplaced / Time Emplaced	Date Retrieved / Time Retrieved	FIELD NOTES (e.g., asphalt/concrete covering, description of sample location, cartridge/vial condition)
	1-25-06	2/15/06	All holes drilled to 12-inches from ground surface.
P-16	10:53	0915	Asphalt for 1.5 inches; 1-inch bentonite + 3mm concrete patch.
P-17	10:59	0926	Concrete for 0.5 inches; 1inch bentonite seal + 3mm concrete patch
P-18	11:04	0937	Concrete - 6 inches; " "
P-19	11:09	0947	Asphalt - 4 inches; " "
P-20	11:15	0958	Concrete - 7 inches; " "
P-21	11:18	1008	Concrete - 5 inches; " "
P-22	11:20	1017	Concrete - 7 inches; " "
P-23	11:23	1026	Concrete - 6.5 inches; " "

BEACON ENVIRONMENTAL SERVICES, INC.

Attachment 3

LABORATORY PROCEDURES
FOR PASSIVE SOIL-GAS SAMPLES

Following are laboratory procedures used with BEACON Passive Soil-Gas Surveys, a screening technology for expedited site investigation. After exposure, adsorbent cartridges from the passive samplers are analyzed using U.S. EPA Method 8260B as described in the Solid Waste Manual (SW-846), a capillary gas chromatographic/mass spectrometric method, modified to accommodate high temperature thermal desorption of the adsorbent cartridges. This procedure is summarized as follows:

A. The adsorbent cartridges are loaded with internal standards and surrogates prior to loading the autosampler with the cartridges. The loaded cartridges are purged in a helium flow. Then the cartridges are thermally desorbed in a helium flow onto a focusing trap. Any analytes in the helium stream are adsorbed onto a focusing trap.

B. Following trap focusing, the trap is thermally desorbed onto a DB-VRX 60m, 0.25 mm ID, 1.40 micron filament thickness capillary column.

C. The GC/MS is scanned between 35 and 270 Atomic Mass Units (AMU) at 3.12 scans per second.

D. BFB tuning criteria and the initial five-point calibration procedures are those stated in method SW846-8260B. System performance and calibration check criteria are met prior to analysis of samples. A laboratory method blank is analyzed after the daily standard to determine that the system is contaminant-free.

E. The instrumentation used for these analyses includes:

- Agilent 6890-5973 Gas Chromatograph/Mass Spectrometer;
- Markes Unity thermal desorber;
- Markes UltrA autosampler; and
- Markes Mass Flow Controller Module.

Attachment 4

Chain-of-Custody Form

CHAIN-OF-CUSTODY
PASSIVE SOIL-GAS SAMPLES

Project Information	
Beacon Project No.:	1872
Site Name:	Desilva Hayward
Site Location:	California
Analytical Method:	EPA Method 8260B
Target Compounds:	VOCs, 1,4-Dioxane

BEACON ENVIRONMENTAL SERVICES, INC.
323 Williams Street, Suite D, Bel Air, MD 21014, 800-878-5510

Client Information	
Company Name:	WEST, Inc.
Office Location:	San Rafael, CA
Samples Submitted By:	Robin Mock
Contact Phone No.:	(415) 460-6770

Field Sample ID	Lab Sample ID (for lab use only)		Comments (only necessary if problem or discrepancy) Condition of sample or vial	Date	Time	Initial
Trip-1	1872	Trip-1				
P-1	1872	P-1	bugs inside vial	2/13/06	1052	RM
P-2	1872	P-2				
P-3	1872	P-3	wire disintegrating during retrieval, inside cap rusty	2/15/06	1118	RM
P-4	1872	P-4				
P-5	1872	P-5				
P-6	1872	P-6				
P-7	1872	P-7				
P-8	1872	P-8				
P-9	1872	P-9				
P-10 same	1872	P-10				
P-10D sample	1872	P-10 D				
P-11	1872	P-11	Fine particles inside vial	2/15/06	1207	RM
P-12	1872	P-12				
P-13	1872	P-13				
P-14	1872	P-14				
P-15	1872	P-15				
P-16	1872	P-16				
P-17	1872	P-17				
P-18	1872	P-18				
P-19	1872	P-19				

Shipment of Field Kit to Site — Custody Seal # 00414322 Intact? (Y) N

Relinquished by:	Date/Time	Courier	Received by:	Date/Time
Steven Thornley	01.19.2006/1700	FEDEX		

Shipment of Field Kit to Laboratory — Custody Seal # 00414334 Intact? (Y) N

Relinquished by:	Date/Time	Courier	Received by:	Date/Time
[illegible]	2/15/06 @ 1300	FEDEX	Ryan Schmidt	2-16-2006 / 0930

CHAIN-OF-CUSTODY
PASSIVE SOIL-GAS SAMPLES

Project Information	
Beacon Project No.:	1872
Site Name:	Desilva Hayward
Site Location:	California
Analytical Method:	EPA Method 8260B
Target Compounds:	VOCs, 1,4-Dioxane

BEACON ENVIRONMENTAL SERVICES, INC.
323 Williams Street, Suite D, Bel Air, MD 21014, 800-878-5510

Client Information	
Company Name:	WEST, Inc.
Office Location:	San Rafael, CA
Samples Submitted By:	Robin Mock
Contact Phone No.:	(415) 460-6770

Field Sample ID	Lab Sample ID (for lab use only)		Comments (only necessary if problem or discrepancy) Condition of sample or vial	Date	Time	Initial
P-20	1872	P-20				
P-21	1872	P-21				
P-22	1872	P-22				
P-23	1872	P-23				

Shipment of Field Kit to Site — Custody Seal # 00414322 Intact? (Y) N

Relinquished by:	Date/Time	Courier	Received by:	Date/Time
Steven Thornley	01.19.2006/1700	FEDEX		

Shipment of Field Kit to Laboratory — Custody Seal # 00414334 Intact? (Y) N

Relinquished by:	Date/Time	Courier	Received by:	Date/Time
[illegible]	2/15/06 @ 1300	FEDEX	Ryan Schmidt	2-16-2006 / 0930